YANMAR
SERVICE MANUAL

MARINE DIESEL ENGINE

MODEL

2QM20(H)
3QM30(H)

FOREWORD

This service manual has been compiled for engineers engaged in sales, service, inspection and maintenance. Accordingly, descriptions of the construction and functions of the engine are emphasized in this manual while items which should already be common knowledge are omitted.

One characteristic of a marine diesel engine is that its performance in a vessel is governed by its applicability to the vessel's hull construction and its steering system.

Engine installation, fitting out and propeller selection have a substantial effect on the performance of the engine and the vessel. Moreover, when the engine runs unevenly or when trouble occurs, it is essential to check a wide range of operating conditions—such as installation on the hull and suitability of the ship's piping and propeller—and not just the engine itself. To get maximum performance from this engine, you should completely understand its functions, construction and capabilities, as well as proper use and servicing.

Use this manual as a handy reference in daily inspection and maintenance, and as a text for engineering guidance.

Model 2QM20(H)·3QM30(H)

CHAPTER 1 GENERAL
1. Exterior Views 1-1
2. Specifications 1-5
3. Principal Construction 1-7
4. Performance Curves 1-8
5. Features 1-10
6. Engine Cross-Section 1-11
7. Dimensions 1-15
8. System Diagrams 1-24
9. Accessories 1-37
10. Recommended Remote Control Cable 1-39

CHAPTER 2 BASIC ENGINE
1. Cylinder Block 2-1
2. Cylinder Liner 2-3
3. Cylinder Head 2-6
4. Piston 2-19
5. Connecting Rod 2-23
6. Crankshaft 2-26
7. Camshaft 2-34
8. Timing Gear 2-37

CHAPTER 3 FUEL SYSTEM
1. Construction 3-1
2. Injection Pump 3-3
3. Injection Valve 3-15
4. Fuel Filter 3-19
5. Fuel Feed Pump 3-20
6. Fuel Tank (Option) 3-21

CHAPTER 4 GOVERNOR
1. Governor 4-1
2. Injection Limiter 4-5
3. No-Load Maximum Speed Limiter 4-7
4. Idling Adjuster 4-8

CHAPTER 5 INTAKE AND EXHAUST SYSTEM
1. Intake and Exhaust System 5-1
2. Intake Silencer 5-3
3. Exhaust System 5-4
4. Breather Pipe 5-5
5. Intake Manifold [3QM30(H)] 5-6

CHAPTER 6 LUBRICATION SYSTEM
1. Lubrication System 6-1
2. Oil Pump 6-6
3. Oil Filter 6-9
4. Oil Pressure Regulator Valve 6-10
5. Oil Pressure Measurement 6-11

CHAPTER 7 COOLING SYSTEM
A. Sea water cooling [For model 2QM20(H), 3QM30(H)]
1. Cooling System 7-A-1
2. Water Pump and Bilge Pump (Option) 7-A-4
3. Thermostat 7-A-7
4. Anticorrosion Zinc 7-A-8
5. Kingston Cock 7-A-9
6. Bilge Strainer 7-A-10

B. Fresh water cooling [For model 2QM20Y(F), 3QM30Y(F)]
1. Cooling System 7-B-1
2. Fresh Water Pump 7-B-3
3. Fresh Water Tank 7-B-6
4. Filler Cap and Subtank (Option) 7-B-9
5. Thermostat 7-B-11
6. Anticorrosion Zinc 7-B-13
7. Precautions 7-B-14

CHAPTER 8 CHAIN-OVERDRIVE HAND-OPERATED SYSTEM
1. Chain-Overdrive Hand-Operated System 1

CHAPTER 9 REDUCTION AND REVERSING GEAR
A. For model 2QM20, 3QM30
1. Construction 9-A-1
2. Installation and Operation 9-A-8
3. Handling the Reduction and Reversing Gears 9-A-9
4. Inspection and Servicing 9-A-10
5. Disassembly 9-A-12
6. Reassembly 9-A-15

B. For model 2QM20H
1. Construction 9-B-1
2. Installation 9-B-5
3. Operation and Maintenance 9-B-6
4. Inspection and Servicing 9-B-7
5. Disassembly 9-B-12
6. Reassembly 9-B-16

C. For model 3QM30H
1. Construction 9-C-1
2. Installation 9-C-5
3. Operation and Maintenance 9-C-6
4. Inspection and Servicing 9-C-7
5. Disassembly 9-C-12
6. Reassembly 9-C-15

CHAPTER 10 REMOTE CONTROL SYSTEM
1. Construction 10-1
2. Clutch and Speed Regulator Remote Control 10-3
3. Decompression Remote Control 10-7
4. Engine Stop Remote Control 10-8

CHAPTER 11 ELECTRICAL SYSTEM
1. Composition 11-1
2. Battery 11-3
3. Starter Motor 11-6
4. Alternator 11-17
5. Alarm Circuit 11-27

CHAPTER 12 INSTALLATION AND FITTING
1. Propeller Selection 12-1
2. Engine Installation 12-4
3. Stern Equipment 12-17
4. Interior Piping and Wiring 12-21
5. Front Power Take-Off 12-27

CHAPTER 13 OPERATING INSTRUCTIONS
1. Fuel Oil and Lubricating Oil 13-1
2. Engine Operating Instructions 13-8
3. Troubleshooting and Repair 13-13

CHAPTER 14 DISASSEMBLY AND REASSEMBLY
1. Disassembly and Reassembly Precautions 14-1
2. Disassembly and Reassembly Tools 14-2
3. Other 14-16
4. Disassembly 14-17
5. Reassembly 14-25
6. Tightening Torque 14-31
7. Packing Supplement and Adhesives 14-33

CHAPTER 15 INSPECTION AND SERVICING
1 Periodic Inspection and Servicing 15-1

CHAPTER 1

GENERAL

1. Exterior Views 1-1
2. Specifications 1-5
3. Principal Construction 1-7
4. Performance Curves 1-8
5. Features 1-10
6. Engine Cross-Section 1-11
7. Dimensions 1-15
8. System Diagrams 1-24
9. Accessories 1-37
10. Recommended Remote Control Cable 1-39

1. Exterior Views

1-1 2QM20H

1-1.1 Intake side viewed from stern

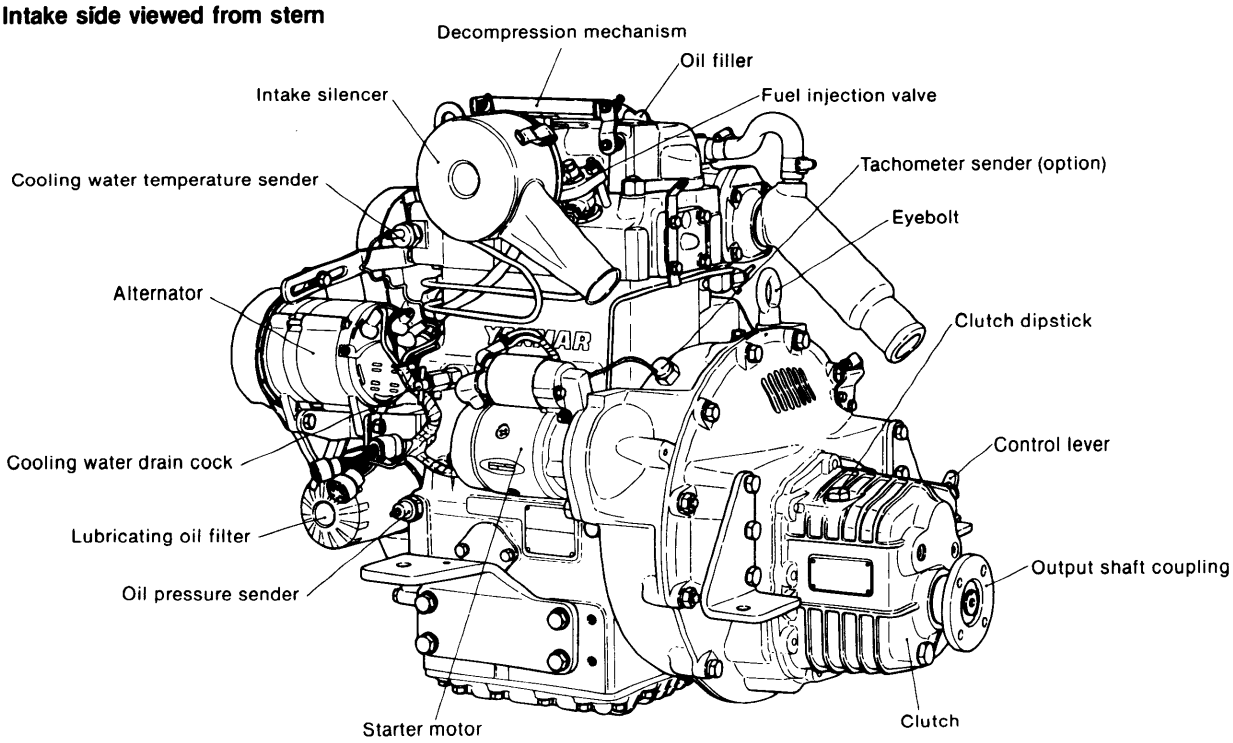

1-1.2 Exhaust side viewed from bow

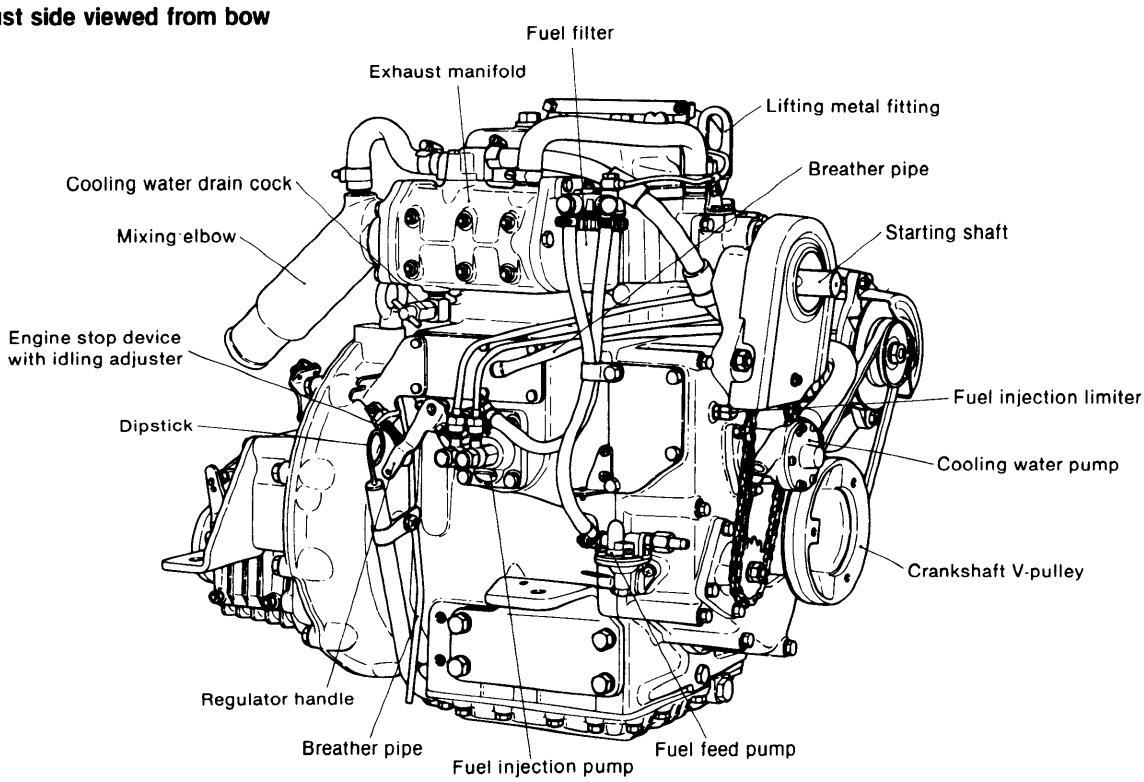

1-2 2QM20Y

1-2.1 Intake side viewed from stern

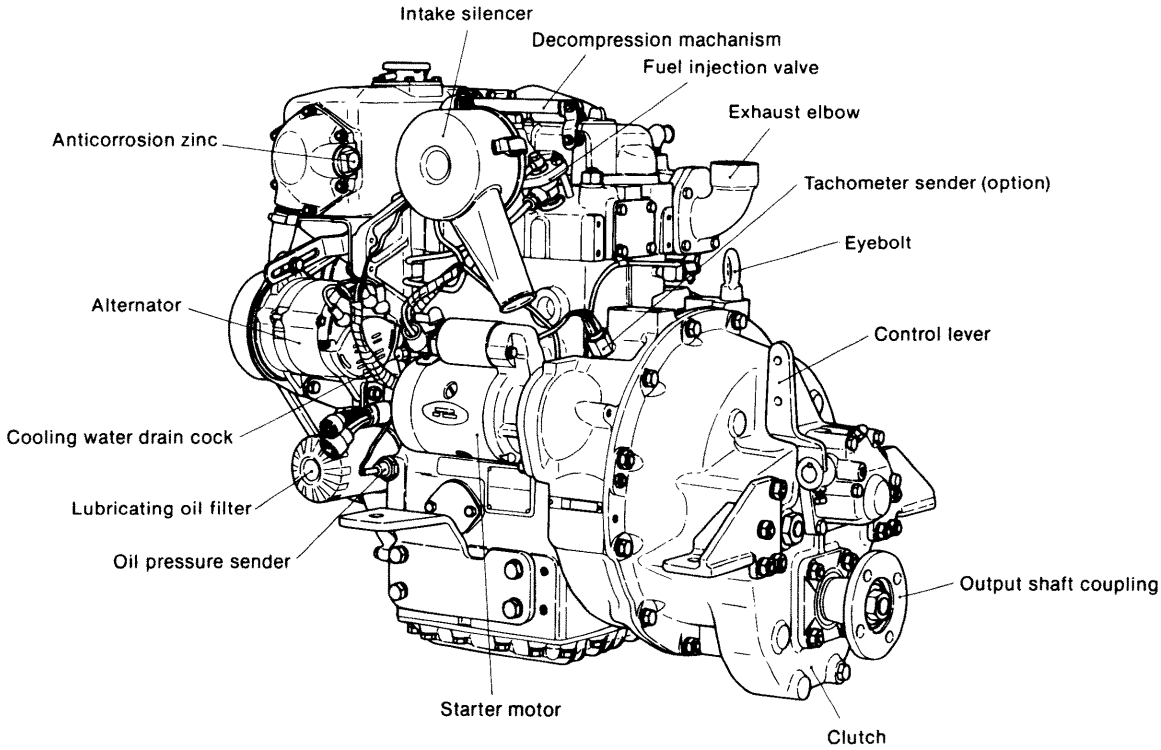

1-2.2 Exhaust side viewed from bow

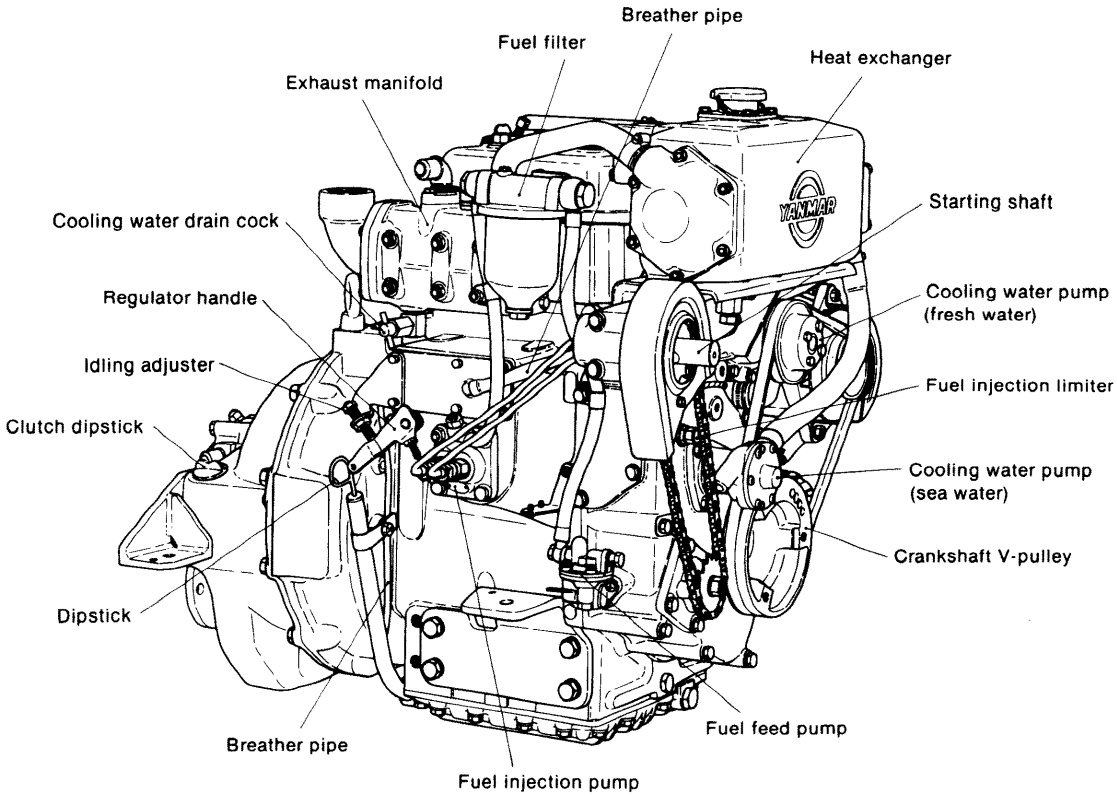

1-3 3QM30H

1-3.1 Intake side viewed from stern

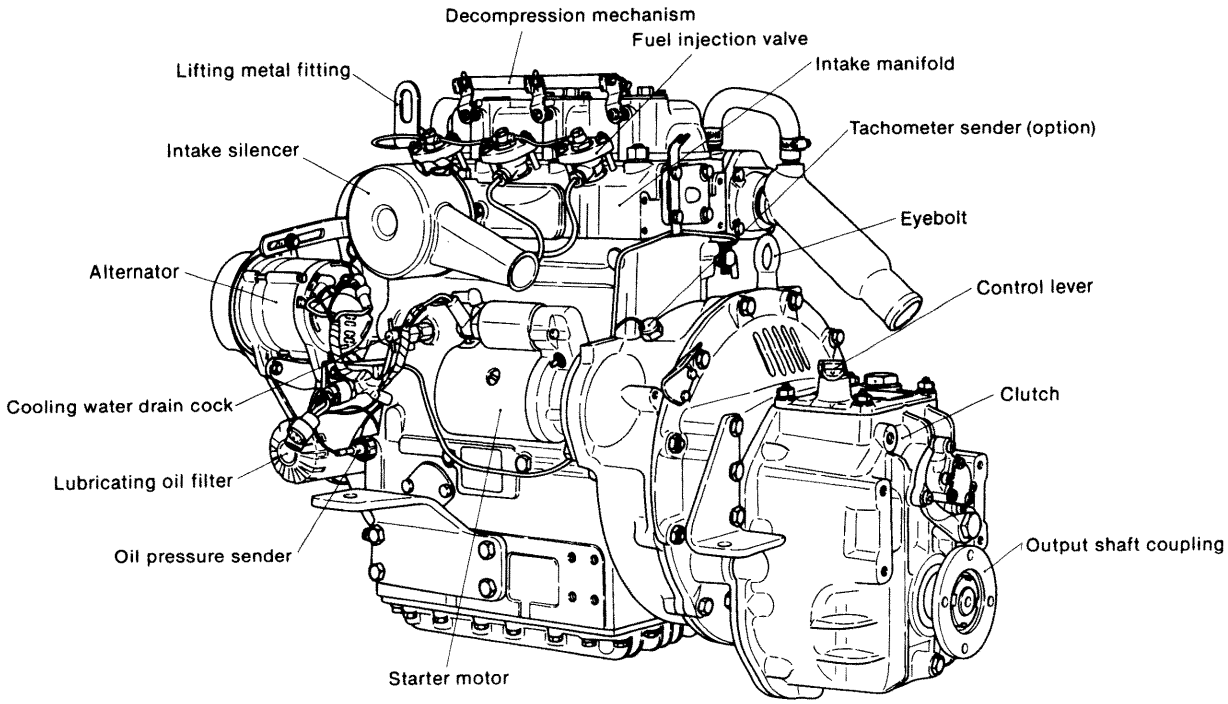

1-3.2 Exhaust side viewed from bow

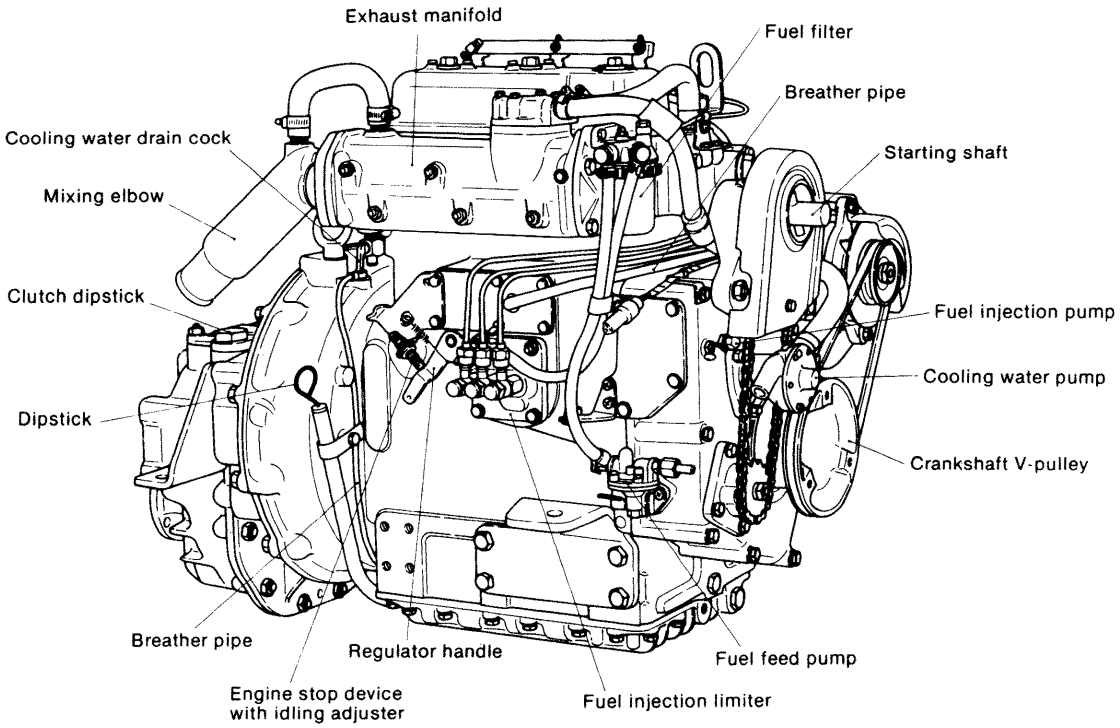

1-4 3QM30Y

1-4.1 Intake side viewed from stern

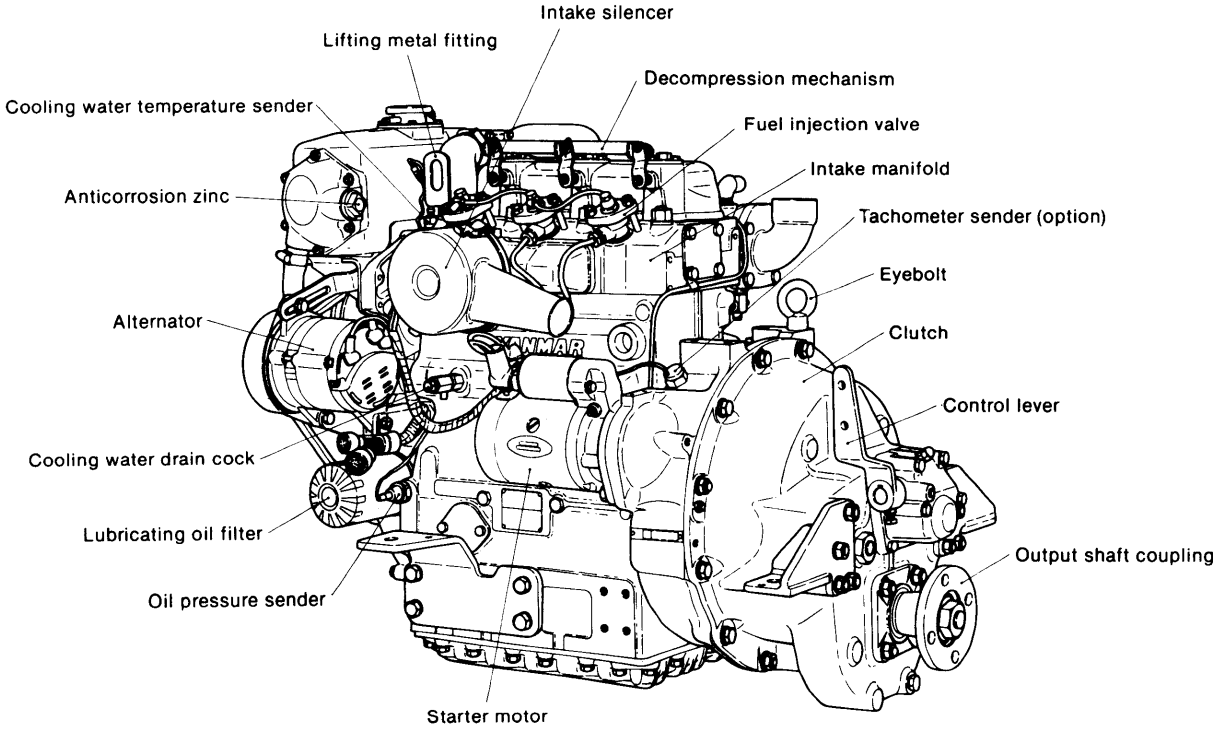

1-4.2 Exhaust side viewed from bow

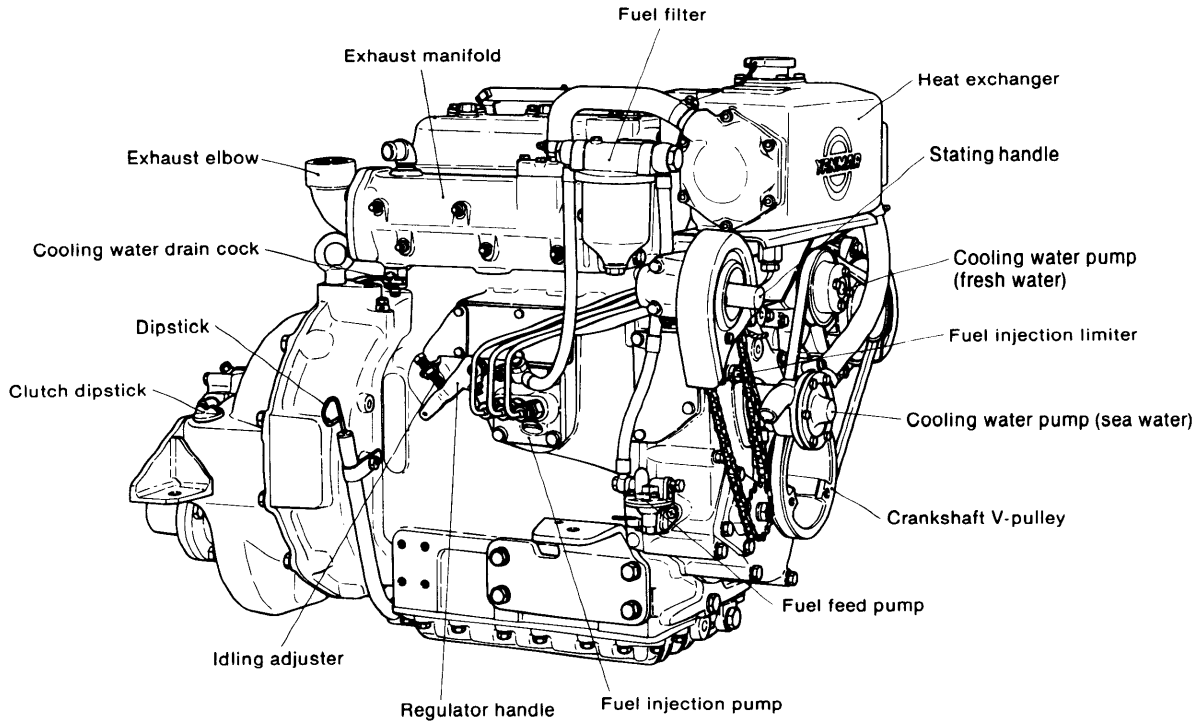

2. Specifications

Model			2QM20[2QM20B]		2QM20H		2QM20Y		2QM20F	
Type			Vertical 4-cycle water cooled diesel engine							
Combustion chamber			Swirl pre-combustion chamber							
Number of cylinders			2							
Bore × stroke		mm	88 × 90							
Displacement		cc	1094							
Continuous rating output (DIN6270A)	Output/Crankshaft speed	HP/rpm	20/2600							
	Brake mean effective pressure	kg/cm²	6.33							
	Piston speed	m/sec.	7.80							
	Propeller speed (Ahead)	rpm	1182	810	1215	919	1182	810	1215	919
One hour rating output (DIN6270B)	Output/crankshaft speed	HP/rpm	22/2800							
	Brake mean effective pressure	kg/cm²	6.46							
	Piston speed	m/sec.	8.40							
	Propeller speed (Ahead)	rpm	1273	872	1308	989	1273	872	1308	989
Compression ratio			20:1							
Fuel injection timing		degree	bTDC 25							
Fuel injection pressure		kg/cm²	160±10							
Engine weight (dry)		kg	220		190		260		230	
Main power take off			at Flywheel side							
Front power take off			at Crankshaft V-pulley side							
Direction of rotation	Crankshaft		Counter-clockwise viewed from stern							
	Propeller shaft		Clockwise viewed from stern							
Cooling system			Direct sea water cooling				Fresh water cooling			
Lubrication system			Complete enclosed forced lubrication							
Starting system			Electric and/or manual							
Reduction gear system			Constant-mesh spur gear		Constant-mesh helical gear		Constant-mesh spur gear		Constant-mesh helical gear	
Clutch	Type of clutch		Mechanical wet type single disc		Mechanical wet type multi disc		Mechanical wet type single disc		Mechanical wet type multi disc	
	Model		YP-7M[YP-10M]		KBW10A		YP-10M		KBW10A	
Reduction ratio	Ahead		2.20	3.21	2.14	2.83	2.20	3.21	2.14	2.83
	Astern		2.30	3.46	2.50		2.30	3.46	2.50	
Dimensions	Overall length	mm	825 [810]		821.5		810		821.5	
	Overall height	mm	675 [673]		665		714		706	
	Overall width	mm	501		501		562		562	
Lubricating oil capacity	Total	ℓ	5.1							
	Effective	ℓ	3.3							
	Clutch	ℓ	0.8 [1.2]		*0.6		1.2		*0.6	

Model YP-7M clutch equipped on 2QM20 will be changed to model YP-10M, which is a standard clutch for 3QM30. Please notice that YP-10M clutch is equipped on "2QM20B".
The engine output of model "2QM20B" is the same output as model 2QM20.

Model			3QM30		3QM30H		3QM30Y		3QM30F	
Type			Vertical 4-cycle water cooled diesel engine							
Combustion chamber			Swirl pre-combustion chamber							
Number of cylinders			3							
Bore × stroke		mm	88 × 90							
Displacement		cc	1642							
Continuous rating output (DIN6270A)	Output/Crankshaft speed	HP/rpm	30/2600							
	Brake mean effective pressure	kg/cm²	6.32							
	Piston speed	m/sec.	7.80							
	Propeller speed (Ahead)	rpm	1182	810	1281	867	1182	810	1281	867
One hour rating output (DIN6270B)	Output/crankshaft speed	HP/rpm	33/2800							
	Brake mean effective pressure	kg/cm²	6.46							
	Piston speed	m/sec.	8.40							
	Propeller speed (Ahead)	rpm	1273	872	1379	933	1273	872	1379	933
Compression ratio			20:1							
Fuel injection timing		degree	bTDC 28							
Fuel injection pressure		kg/cm²	160±10							
Engine weight (dry)		kg	280		260		310		290	
Main power take off			at Flywheel side							
Front power take off			at Crankshaft V-pulley side							
Direction of rotation	Crankshaft		Counter-clockwise viewed from stern							
	Propeller shaft		Clockwise viewed from stern							
Cooling system			Direct sea water cooling				Fresh water cooling			
Lubrication system			Complete enclosed forced lubrication							
Starting system			Electric and/or manual							
Reduction gear system			Constant-mesh spur gear		Constant-mesh helical gear		Constant-mesh spur gear		Constant-mesh helical gear	
Clutch	Type of clutch		Mechanical wet type single disc		Mechanical wet type multi disc		Mechanical wet type single disc		Mechanical wet type multi disc	
	Model		YP-10M		KH18		YP-10M		KH18	
Reduction ratio	Ahead		2.20	3.21	2.13	3.00	2.20	3.21	2.13	3.00
	Astern		2.30	3.46	1.96	3.06	2.30	3.46	1.96	3.06
Dimensions	Overall length	mm	924		952.5		924		966.5	
	Overall height	mm	673		692		714		733	
	Overall width	mm	501		501		562		562	
Lubricating oil capacity	Total	ℓ	6.5							
	Effective	ℓ	2.2							
	Clutch	ℓ	1.2		*1.7		1.2		*1.7	

3. Principal Construction

Group	Part	Construction	2QM20 2QM20B	2QM20H	2QM20Y	2QM20F	3QM30	3QM30H	3QM30Y	3QM30F
	Cylinder block	Integrally-cast water jacket and crankcase	○	○	○	○	○	○	○	○
Engine block	Cylinder liner	Wet type coated with anticorrosion point	○	○	○	○	○	○	○	○
	Main bearing	Bearing housing type without intermediate bearing	○	○	○	○				
		Bearing housing type with intermediate bearing					○	○	○	○
	Oil sump	Bottom cover (Oil pan)	○	○	○	○	○	○	○	○
Intake and exhaust systems and valve mechanism	Cylinder head	Integrated two-cylinder	○	○	○	○				
		Integrated three-cylinder					○	○	○	○
	Intake and exhaust valves	Poppet type, seat angle 90°	○	○	○	○	○	○	○	○
	Exhaust manifold	Integral water-cooled type	○	○	○	○	○	○	○	○
	Exhaust silencer	Water-cooled mixing elbow	○	○	○	○	○	○	○	○
	Valve mechanism	Overhead valve push rod, rocker arm system	○	○	○	○	○	○	○	○
	Intake silencer	Polyurethane filter, sound absorbing type	○	○	○	○	○	○	○	○
Main moving elements	Crankshaft	Stamped forging	○	○	○	○	○	○	○	○
	Flywheel	Cast iron with ring gear	○	○	○	○	○	○	○	○
	Piston	Oval type	○	○	○	○	○	○	○	○
	Piston pin	Full floating type	○	○	○	○	○	○	○	○
	Piston rings	3-cornpression rings, 1-oil ring	○	○	○	○	○	○	○	○
Lubrication system	Oil pump	Trochoid pump	○	○	○	○	○	○	○	○
	Oil filter	Full-flow, spin-on cartridge type	○	○	○	○	○	○	○	○
	Oil level gauge	Dipstick	○	○	○	○	○	○	○	○
Cooling system	Water pump	Rubber impeller type	○	○	○	○	○	○	○	○
	Thermostat	Wax pellet type	○	○	○	○	○	○	○	○
	Fresh water cooling	Heat exchanger			○	○			○	○
Bilge system	Bilge pump	Rubber impeller combined with cooling water pump	○	○	○	○	○	○	○	○
Fuel system	Fuel injection pump	Integral 2-cylinder type	○	○	○	○				
		Integral 3-cylinder type					○	○	○	○
	Fuel injection valve	Throttle type	○	○	○	○	○	○	○	○
	Fuel strainer	Paper element type	○	○	○	○	○	○	○	○
	Fuel feed pump	Mechanical camshaft driven	○	○	○	○	○	○	○	○
Governor	Governor	Centrifugal all speed mechanical type	○	○	○	○	○	○	○	○
Starting system	Electric	Pinion shift type starter motor	○	○	○	○	○	○	○	○
	Manual	Cranking handle with chain sprocket	○	○	○	○	○	○	○	○
Electrical system	Charger	Alternator with built-in IC regulator	○	○	○	○	○	○	○	○
Reduction reversing	Reduction gear	Constant mesh spur gear	○		○		○		○	
		Constant mesh helical gear		○		○		○		○
Clutch system	Clutch	Wet type single disc, mechanical	○		○		○		○	
		Wet type multi disc, mechanical		○		○		○		○
Remote control	Decompression	Boden wire	○	○	○	○	○	○	○	○
	Engine stop	Boden wire	○	○	○	○	○	○	○	○
	One-handle remote control	Speed and Clutch control		○		○		○		○
	Two-handle remote control	Speed control	○		○		○		○	
		Clutch control	○		○		○		○	
	Electric wiring	Extension wireharness	○	○	○	○	○	○	○	○

4. Performance Curves

4-1 2QM20(H)

Fuel consumption

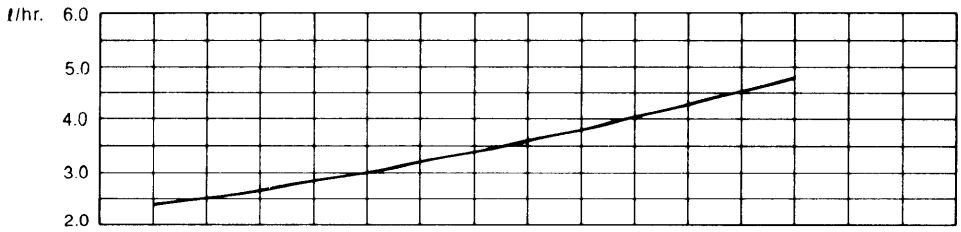

Specific fuel consumption

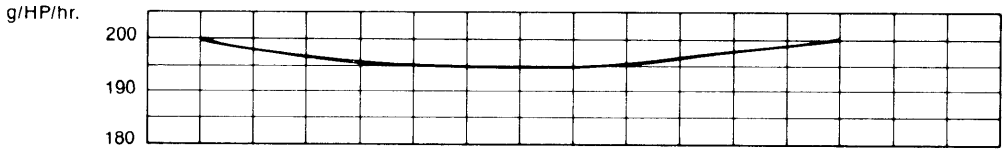

Torque

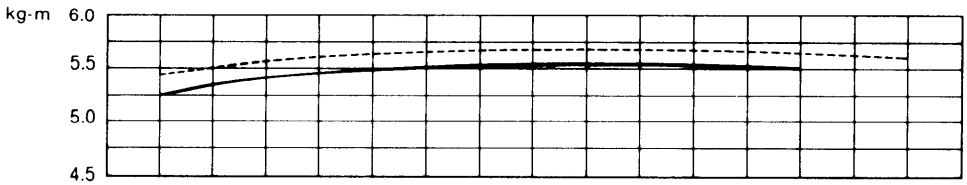

Output

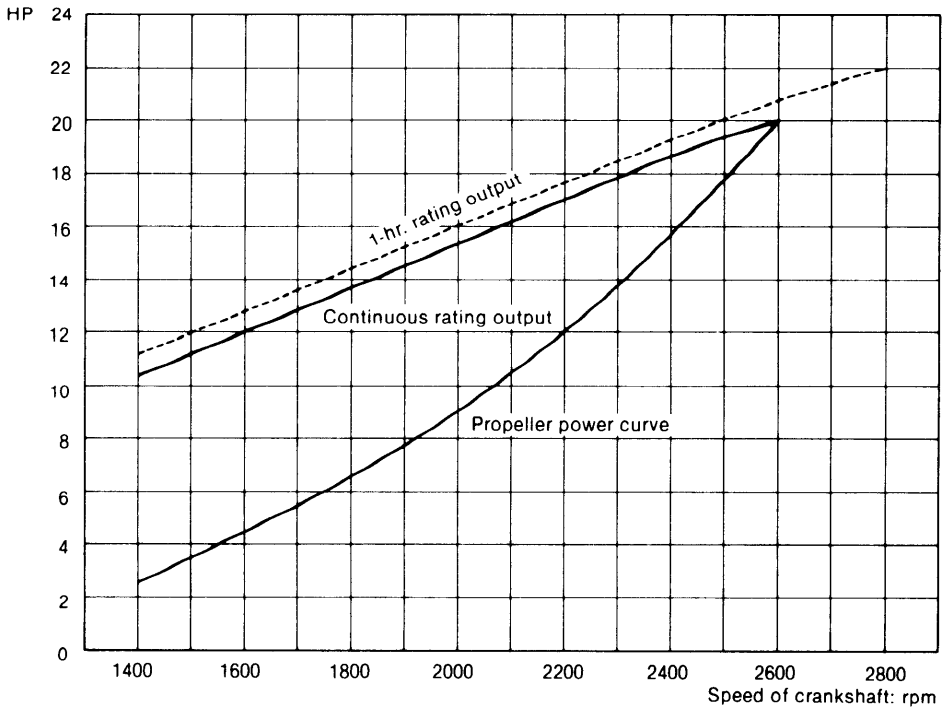

Note: These curves show the average performance of respective engines in test operation at our plant.

4-2 3QM30(H)

Fuel consumption

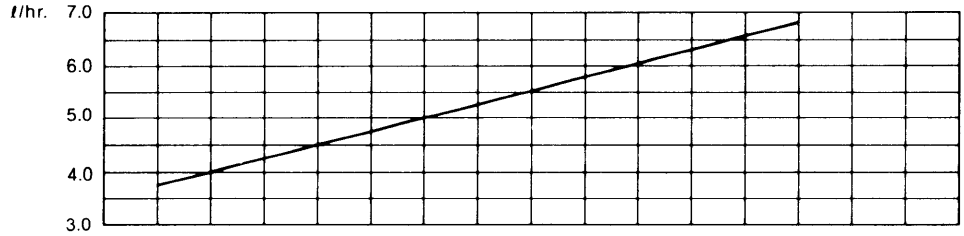

Specific fuel consumption

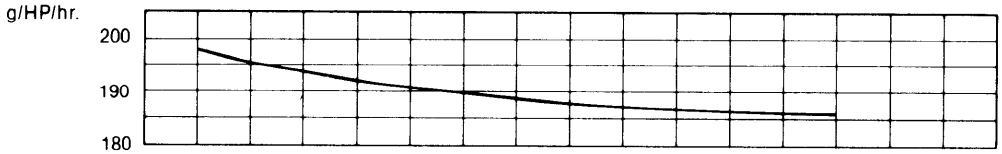

Torque

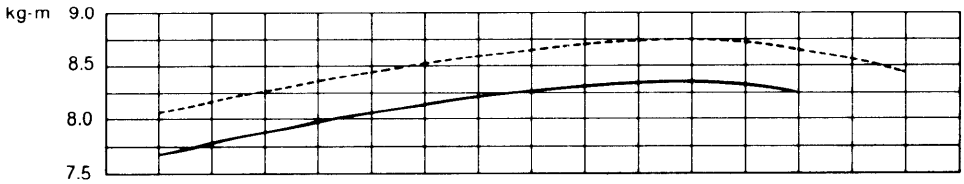

Output

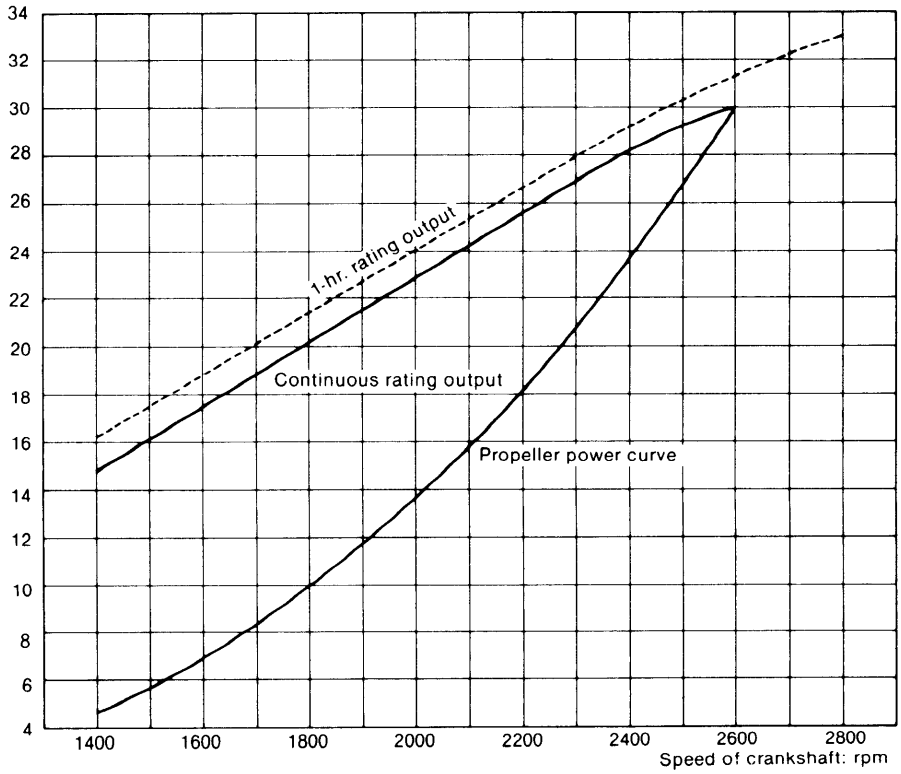

Note: These curves show the average performance of respective engines in test operation at our plant.

5. Features

1. Superior combustion performance
The unique Yanmar swirl precombustion chamber combustion system and new cooling system display superior combustion performance in all types of operation. Low-speed, low-load combustion performance, especially demanded for marine applications, is also superb, and stable performance is maintained over a wide range of speeds. Since starting characteristics are also excellent and warm-up is fast, full engine performance can be obtained within a short time.

2. Low operating costs
Excellent combustion and low friction reduce fuel costs, while the optimized piston shape and ring configuration and improved cooling system reduce oil consumption. Continuous operating time has been extended and operating costs reduced through improved durability.

3. Compact, lightweight
The cylinder head is the integrally-cost type, and the crankshaft is the housing type. Minimum weight has been pursued for each engine part, and a reduction reversing gear employing a special new mechanism has been incorporated to obtain revolutionary engine lightness.

4. Long term continuous operation
Improved durability has been achieved by adopting special construction and materials for main moving parts and the valve mechanism, which are the areas most subject to trouble in high-speed engines. Moreover, a bypass system with a thermostat maintains the cooling water at a stable high temperature, resulting in reduced cylinder liner and piston ring wear, reduced thermal load around the combustion chamber, and substantially improved durability. Long-term continuous operation is possible by correct operation and proper attention to fuel and lubricating oil.

5. Low vibration
Vibration has been reduced by minimizing the weights of the pistons, connecting rods, and other sources of vibration, stringent weight management at assembly, and balancing of the flywheel, V-pulley, etc. Vibration has also been suppressed through the adoption of a special cylinder block rib construction and improved rigidity. Rubber shock mounts are available when the engine is to be used under conditions which may lead to severe vibration.

6. Quiet operation
Intake and exhaust noises have been lowered by adopting an intake silencer, water-cooled exhaust manifold and water mixing elbow type exhaust system.
The precombustion chamber system and semi-throttle type injection valve suppress combustion noise substantially.
Moreover, gear noise has been reduced by the use of helical gears around the gear train and clutch gear, and by the buffering effect of a damper disc.
In addition, noise prevention measures have also been taken at the control valve mechanism and other parts.

7. Superior matching to the hull
(1) Four-point support engine installation feet make installation easy.
(2) Mist intake system prevents contamination of the engine room.
(3) Since the fuel pump is mounted on the engine, the fuel tank can be installed anywhere.
(4) Water-cooled manifold prevents a rise in the engine room temperature.
(5) Independent type instrument panel can be installed wherever it is easiest to see.
(6) Speed, clutch forward and reverse, decompression and engine stop can all be remotely controlled.
(7) The use of rubber and vinyl hoses for ship interior piping not only facilitates piping work, but also eliminates brazing faults caused by vibration.
(8) Tandem type cooling water/bilge pump is available as an option.

8. Easy to operate
(1) Cooling water temperature switch and lubricating oil pressure switch are provided, and alarm lamps and buzzer are mounted on the instrument panel.
(2) Threaded hole in the V-pulley permits front power take-off.
(3) Manual starting handle permits manual starting.
(4) Positive clutch engagement and disengagement; propeller shaft does not rotate when clutch is placed in neutral position.

6. Engine Cross-Section

6-1 2QM20

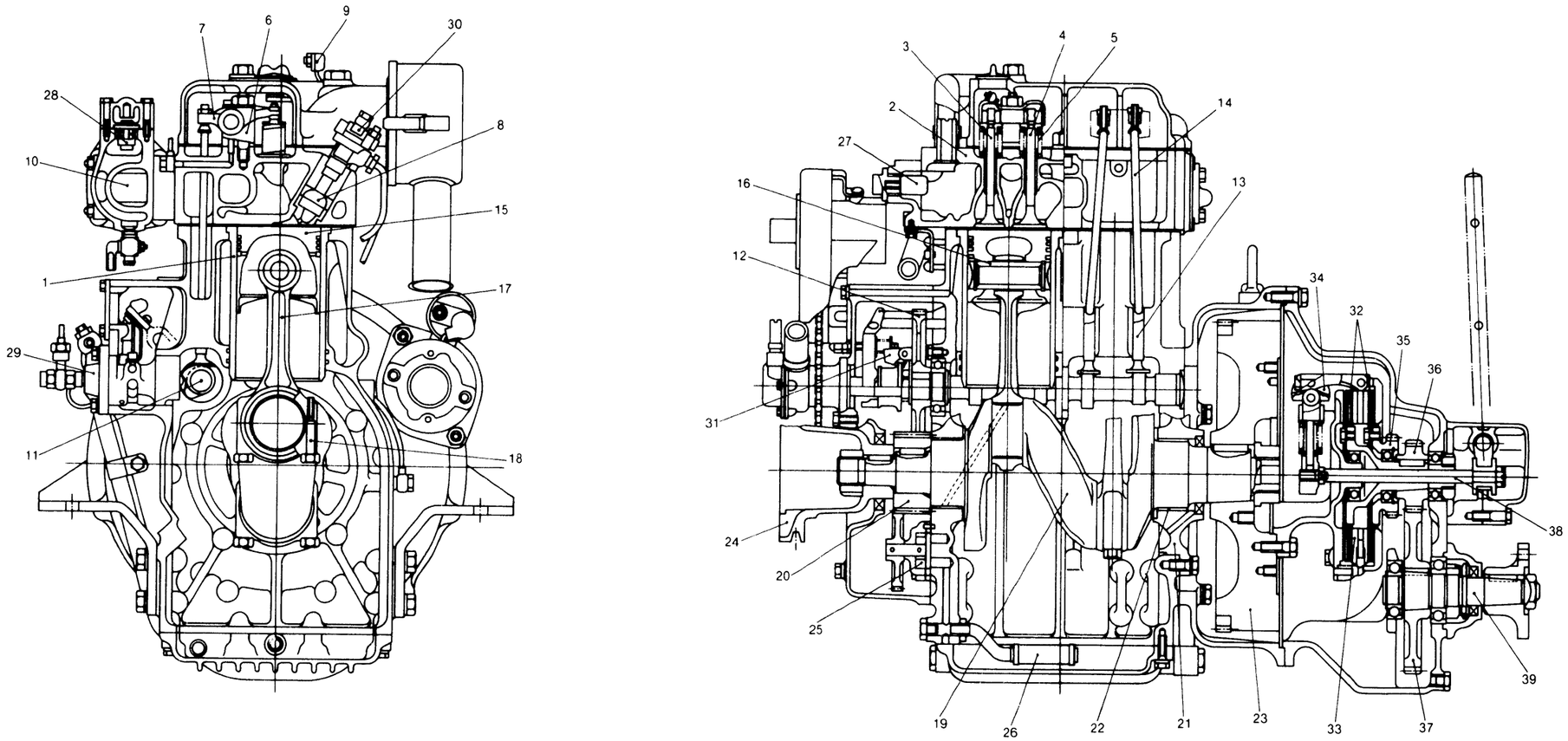

1. Cylinder liner
2. Cylinder head
3. Exhaust valve
4. Intake valve
5. Valve spring
6. Valve rocker arm support
7. Valve rocker arm
8. Precombustion chamber
9. Decompression lever
10. Exhaust manifold
11. Camshaft
12. Camshaft gear
13. Tappet
14. Push rod
15. Piston
16. Piston pin
17. Connecting rod
18. Connecting rod bolt
19. Crankshaft
20. Crankshaft gear
21. Main bearing housing
22. Main bearing
23. Flywheel
24. Crankshaft V-pulley
25. Lubricating oil pump
26. Lubricating oil inlet pipe
27. Anticorrosion zinc
28. Thermostat
29. Fuel injection pump
30. Fuel injection valve
31. Governor weight
32. Friction disc
33. Steel disc plate
34. V-lever
35. Reversing shaft gear
36. Forward small gear
37. Forward large gear
38. Shifting shaft
39. Output shaft

F027A2223

6-2 2QM20F

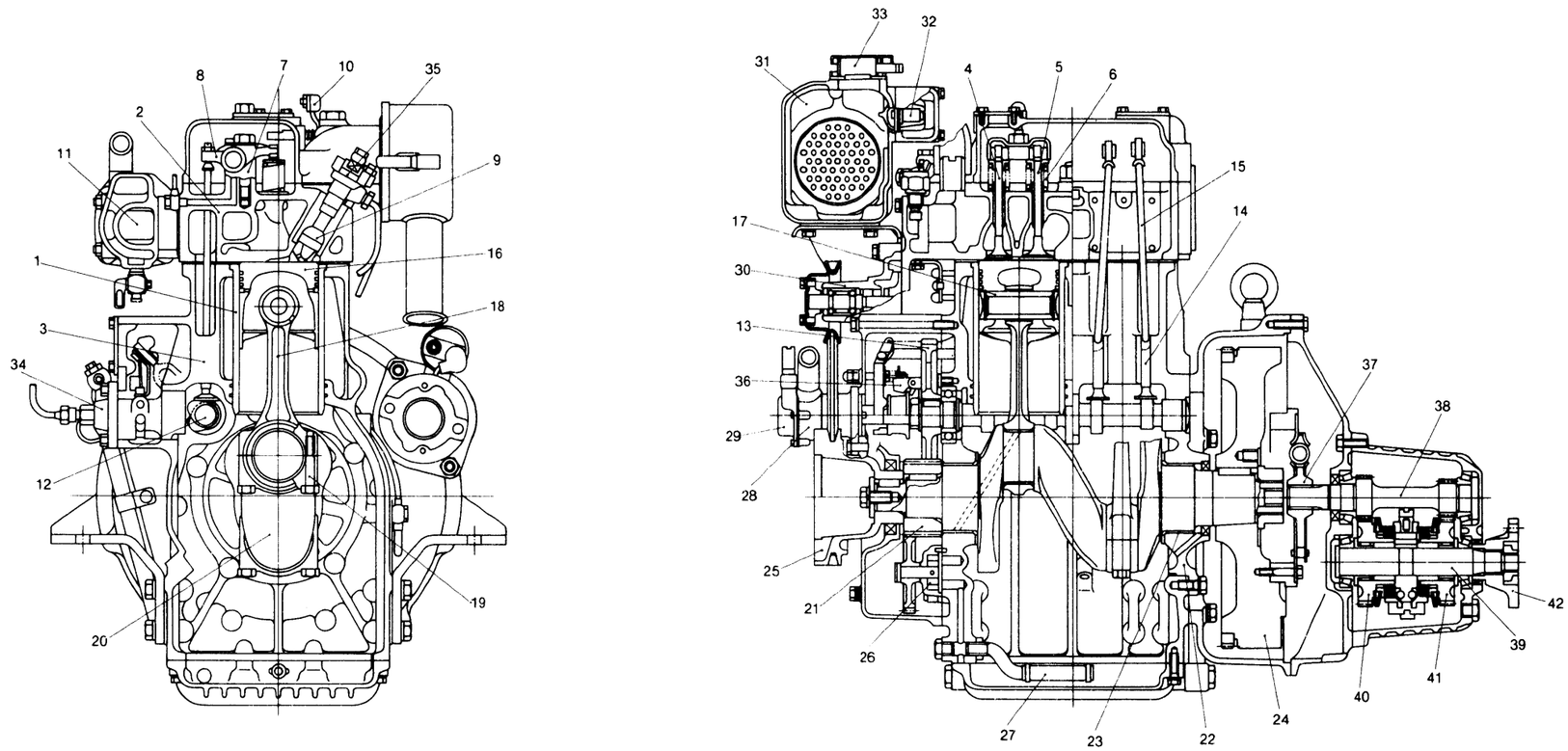

1. Cylinder liner
2. Cylinder head
3. Cylinder block
4. Exhaust valve
5. Intake valve
6. Valve spring
7. Valve rocker arm support
8. Valve rocker arm
9. Precombustion chamber
10. Decompression lever
11. Exhaust manifold
12. Camshaft
13. Camshaft gear
14. Tappet
15. Push rod
16. Piston
17. Piston pin
18. Connecting rod
19. Connecting rod bolt
20. Crankshaft
21. Crankshaft gear
22. Main bearing housing
23. Main bearing
24. Flywheel
25. Crankshaft V-pulley
26. Lubricating oil pump
27. Lubricating oil inlet pipe
28. Cooling water pump (sea water)
29. Bilge pump (option)
30. Cooling water pump (fresh water)
31. Heat exchanger
32. Thermostat
33. Filler cap (with pressure valve)
34. Fuel injection pump
35. Fuel injection valve
36. Governor weight
37. Damper disc
38. Input shaft
39. Output shaft
40. Forward large gear
41. Reverse large gear
42. Output shaft coupling

6-3 3QM30

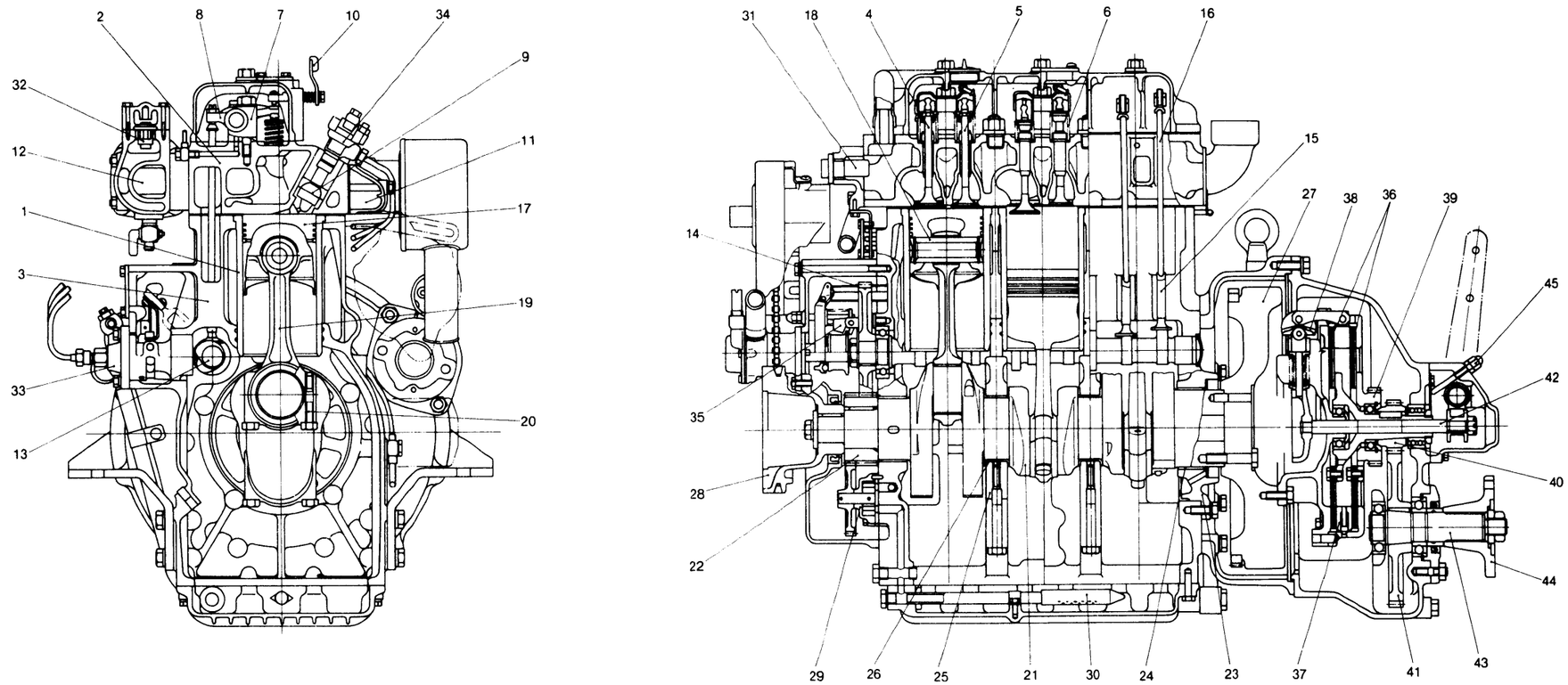

1. Cylinder liner
2. Cylinder head
3. Cylinder block
4. Intake valve
5. Exhaust valve
6. Valve spring
7. Valve rocker arm support
8. Valve rocker arm
9. Precombustion chamber
10. Decompression lever
11. Intake manifold
12. Exhaust manifold
13. Camshaft
14. Camshaft gear
15. Tappet
16. Push rod
17. Piston
18. Piston pin
19. Connecting rod
20. Connecting rod bolt
21. Crankshaft
22. Crankshaft gear
23. Main bearing housing
24. Main bearing
25. Intermediate main bearing housing
26. Intermediate main bearing
27. Flywheel
28. Crankshaft V-pulley
29. Lubricating oil pump
30. Lubricating oil inlet pipe
31. Anticorrosion zinc
32. Thermostat
33. Fuel injection pump
34. Fuel injection valve
35. Governor weight
36. Friction disc
37. Steel disc plate
38. V-lever
39. Reversing shaft gear
40. Forward small gear
41. Forward large gear
42. Shifting shaft
43. Output shaft
44. Output shaft coupling
45. Neutral point set claw

F027A2223

6-4 3QM30F

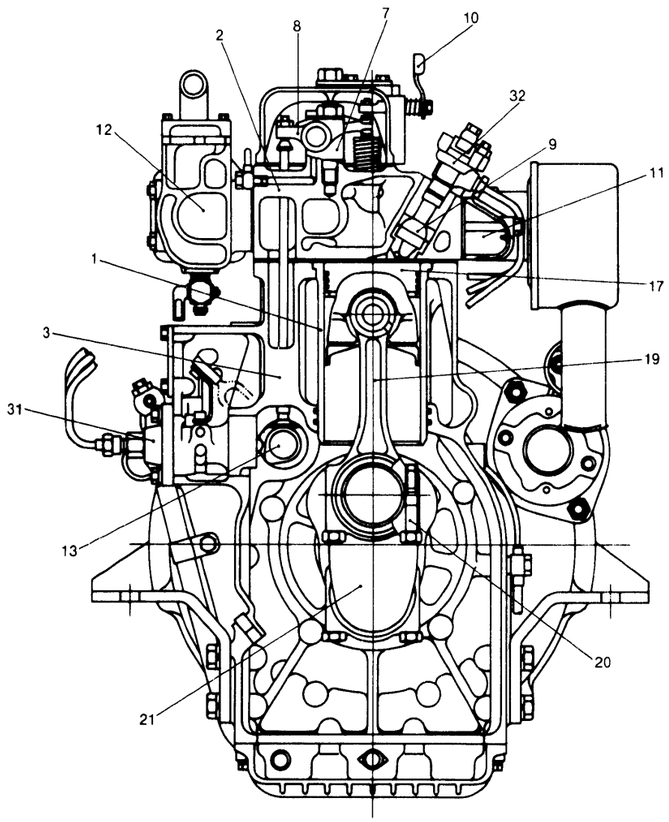

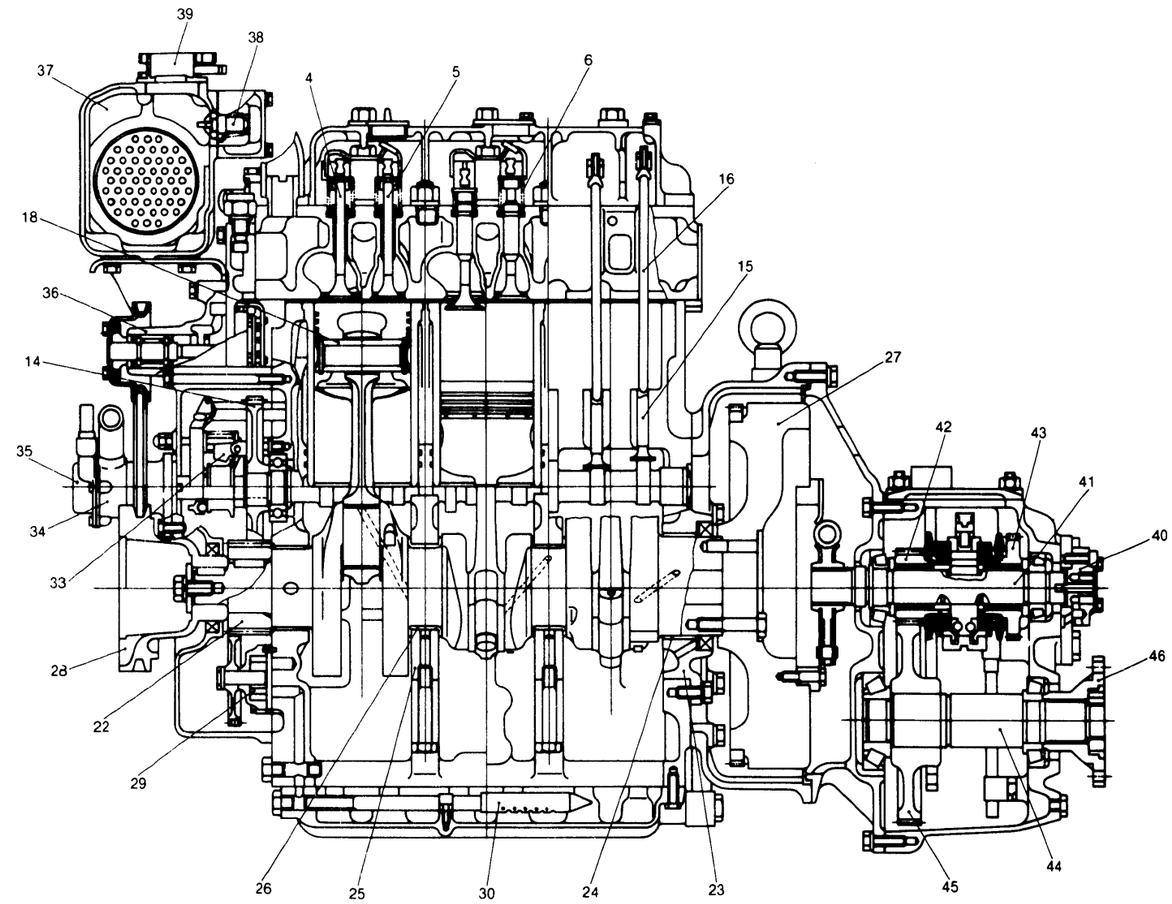

1. Cylinder liner
2. Cylinder head
3. Cylinder block
4. Intake valve
5. Exhaust valve
6. Valve spring
7. Valve rocker arm support
8. Valve rocker arm
9. Precombustion chamber
10. Decompression lever
11. Intake manifold
12. Exhaust manifold
13. Camshaft
14. Camshaft gear
15. Tappet
16. Push rod
17. Piston
18. Piston pin
19. Connecting rod
20. Connecting rod bolt
21. Crankshaft
22. Crankshaft gear
23. Main bearing housing
24. Main bearing
25. Intermediate main bearing housing
26. Intermediate main bearing
27. Flywheel
28. Crankshaft V-pulley
29. Lubricating oil pump
30. Lubricating oil inlet pipe
31. Fuel injection pump
32. Fuel injection valve
33. Governor weight
34. Cooling water pump (sea water)
35. Bilge pump (option)
36. Cooling water pump (fresh water)
37. Heat exchanger
38. Thermostat
39. Filler cap (with pressure relief valve)
40. Lubricating oil pump (clutch)
41. Input shaft
42. Forward small gear
43. Reverse small gear
44. Output shaft
45. Output shaft large gear
46. Output shaft coupling

7. Dimensions

7-1 2QM20

mm (in.)

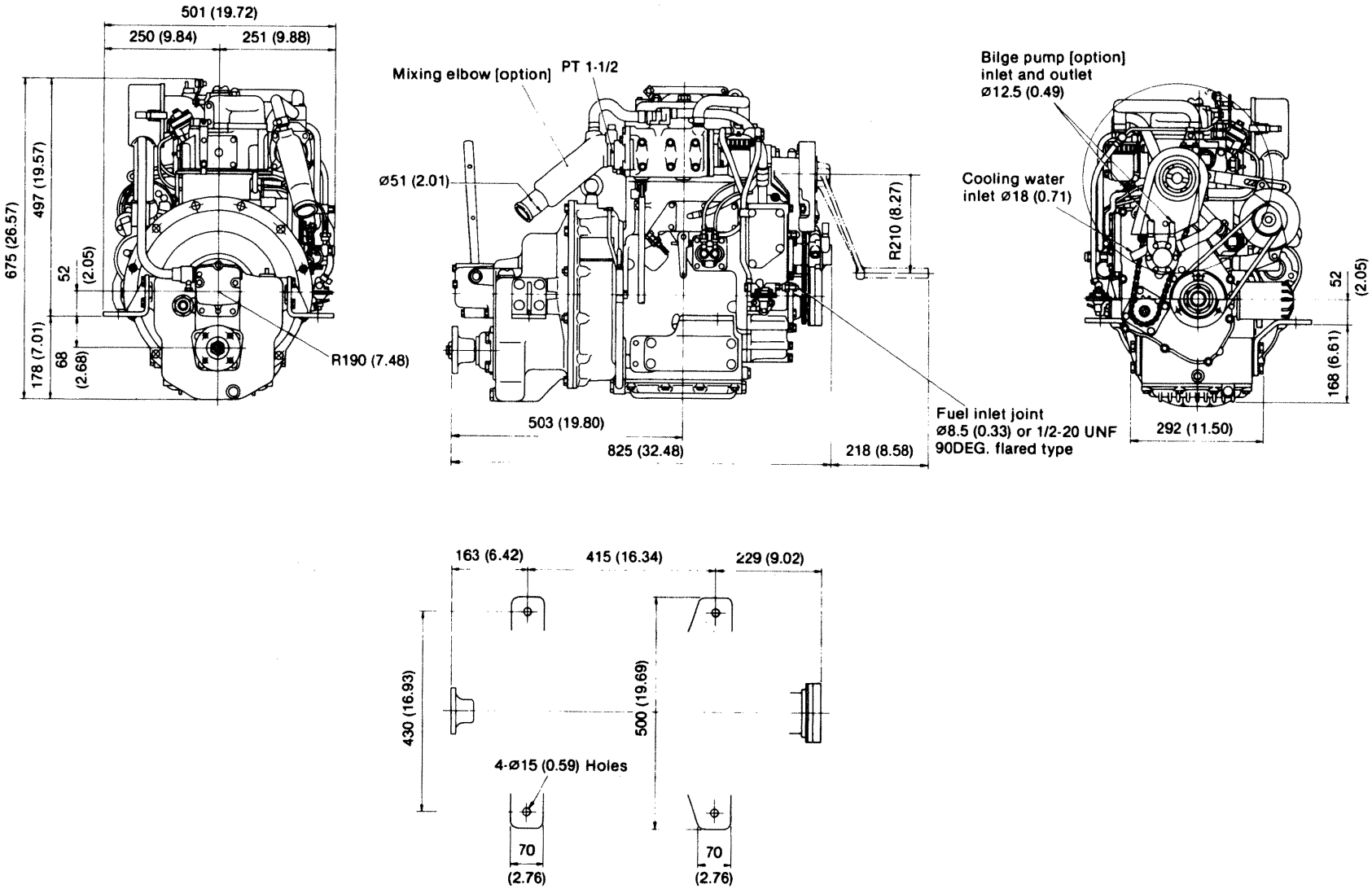

7-2 2QM20B

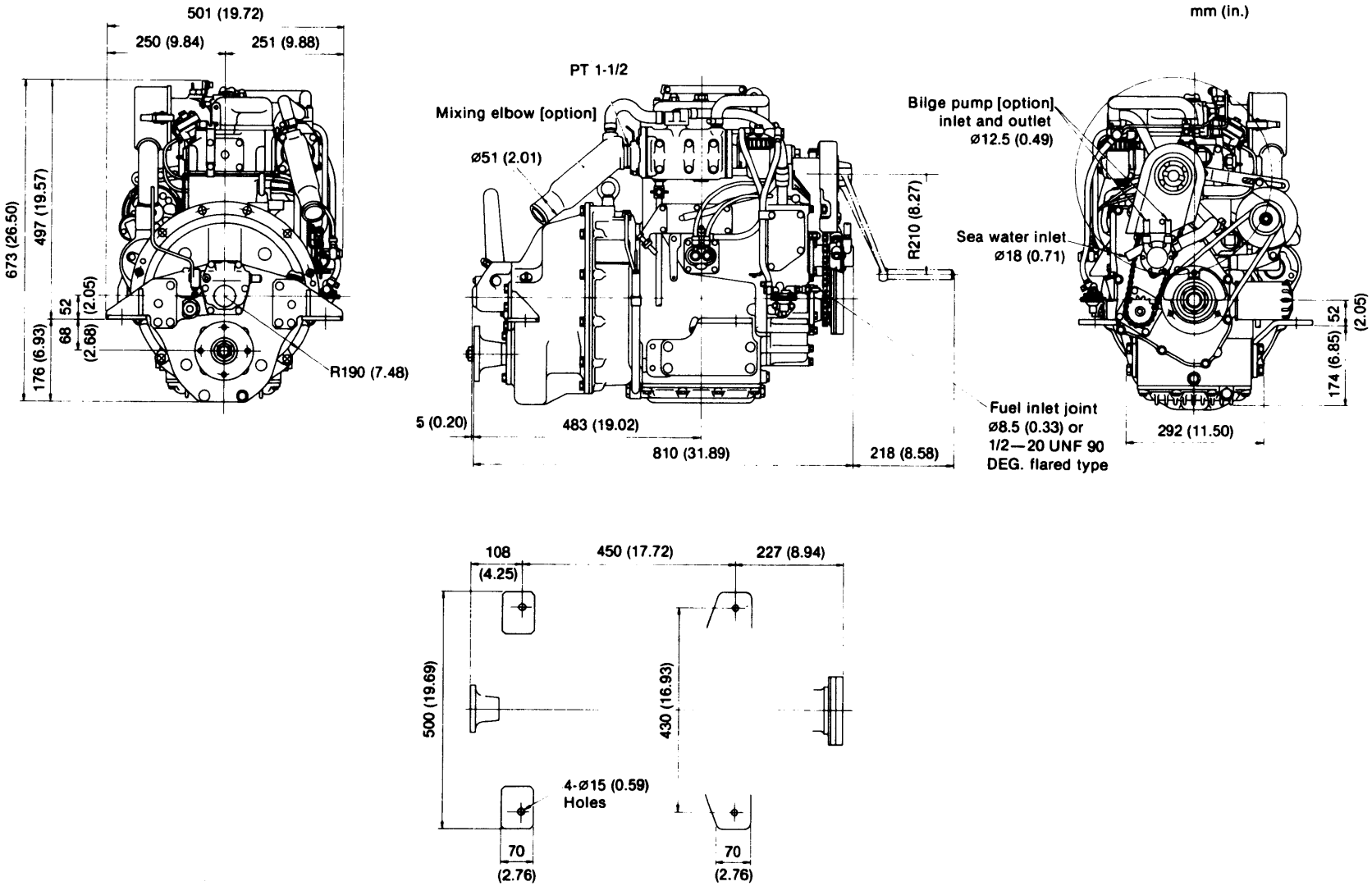
mm (in.)
501 (19.72)
250 (9.84)
251 (9.88)
673 (26.50)
497 (19.57)
52
(2.05)
68
(2.68)
176 (6.93)
R190 (7.48)
PT 1-1/2
Mixing elbow [option]
ø51 (2.01)
R210 (8.27)
5 (0.20)
483 (19.02)
810 (31.89)
218 (8.58)
Bilge pump [option]
inlet and outlet
ø12.5 (0.49)
Sea water inlet
ø18 (0.71)
Fuel inlet joint
ø8.5 (0.33) or
1/2—20 UNF 90
DEG. flared type
292 (11.50)
174 (6.85)
52
(2.05)
108
(4.25)
450 (17.72)
227 (8.94)
500 (19.69)
430 (16.93)
4-ø15 (0.59)
Holes
70
(2.76)
70
(2.76)

7-3 2QM20H

mm (in.)

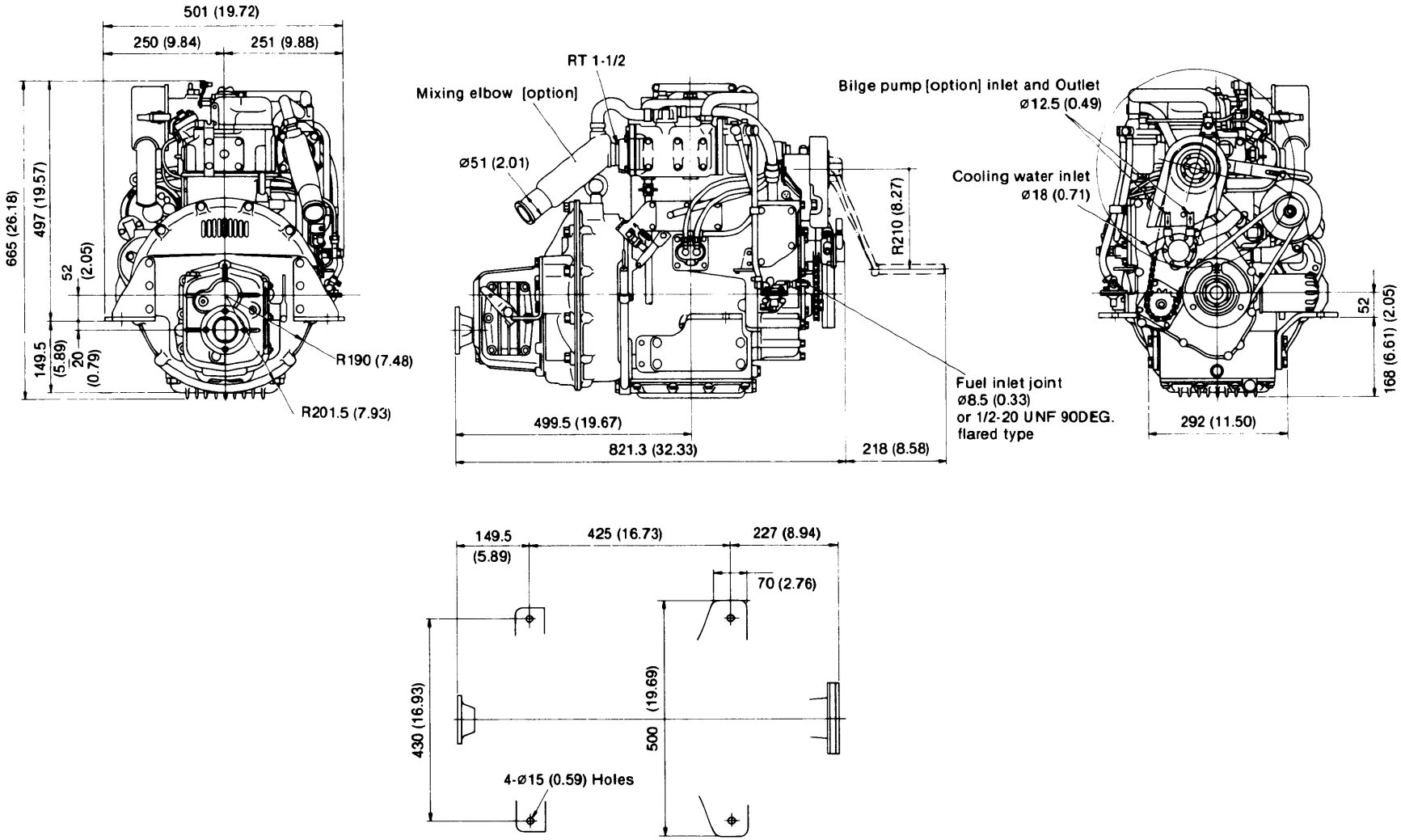

7-4 2QM20Y

mm (in.)

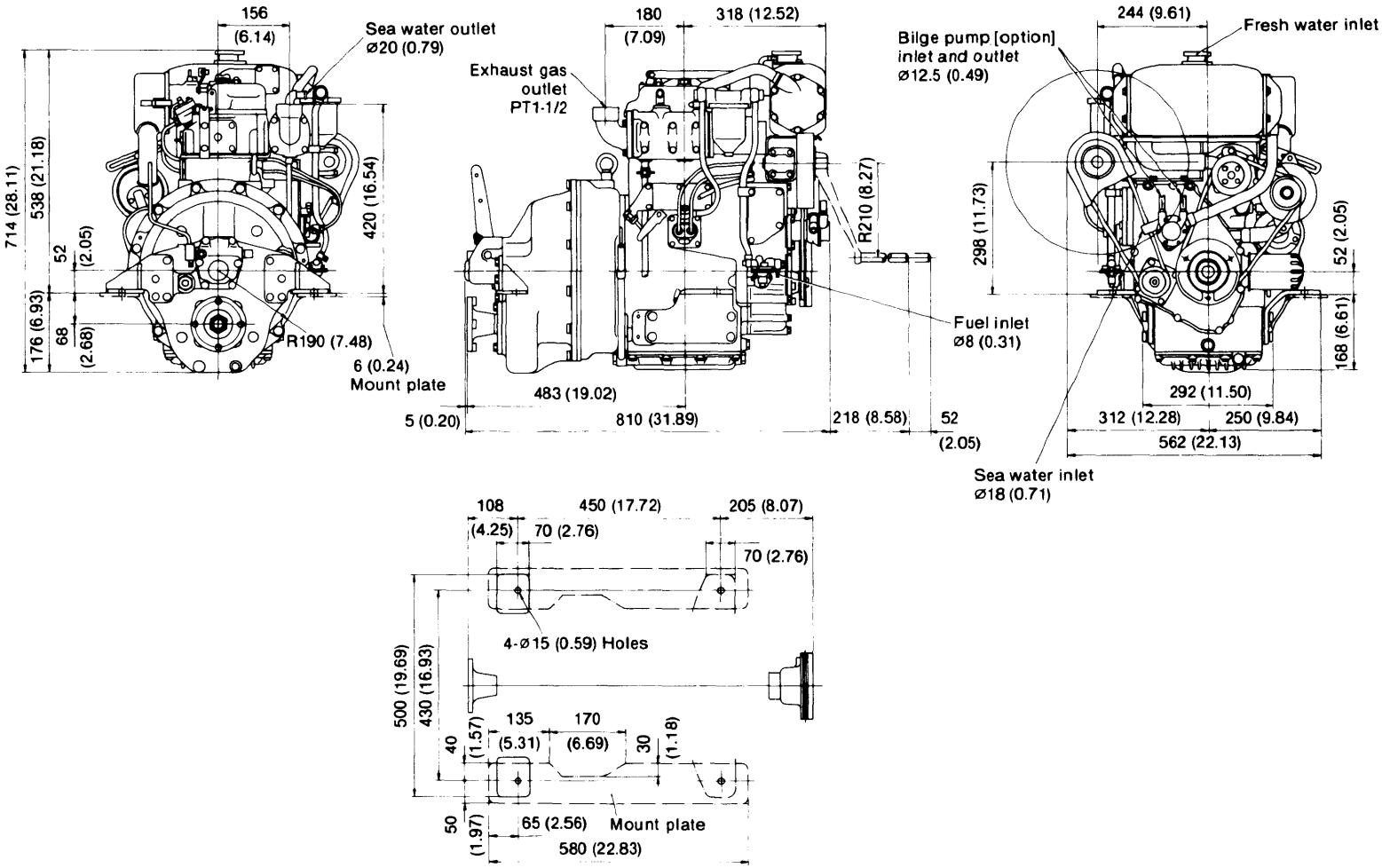

7-5 2QM20F

mm (in.)

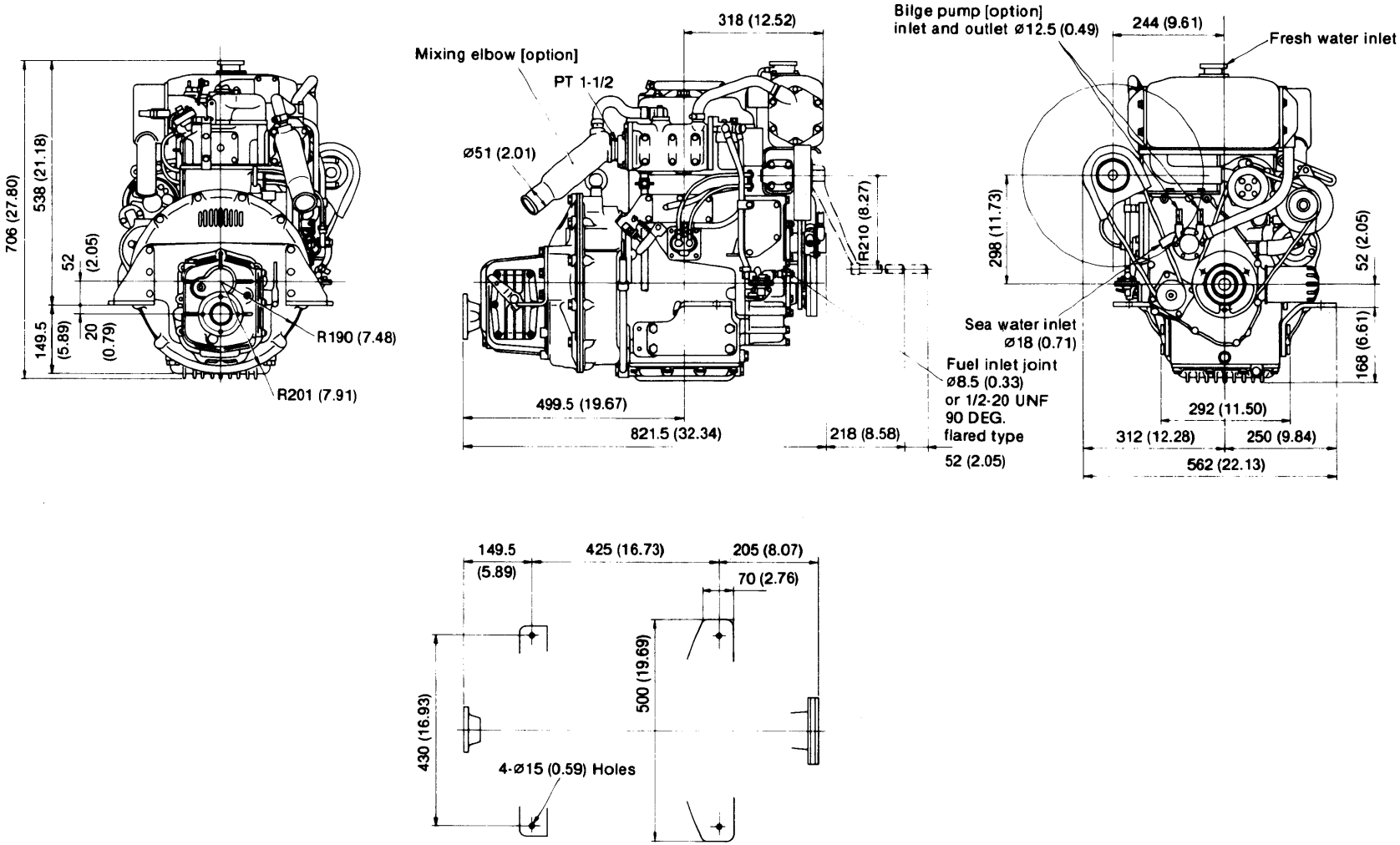

7-6 3QM30

mm (in.)

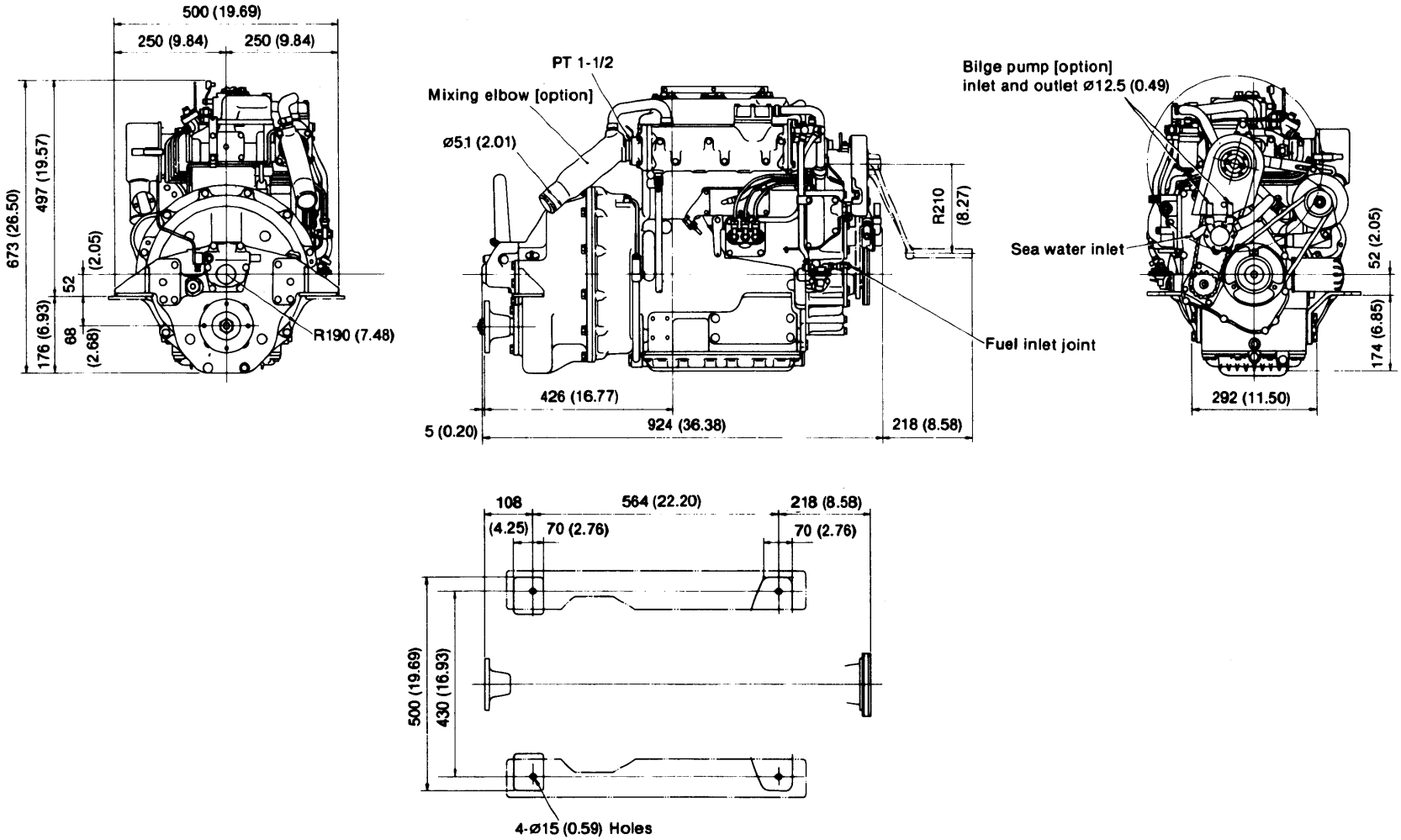

7-7 3QM30H

mm (in.)

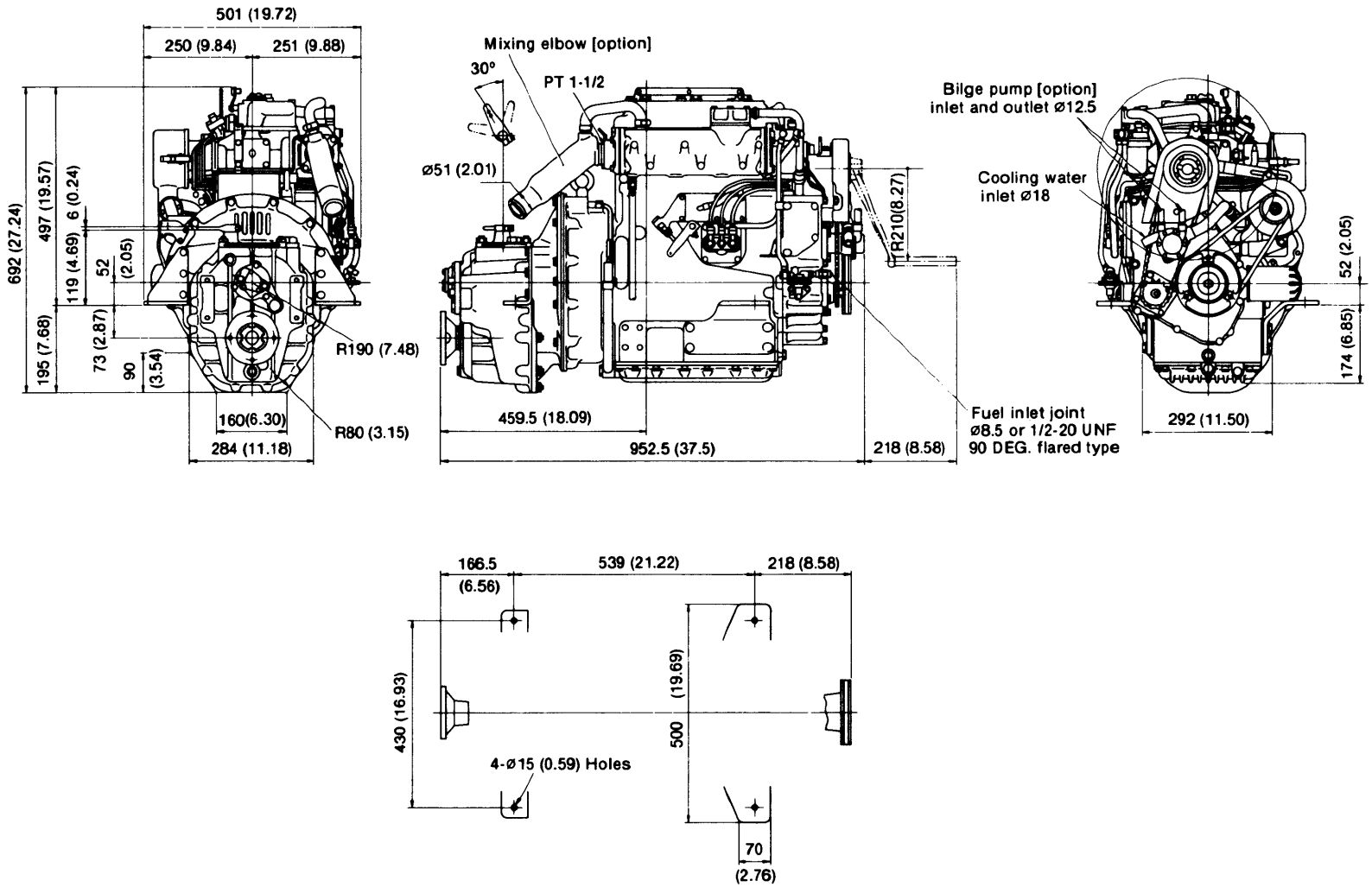

7-8 3QM30Y

mm (in.)

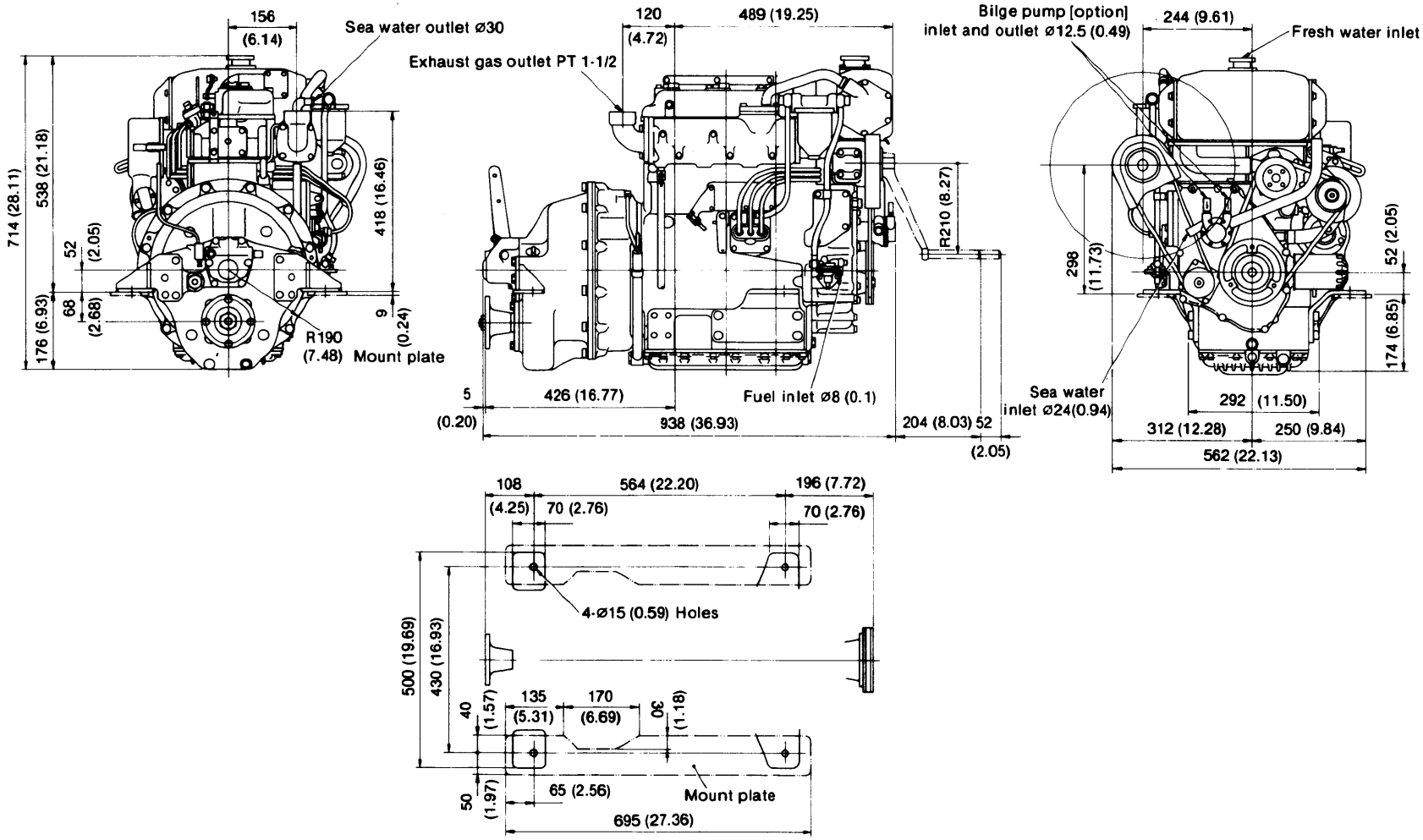

7-9 3QM30F

mm (in.)

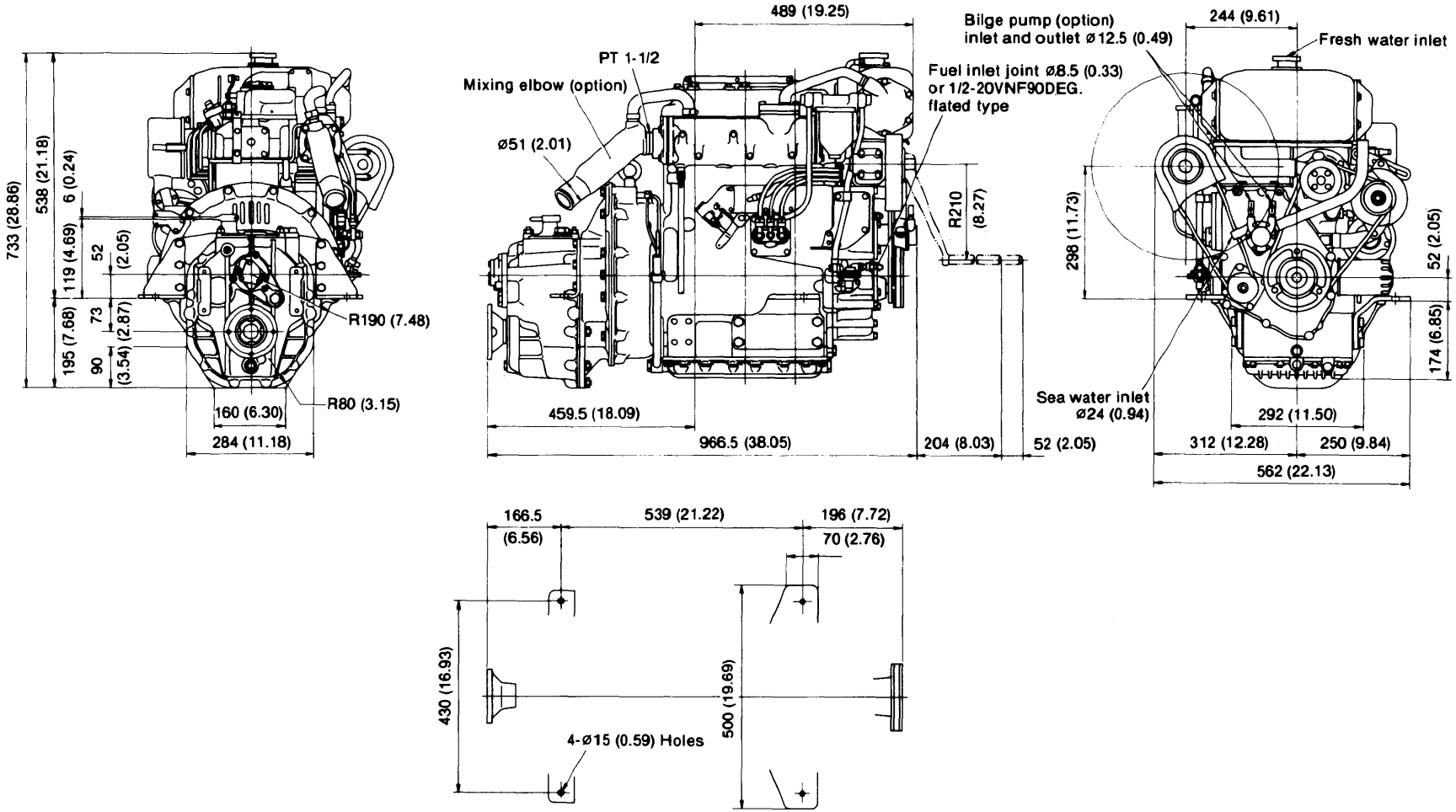

8. System Diagrams

8-1 Cooling system

8-1.1 Sea water cooling

(1) 2QM20(H)

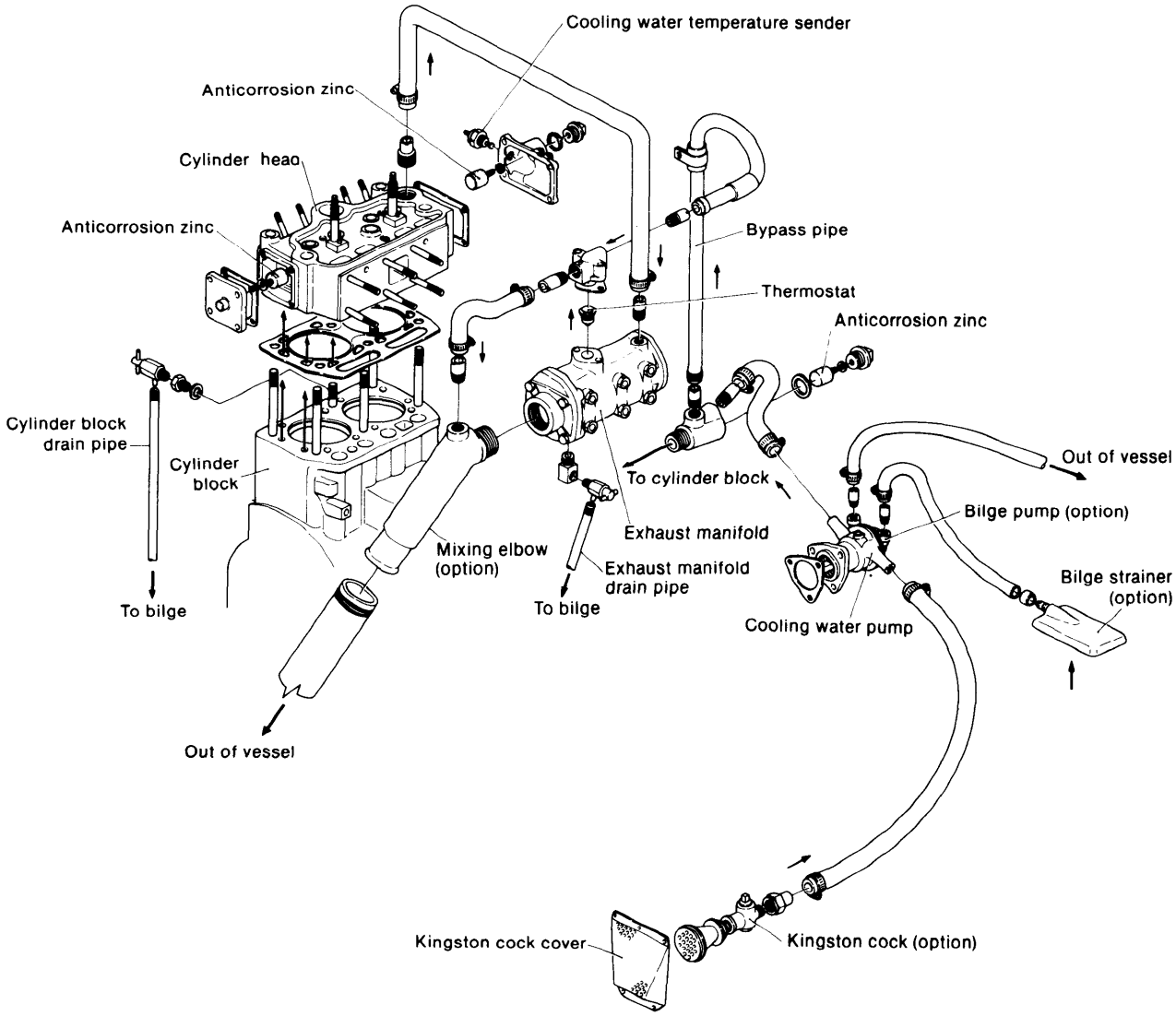

(2) 3QM30(H)

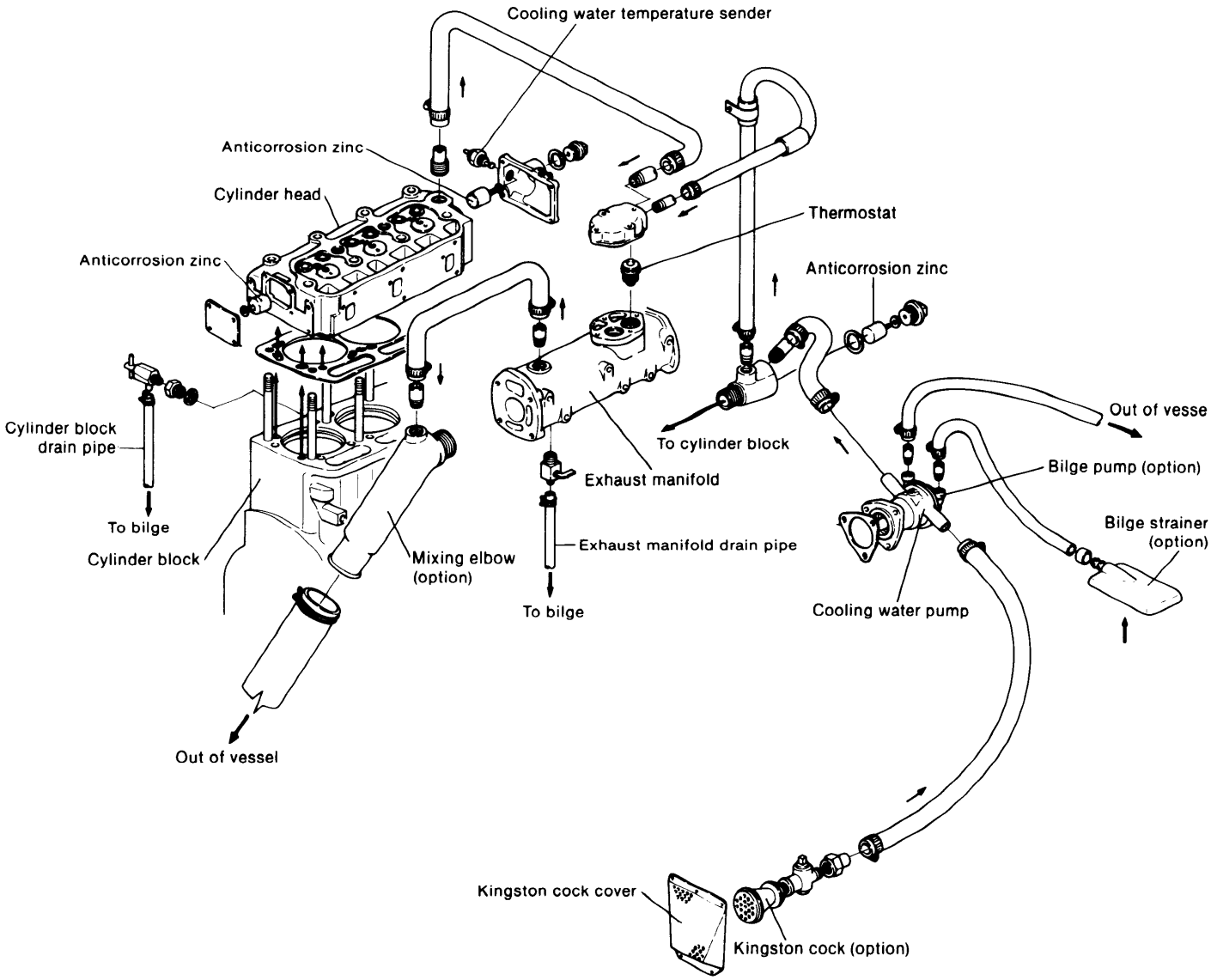
Cooling water temperature sender
Anticorrosion zinc
Cylinder head
Anticorrosion zinc
Thermostat
Anticorrosion zinc
Cylinder block
drain pipe
To bilge
Cylinder block
Mixing elbow
(option)
Out of vessel
To cylinder block
Exhaust manifold
Exhaust manifold drain pipe
To bilge
Out of vesse
Bilge pump (option)
Bilge strainer
(option)
Cooling water pump
Kingston cock cover
Kingston cock (option)

8-1.2 Fresh water cooling

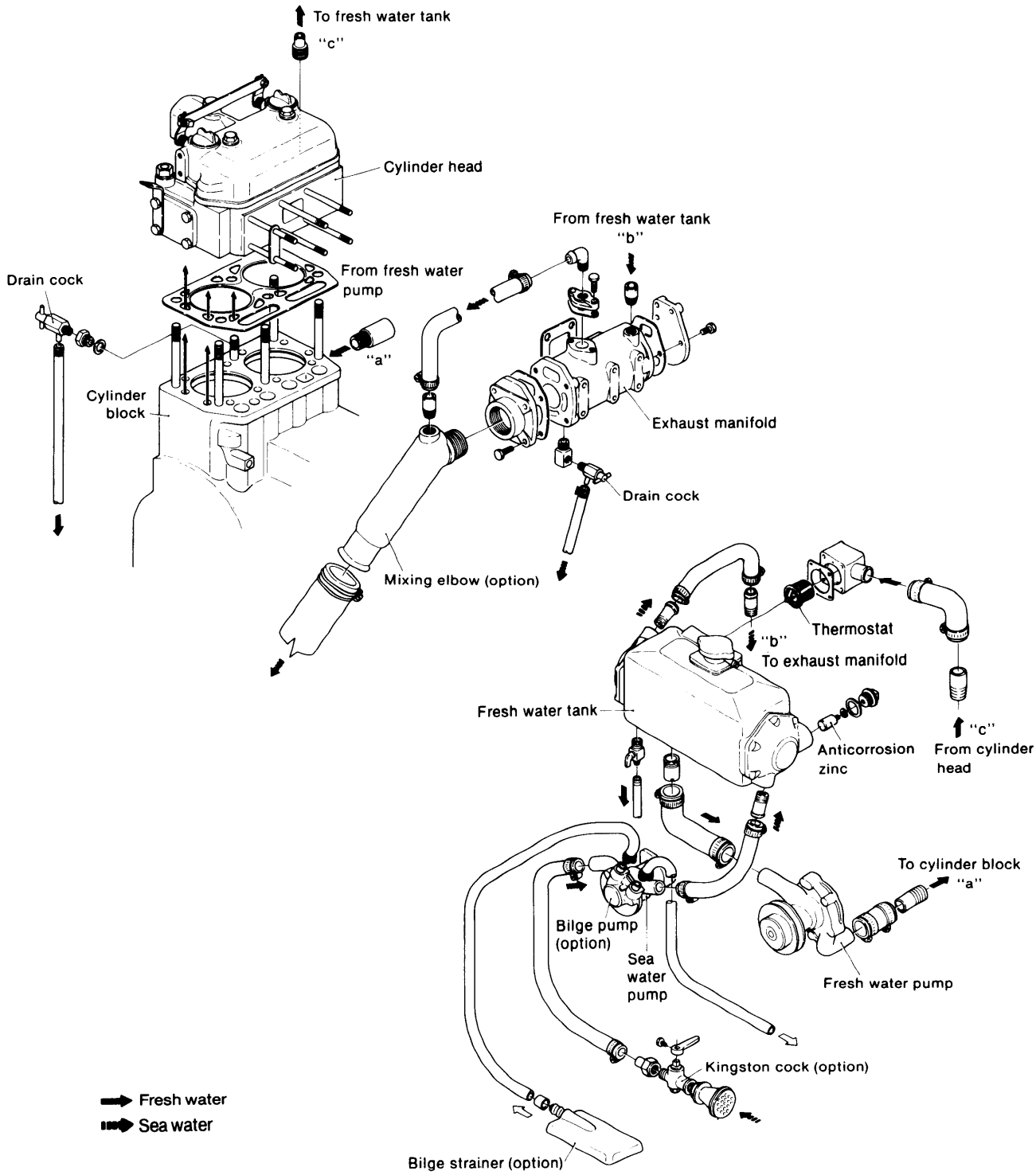

8-2 Lubrication system

8-2.1 2QM20(H)

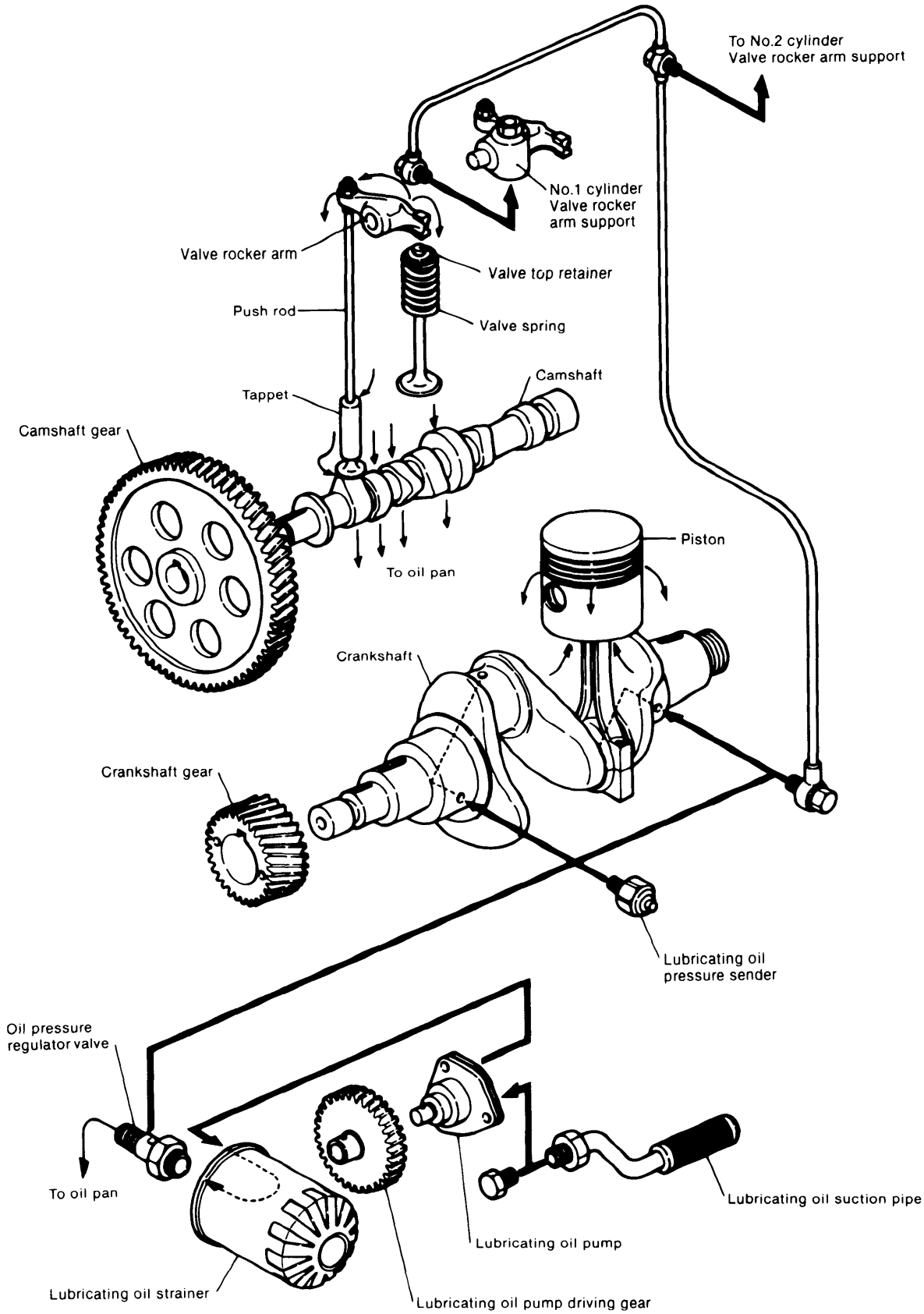

8-2.2 3QM30(H)

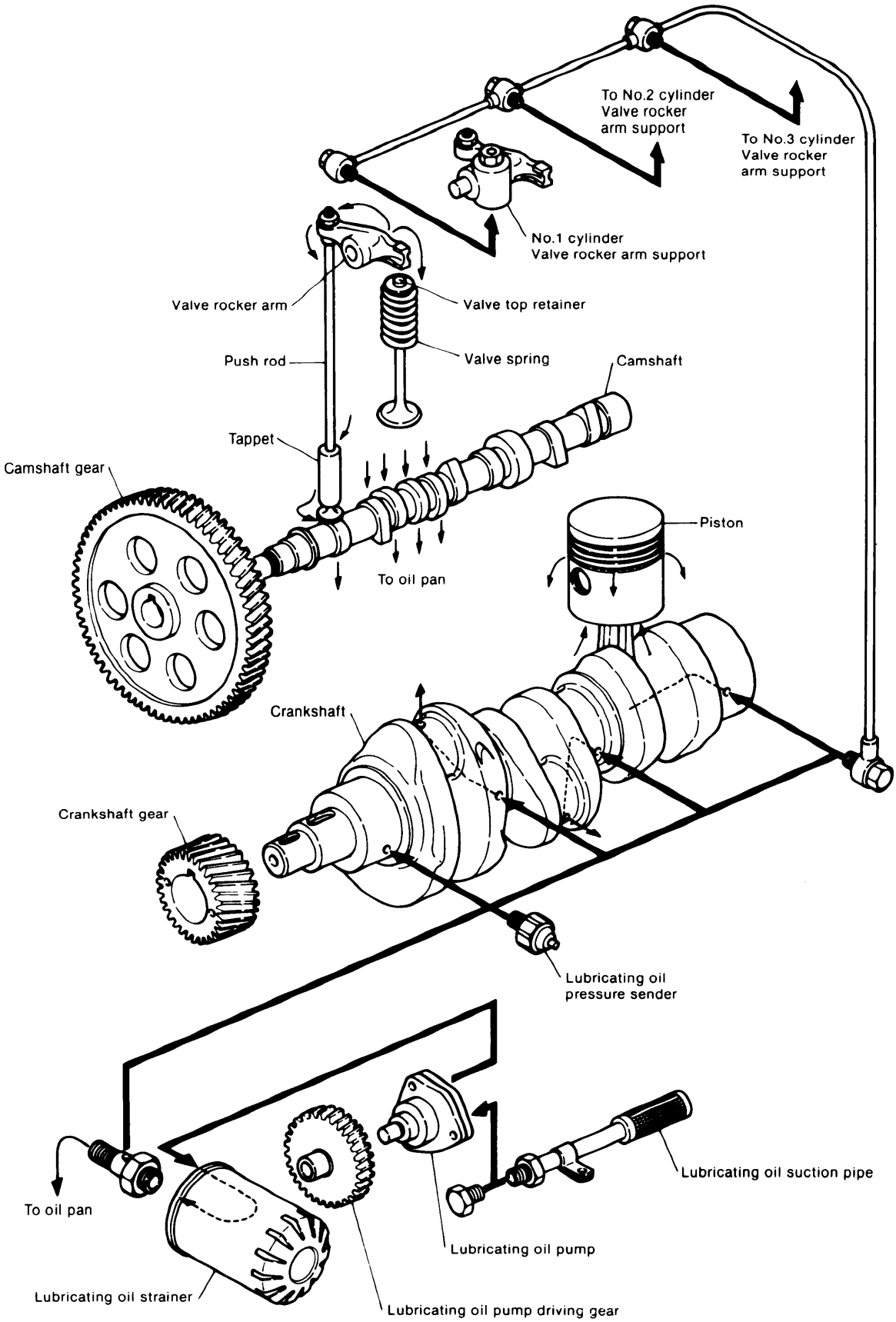
To No.2 cylinder
Valve rocker
arm support
To No.3 cylinder
Valve rocker
arm support
No.1 cylinder
Valve rocker arm support
Valve rocker arm
Valve top retainer
Push rod
Valve spring
Camshaft
Tappet
Camshaft gear
Piston
To oil pan
Crankshaft
Crankshaft gear
Lubricating oil
pressure sender
Lubricating oil suction pipe
To oil pan
Lubricating oil pump
Lubricating oil strainer
Lubricating oil pump driving gear

8-3 Fuel system

8-3.1 2QM20(H)

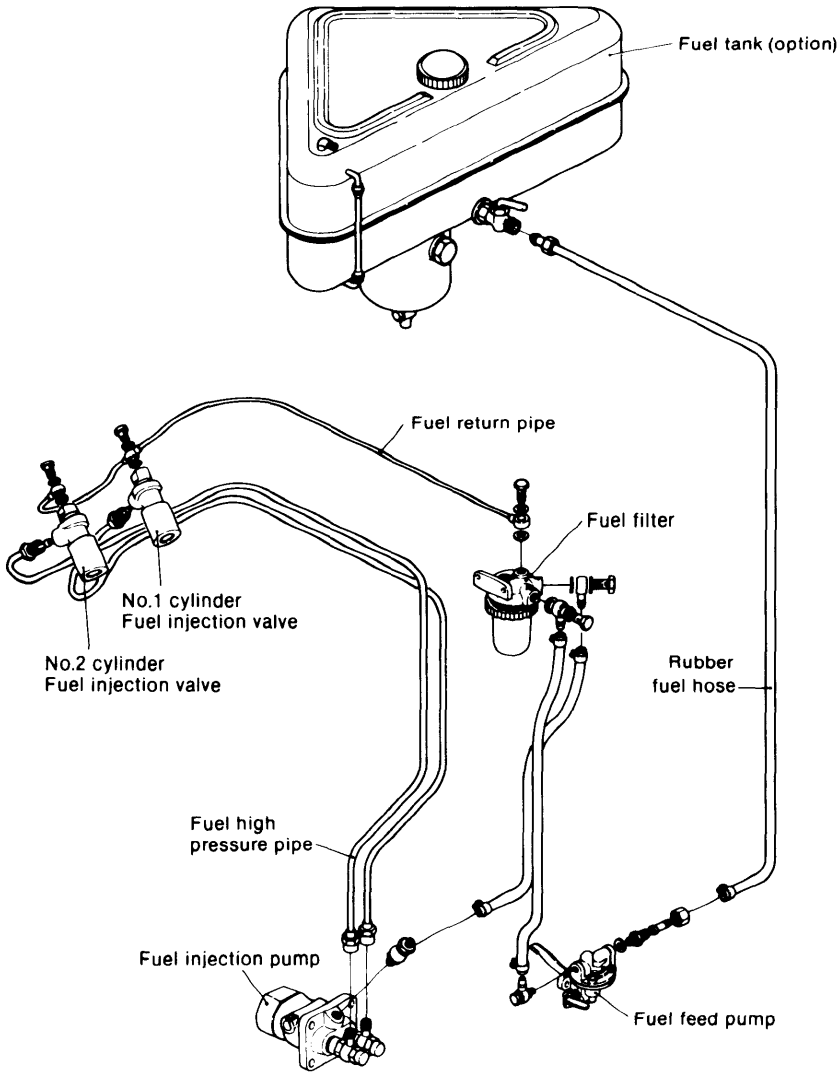

8-3.2 3QM30(H)

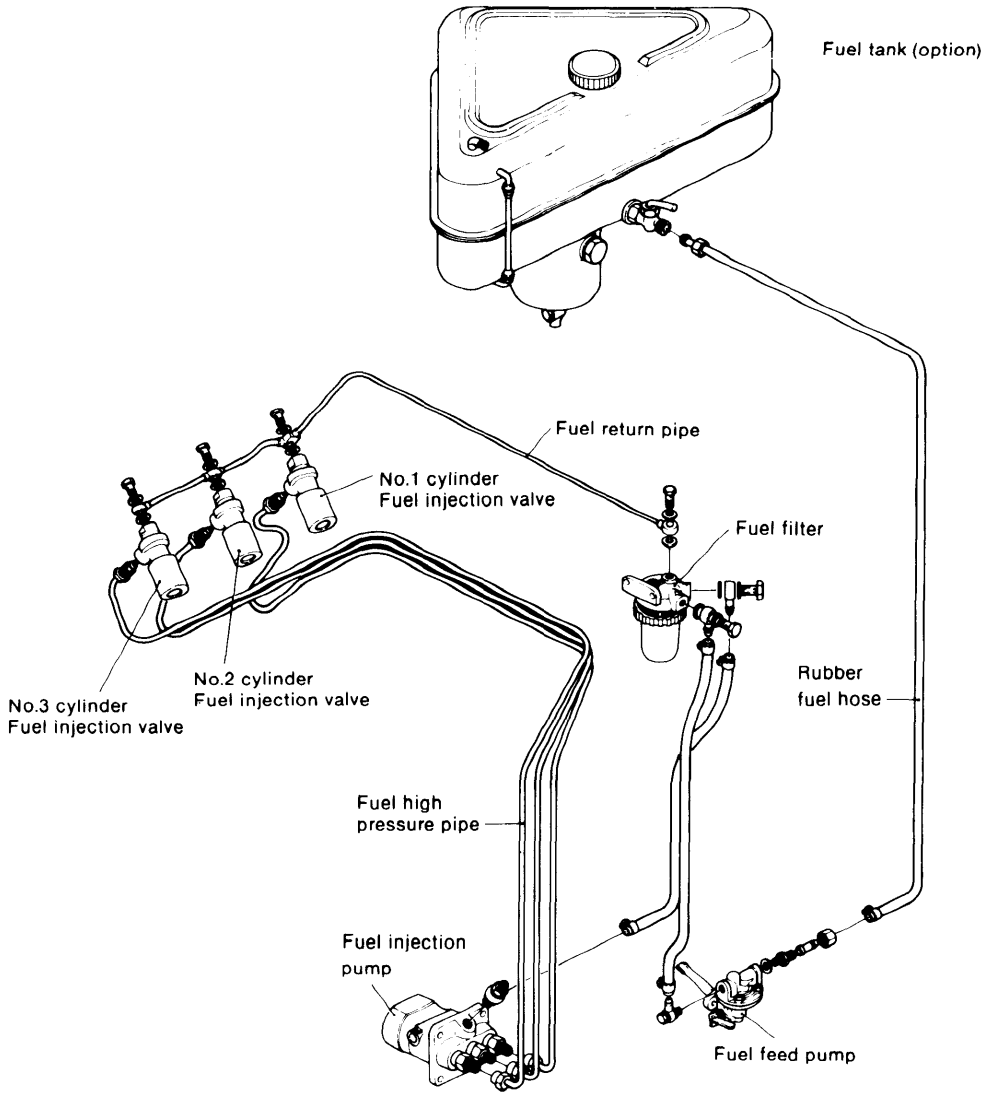
Fuel tank (option)
Fuel return pipe
No.1 cylinder
Fuel injection valve
Fuel filter
No.2 cylinder
Fuel injection valve
No.3 cylinder
Fuel injection valve
Rubber
fuel hose
Fuel high
pressure pipe
Fuel injection
pump
Fuel feed pump

8-4 Electrical system

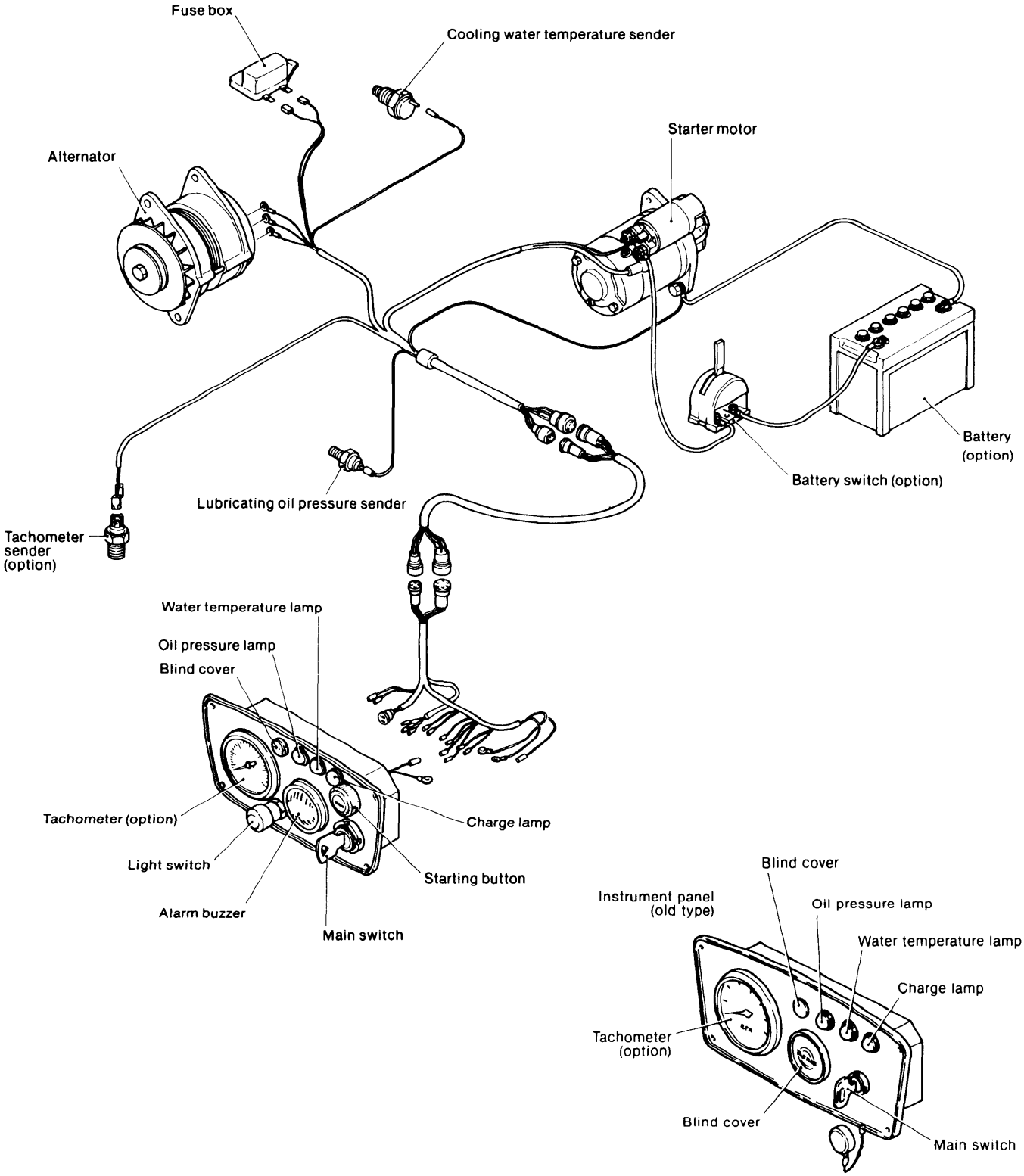

8-5 Timing gear train

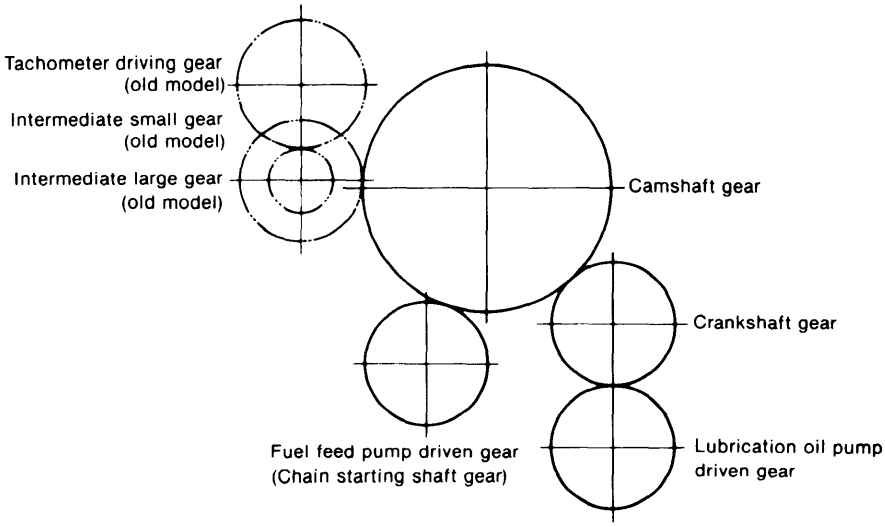

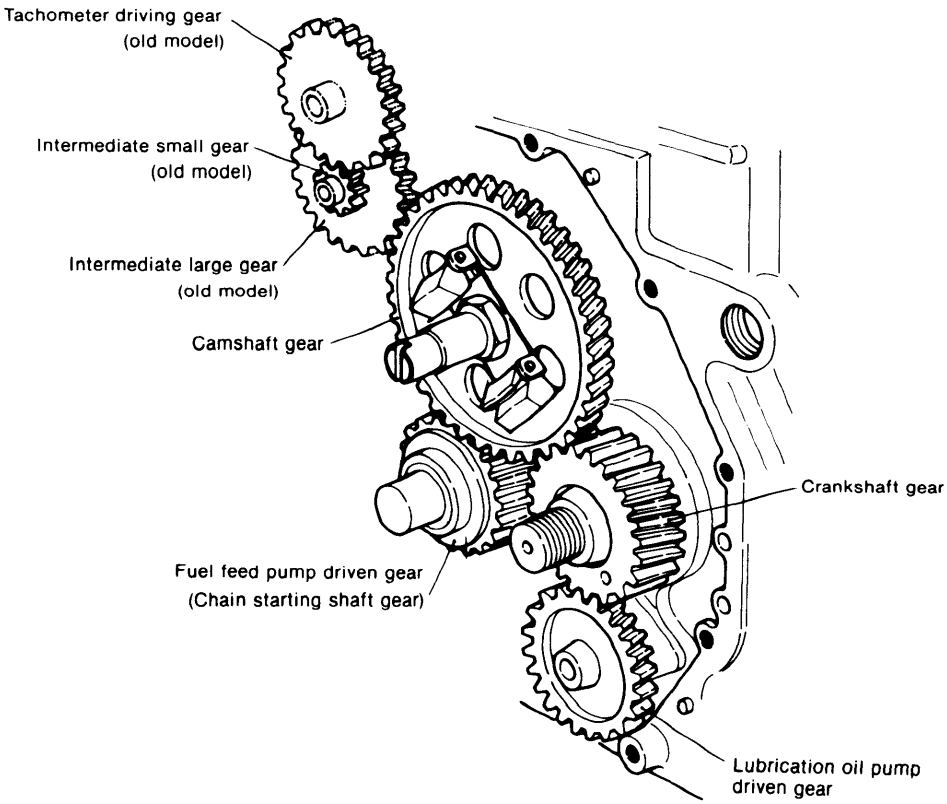

8-6 Reduction reversing power transmission system

8-6.1 2QM20 (Type of clutch YP-7M)
3QM30 (Type of clutch YP-10M)

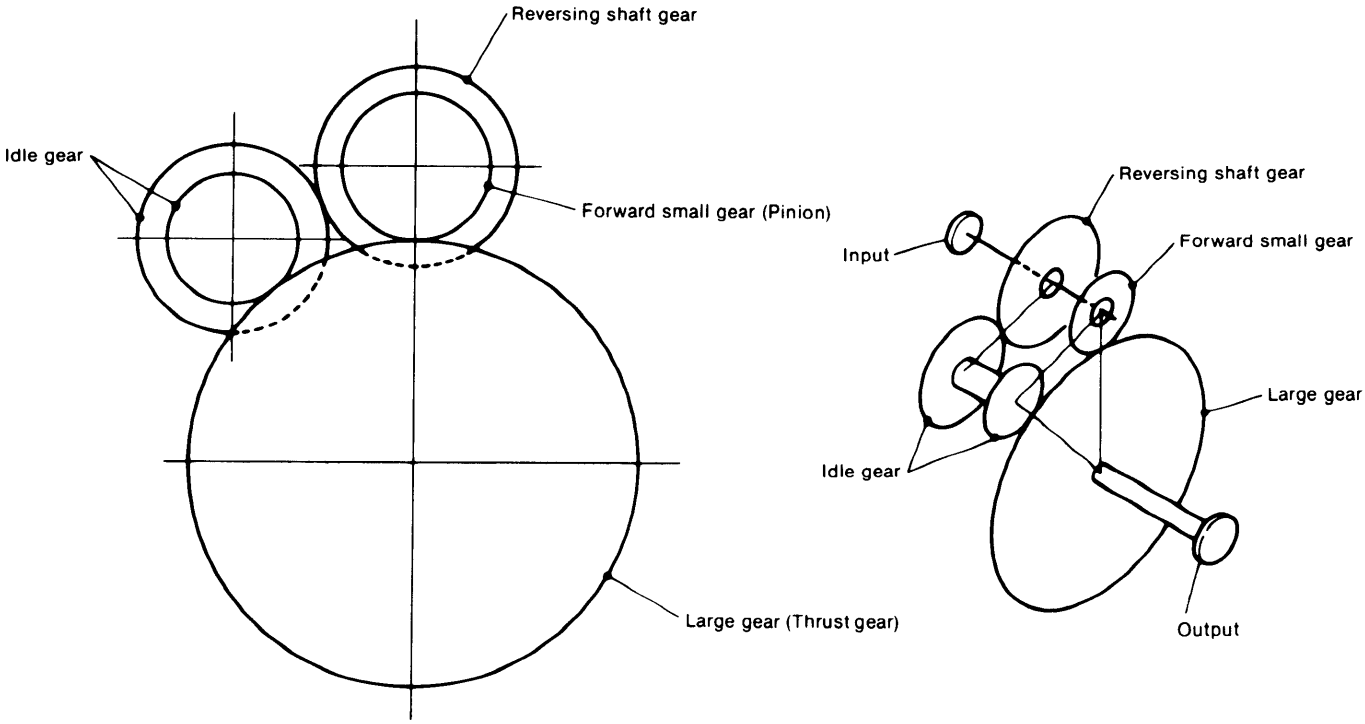

8-6.2 2QM20H (Type of clutch KBW10A)

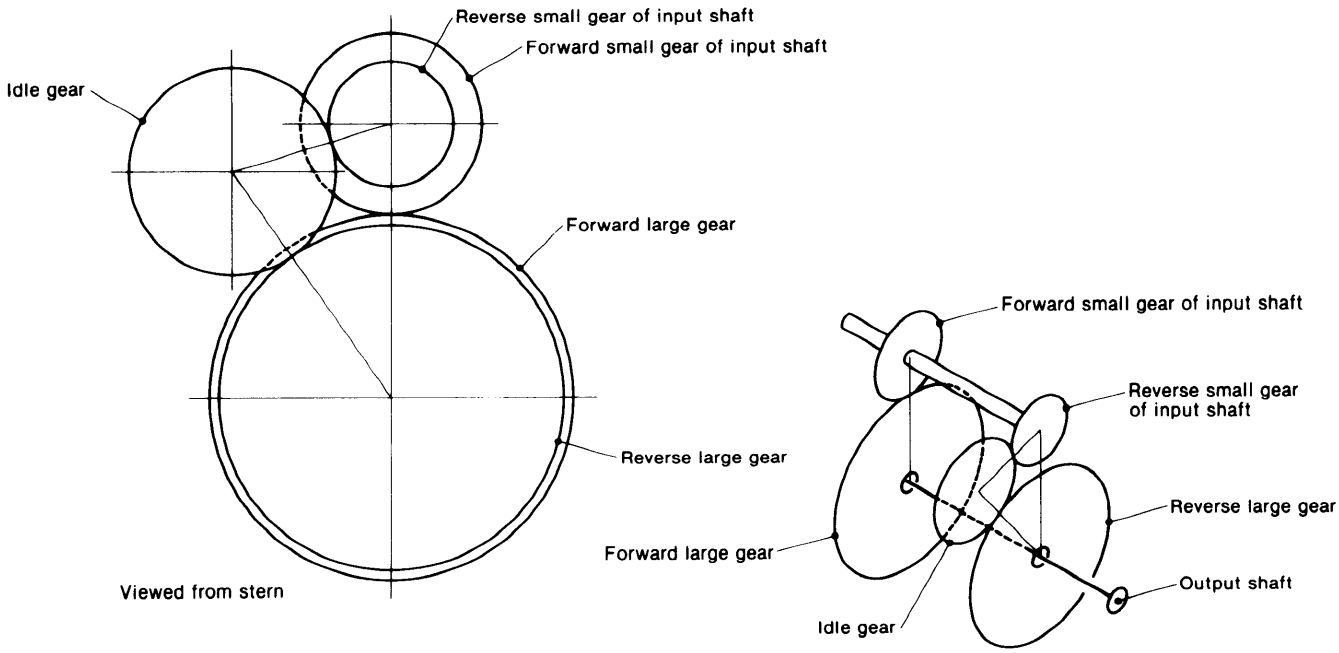

8-6.3 3QM30H (Type of clutch KH18)

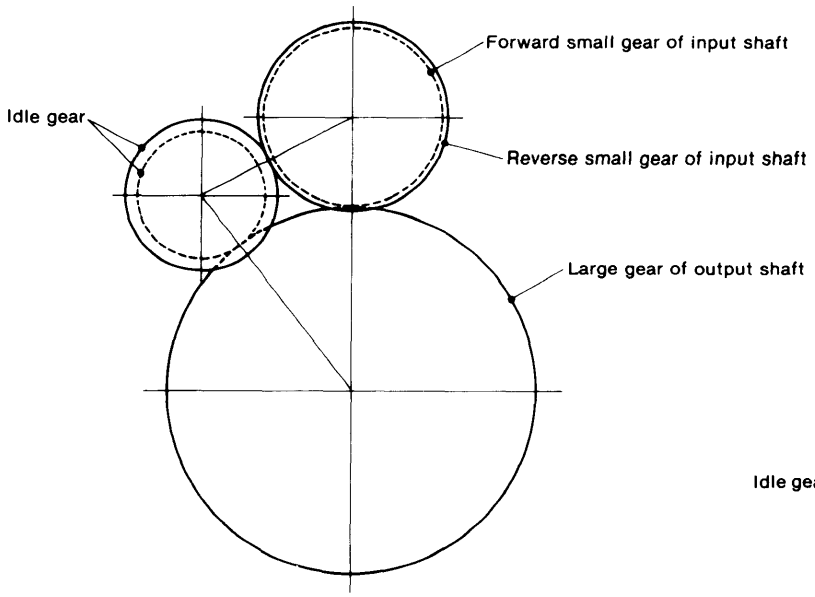

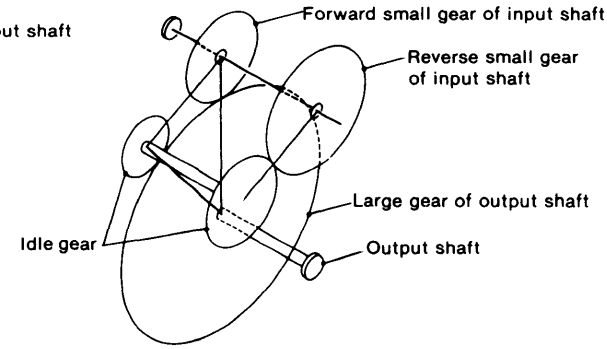

8-7 Remote control system

8-7.1 2QM20, 3QM30

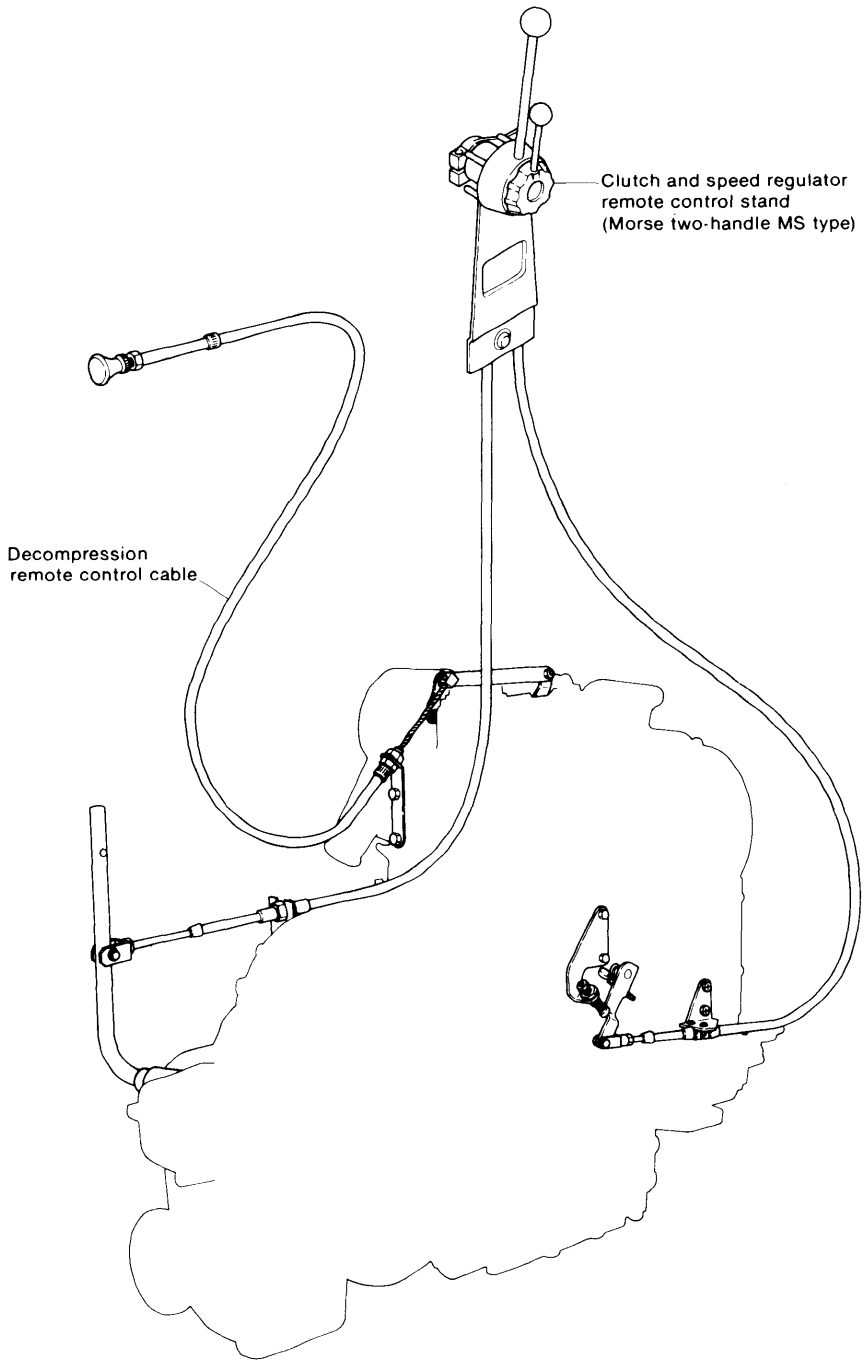

8-7.2 2QM20H, 3QM30H

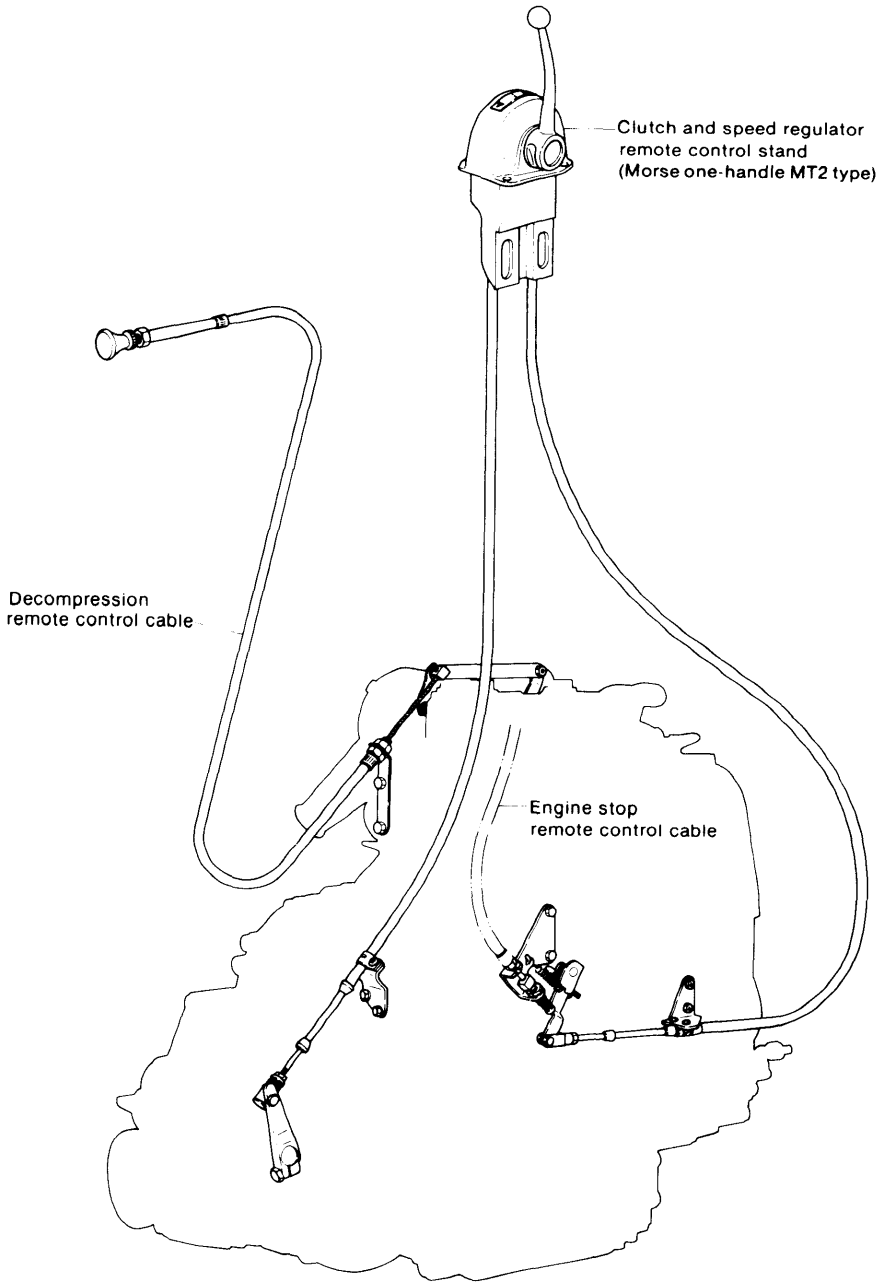

9. Accessories

○ Standard
△ Optional

		2QM20 3QM30	2QM20H 3QM30H	2QM20Y 3QM30Y	2QM20F 3QM30F
Fuel system	Fuel oil tank (30 liter)	△	△	△	△
	Fuel oil strainer	○	○	○	○
	Fuel oil feed pump (mechanical type)	○	○	○	○
Lubrication system	L.O. strainer	○	○	○	○
	L.O. drain pipe (crankcase side)	○	○	○	○
	L.O. evacuation pump	△	△	△	△
	L.O. pressure switch	○	○	○	○
Cooling system	Sea water pump of rubber impeller type	○	○	○	○
	Fresh water pump of centrifugal type	—	—	○	○
	Heat exchanger	—	—	○	○
	Sub-tank (Fresh water)	—	—	○	△
	Temperature switch	○	○	○	○
	Thermostat for cooling water	○	○	○	○
	Kingston cock, hose & strainer	△	△	○	△
Bilge	Bilge pump with bilge hose & strainer (mechanical tandem type)	△	△	△	△
Intake and exhaust system	Intake silencer	○	○	○	○
	Exhaust manifold (water cooling)	○	○	○	○
	Water mixing elbow with C.W. hose (L type)	△	△	△	△
	Water mixing elbow with C.W. hose (U type)	△	△	△	△
Starting system	Chain starting device with starting handle and chain cover	○	○	○	○
	Electric starting device: Starter motor, 35A-A.C. generator & regulator	○	○	○	○
	Electric starting device: Starter motor, 55A-A.C. generator & regulator kit	△	△	—	△
Remote control	Bracket for speed remote control cable	○	○	○	○
	Bracket for clutch remote control cable (Cable for stern side)	—	○ (2QM20H only)	—	○ (2QM20F only)
	Bracket for clutch remote control cable (Cable for front side)	○	○	—	○
	Bracket & cable clamp for decompression remote control	○	○	○	○
	Remote control cable for decompression (3-meter)	△	△	△	△

○ Standard
△ Optional

		2QM20 3QM30	2QM20H 3QM30H	2QM20Y 3QM30Y	2QM20F 3QM30F
Remote control	Idling adjuster	○	—	○	—
	Engine stop device with idling adjuster	—	○	—	○
	Cable for engine stop device (3-meter)	—	△	—	△
	One-handle remote control device	—	△	—	△
	Two-handle remote control device	△	—	△	—
Instrument & wiring	Dash board (Key switch, starter push-button switch, warning buzzer, L.O. lamp, C.W. lamp, charge lamp and wireharness 3-meter)	○	○	○	○
	Tachometer and sending unit (Electric)	△	△	△	△
	Battery switch	△	△	△	△
	Wireharness, extension (3-meter)	△	△	△	△
	Wireharness, extension (6-meter)	△	△	△	△
	Wireharness coupler for open board	△	△	△	△
Installation	Flexible mounting (4 pcs as a unit) (Fixed type)	△	△	△	△
	Flexible mounting (4 pcs as a unit) (Adjustable type)	△	△	△	△
	Flexible coupling	△	△	△	△
	Propeller shaft half coupling (Solid type, taper bored)	△	△	△	△
	Propeller shaft half coupling (Slit type, under bored)	△	△	△	△
Others	On board tools	○	○	○	○
	Special overhauling tools	△	△	△	△
	On board spare parts kit	△	△	△	△
	Packings kit	△	△	△	△
	Operation manual	○	○	○	○

10. Recommended Remote Control Cable

		2QM20(Y)	3QM30(Y)	2QM20H(F)	3QM30H(F)
Type of Control Stand		Morse Two-handle MS type		Morse One-handle MT 2 type	
Speed Control	Cable	Morse No. 33-C			
	Clamp	Morse No. A31804			
	Clevis	Morse No. A31800			
Clutch Control	Cable	Morse No. 64CB		Morse No. 33-C	
	Clamp	—		Morse No. A31804	
	Clevis	—	AD29132-001	—	
	Ball joint	—		Morse No. A31126	
Decompression Control	Cable	Yanmar No. 104214-03700			
	Bracket	Attached for all models			

CHAPTER 2

BASIC ENGINE

1. Cylinder Block 2-1
2. Cylinder Liner 2-3
3. Cylinder Head 2-6
4. Piston 2-19
5. Connecting Rod 2-23
6. Crankshaft 2-26
7. Camshaft 2-34
8. Timing Gear 2-37

1. Cylinder Block

1-1 Construction

The cylinder block is a high-quality cast iron casting, with integral cylinders and deep skirt crankcase construction. As a result of stress analyses, the shape and thickness of each part has been optimized, and special ribs employed which not only increase the strength and rigidity of the block, but also reduce noise.

2QM20(H)

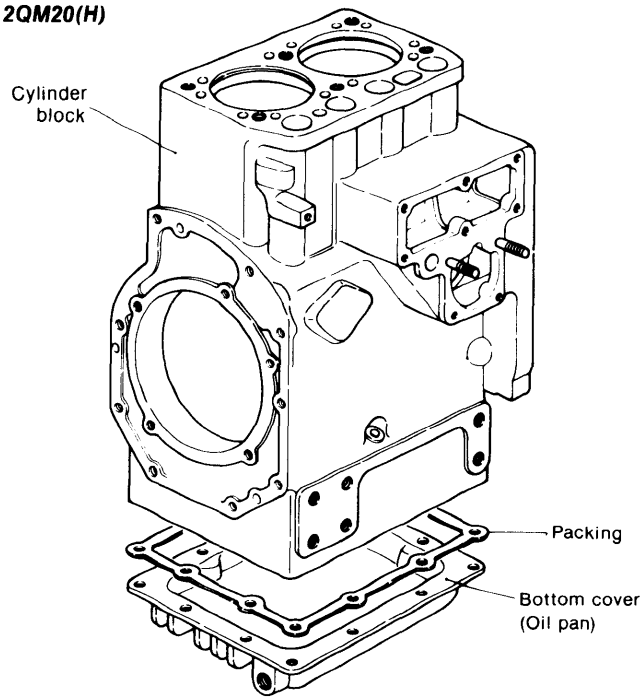

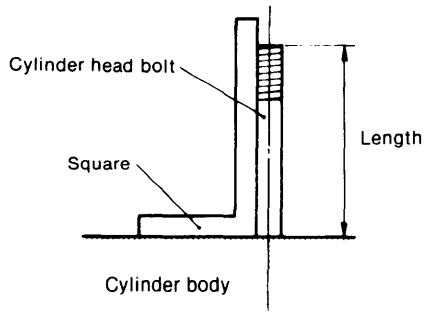

	kg-m
Tightening torque	9 ~ 9.5

2QM20(H)

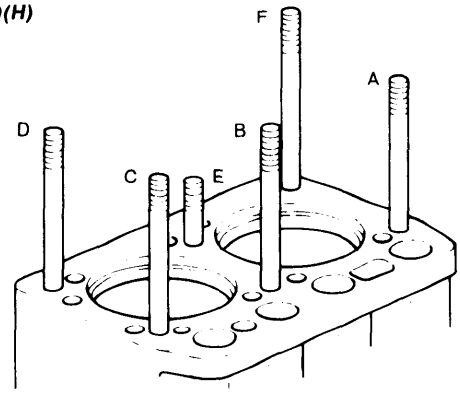

mm (in.)

Stud bolt	Length
A, B, C, D	About 108 (4.25)
E	About 50 (1.97)
F	About 121 (4.76)

3QM30(H)

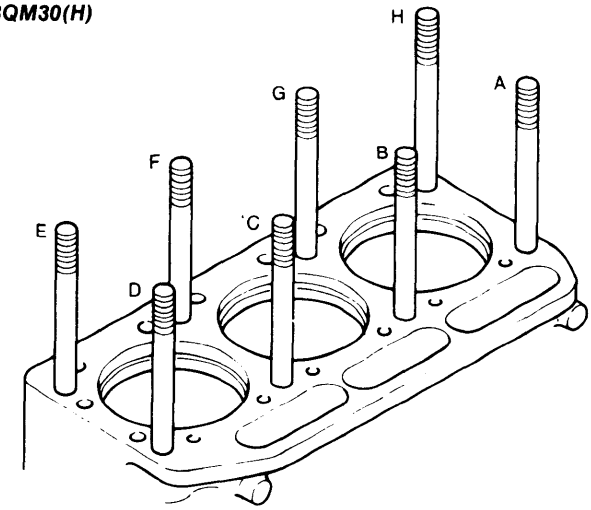

mm (in.)

Stud bolt	Length
A, B, C, D, E, F, G	About 108 (4.25)
H	About 121 (4.76)

1-2 Cylinder block inspection

1-2.1 Inspecting each part for cracks

If the engine has been frozen or dropped, visually inspect it for cracks and other abnormalities before disassembling. If there are any abnormalities or the danger of any abnormalities occurring, make a color check.

1-2.2 Inspecting the water jacket of the cylinder for corrosion

Inspect the cooling water passages and cylinder liner contact parts for sea water corrosion, scale, and rust. Replace the cylinder body if corrosion, scale or rust is severe.
Cylinder body jacket corrosion depth limit: 1.5mm

1-2.3 Cylinder head bolts

Check for loose cylinder head bolts and for cracking caused by abnormal tightening, either by visual inspection or by a color check.
Replace the cylinder block if cracked.

1-2.4 Oil and water passages

Check the oil and water passages for clogging and build-up of foreign matter.

1-2.5 Cylinder bore and ledge

Perform a color check on the ledge at the top of the cylinder head bore, and replace the cylinder if any cracks are detected.

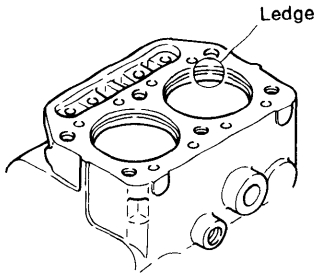

1-2.6 Color check flaw detection procedure

(1) Clean the inspection point thoroughly.
(2) Procure the dye penetration flaw detection agent. This agent comes in spray cans, and consists of a cleaner, penetrant, and developer in one set.

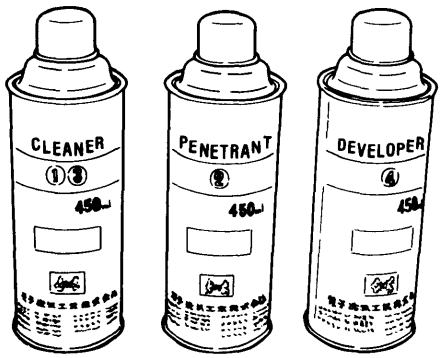

(3) Pretreat the inspection surface with the cleaner. Spray the cleaner directly onto the inspection surface, or wipe the inspection surface with a cloth moistened with the cleaner.
(4) Spray the red penetration liquid onto the inspection surface. After cleaning the inspection surface, spray the red penetrant (dye penetration flaw detection agent) onto it and allow the liquid to penetrate for 5-10 minutes.
If the penetrant fails to penetrate the inspection surface because of the ambient temperature or other conditions, allow it to dry and respray the inspection surface.
(5) Spray the developer onto the inspection surface. After penetration processing, remove the residual penetrant from the inspection surface with the cleaner, and then spray the developer onto the inspection surface. If the inspection surface is flawed, red dots or lines will appear on the surface within several minutes. When spraying the developer onto the inspection surface, hold the can about 30—40cm from the surface and sweep the can slowly back and forth to obtain a uniform film.
(6) Reclean the inspection surface with the cleaner.

NOTE: Before using the dye penetration flaw detection agent, read its usage instructions thoroughly.

1-3 Cylinder bore measurement

Measure the inside diameter of the part which contacts the cylinder liner, and repair or replace if it is severely distorted.

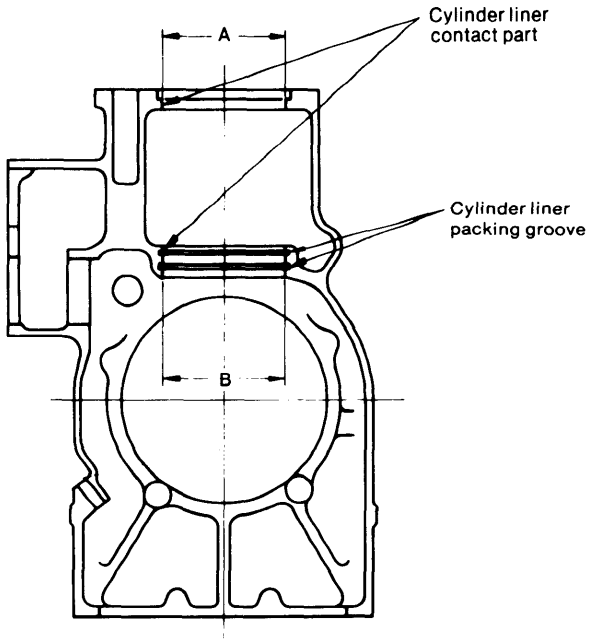

mm (in.)

	Maintenance standard	Roundness	Maximum allowable distortion
Top A	$88^{+0.035}_{0}$ (3.4646 ~ 3.4659)	0.02 (0.0008)	0.1 (0.0039)
Bottom B	$86^{+0.035}_{0}$ (3.3858 ~ 3.3872)	0.02 (0.0008)	0.1 (0.0039)

2. Cylinder Liner

2-1 Construction

High-quality special high-phosphurous cast iron wet type cylinder liners are used. The outside of the cylinder liner is machined to a uniform thickness to prevent local heat expansion and improve durability. Two O-rings (rubber packing) are installed at the cylinder liner skirt to prevent cylinder liner deformation and distortion, and to keep cooling water from leaking into the crankcase.
The grooves for two O-rings are machined in the cylinder block.

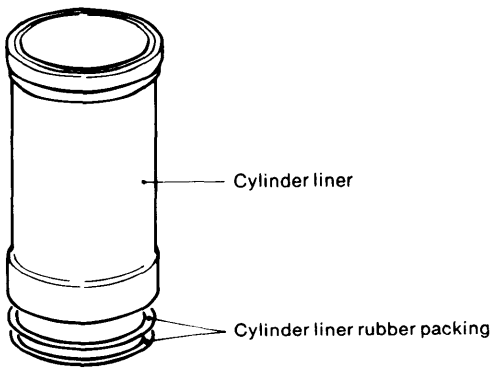

2-2 Inspection

Since the piston and piston rings constantly slide against the cylinder liner while the engine is in operation, and side pressure is applied to the cylinder liner by the movement of the crankshaft, eccentric wear occurs easily.
Moreover, if lubrication and cooling are insufficient, the inner surface will be damaged or rusted. Inspect the inner surface and replace the cylinder liner if the surface is noticeably damaged or rusted.

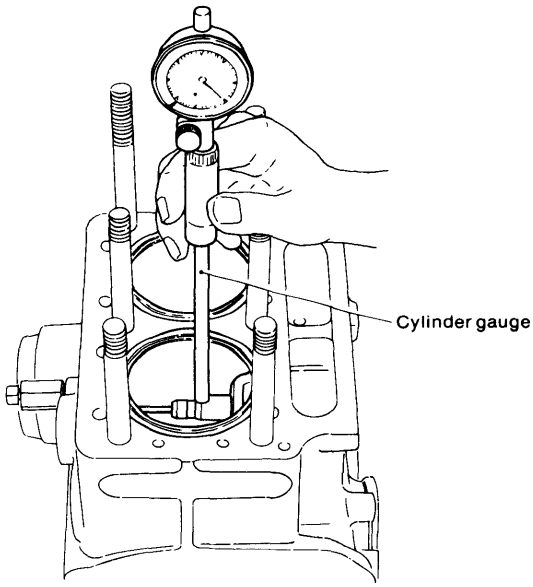

2-3 Cylinder liner bore diameter measurement

Measure the bore diameter of the cylinder liner with a cylinder gauges at the positions shown in the figure.
Replace the cylinder liner when the measured value exceeds the wear limit.

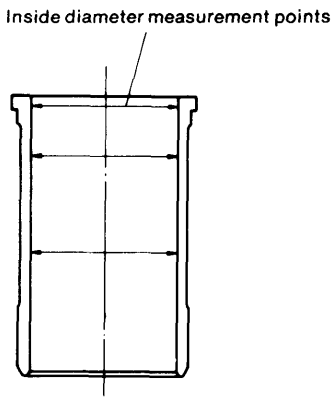

mm (in.)

	Maintenance standard	Clearance at assembly	Maximum allowable clearance	Wear limit
Cylinder liner diameter	ø88 (3.4646)	0.14 (0.0055)	0.4 (0.0157)	0.15 (0.0059)
Piston outside diameter	ø88 (3.4646)			
Cylinder liner circularity	0.02 (0.0008)	—	—	0.1 (0.0039)

2-4 Cylinder liner replacement

(1) Pull the cylinder liner to the top of the cylinder block as shown in the figure, using the special cylinder liner puller tool.

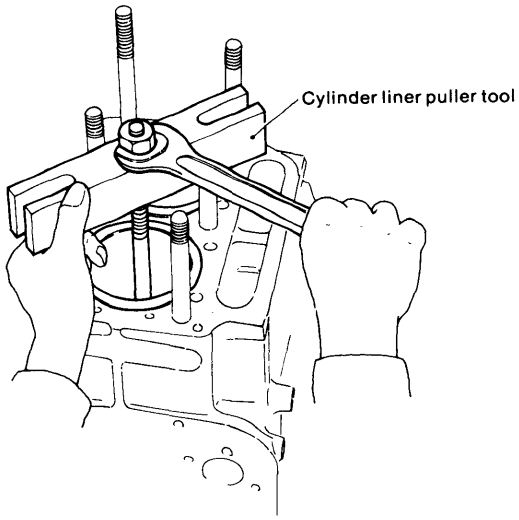

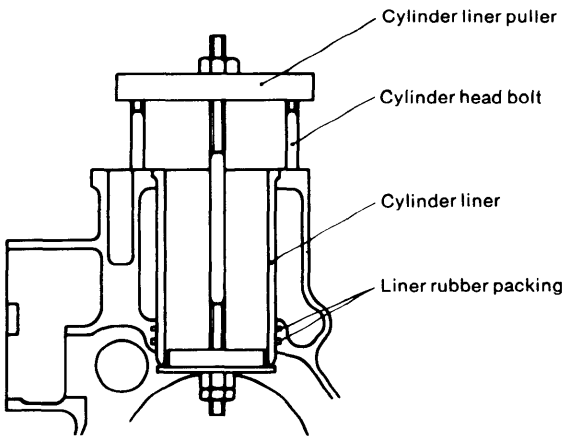

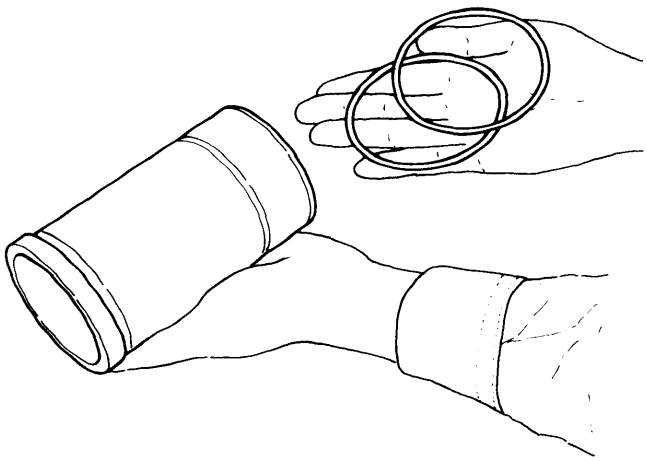

(2) Remove the rust from the area where the cylinder liner contacts the cylinder block.
(3) Insert the rubber packing, taking care not to twist it.
(4) Coat the outside of the cylinder liner with waterproof paint or grease.

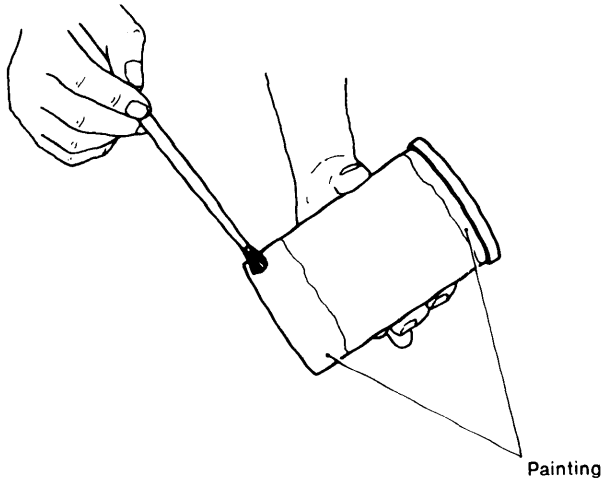

(5) Push the cylinder liner into the cylinder liner hole of the cylinder block.

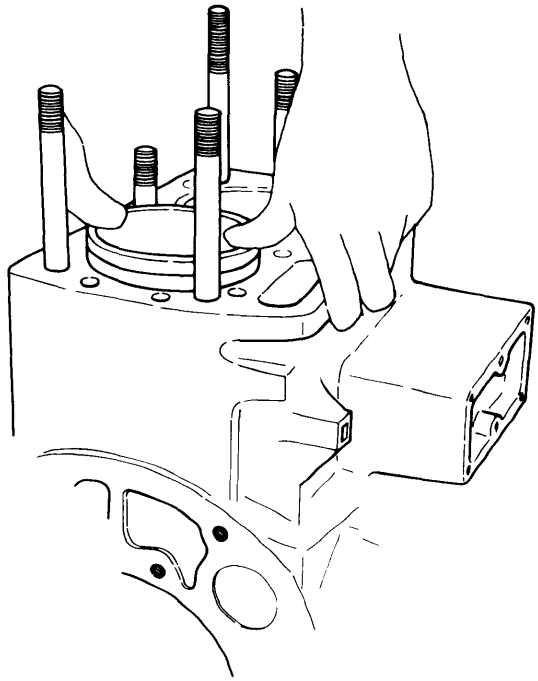

(6) After inserting the liner, measure its bore diameter.
(7) Measure the amount of liner projection.

2-5 Measuring cylinder liner projection

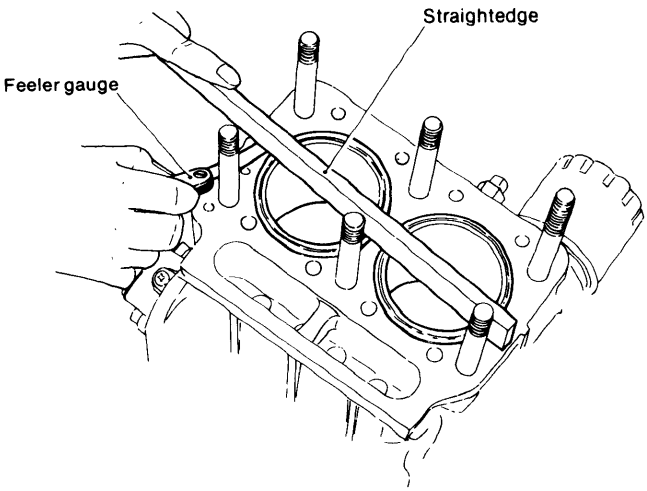

If the cylinder liner projects too far from the block, the torque reactance will increase, causing the compression ratio to drop and the gasket packing to be damaged.
Excessive cylinder liner projection is frequently caused by incomplete removal of the rust at the ledge (part A of figure) of the cylinder block.

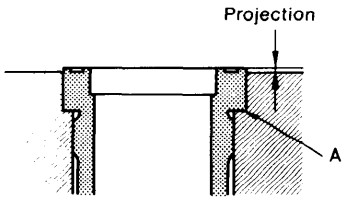

mm (in.)

Cylinder liner projection	0.03 ~ 0.10 (0.0012 ~ 0.0039)

3. Cylinder Head

3-1 Construction

The cylinder head is an integral two/three cylinder type which is bolted to the block with 6/8 bolts.
The unique Yanmar swirl type precombustion chambers are at an angle in the cylinder head, and form the combustion chambers, together with the intake and exhaust valves. Large diameter intake valves and smoothly shaped intake and exhaust ports provide high intake efficiency and superior combustion performance.

Special consideration has also been given to the shape of the cooling water passages so that the combustion surface and precombustion chamber are uniformly cooled by an ample water flow.
Covers on the front and rear of the cylinder head are plated with anti-corrosive zinc to prevent electrolytic corrosion in the jacket.

3-1.1 2QM20(H)

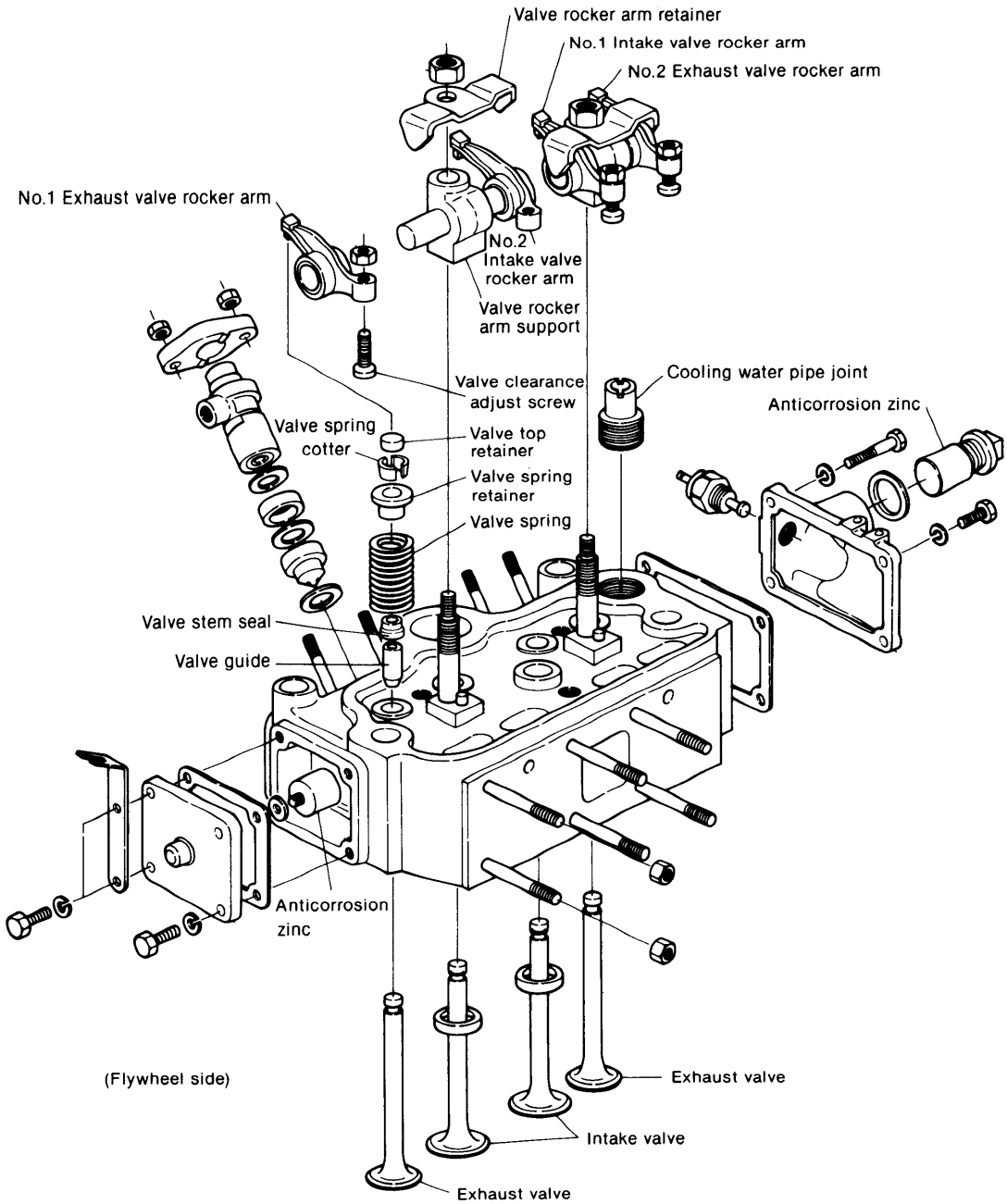

3-1.2 3QM30(H)

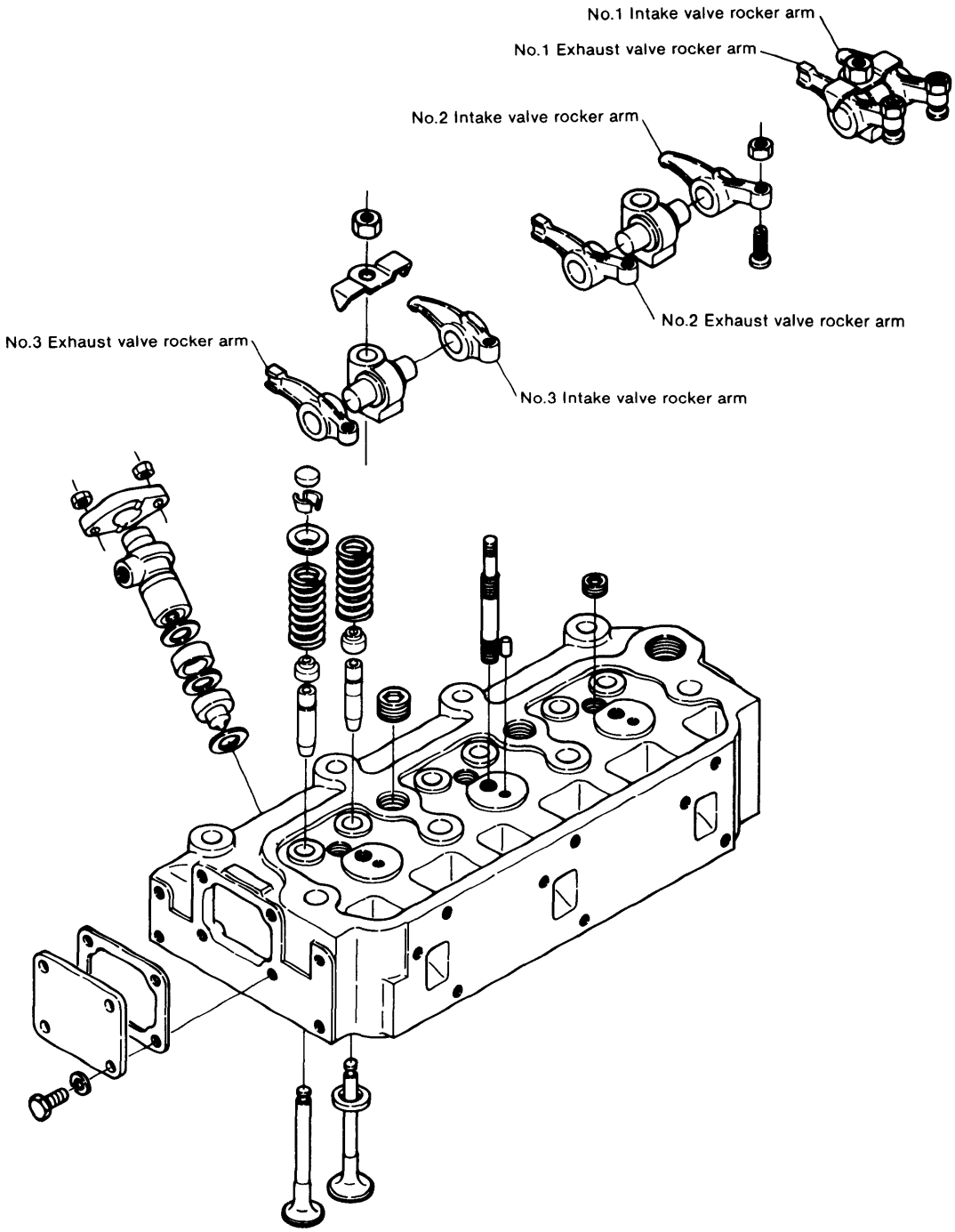

2QM20 and 3QM30 models are basically identical in construction and parts. The major difference is in the intake and exhaust valve arrangement and construction of intake and exhaust ports.

3-2 Cylinder head inspection and measurement

3-2.1 Measurement of carbon build-up at combustion surface and intake and exhaust ports

Visually check for carbon build-up around the combustion surface and the port near the intake and exhaust valve seats, and remove any build-up.
When a large amount of carbon has built up, check the top of the chamber combustion for oil flow at the intake and exhaust valve guides, and take suitable corrective action.

3-2.2 Deposit build-up at water passages

Check for build-up of deposit at the water passages, and remove any deposit with a deposit remover. When a large amount of deposit has built up, check each part of the cooling system.

3-2.3 Inspection of corrosion at water passages and anticorrosion zinc

Inspect the state of corrosion of the water passages, and replace the cylinder head when corrosion is severe.
Corrosion pitting limit: 2mm (0.0787in.)
Inspect the anticorrosion zinc on the cylinder head cover, and replace the zinc when it has worn over the wear limit.

Anticorrosion zinc wear limit: Volumetric ratio with new zinc = 2/3

3-2.4 Cracking of combustion surface

The combustion surface is exposed to high temperature, high pressure gas and low temperature air, and is repeatedly flexed during operation. Moreover, it is used under extremely severe conditions, such as the high temperature difference between the combustion surface and cooling water passages.
Inspect the combustion surface for cracking by the color check, and replace the cylinder head if any cracking is detected. At the same time, check for signs of overloading and check the cooling water flow.

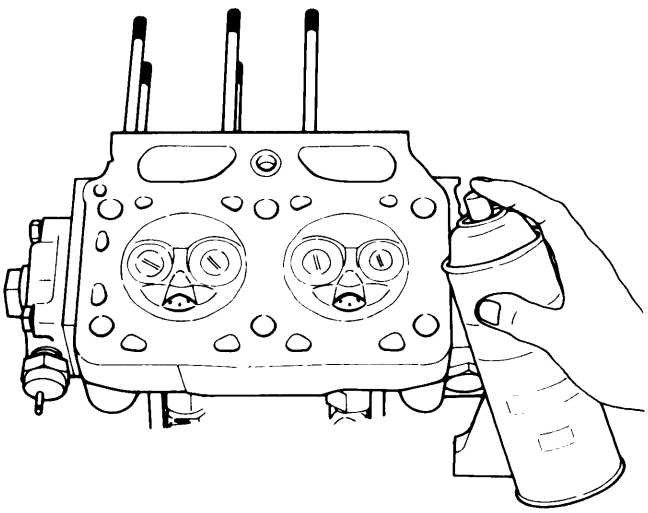

3-2.5 Cylinder head distortion

Distortion of the cylinder head causes gasket packing damage, compression leakage, change in compression, etc.
Measure the distortion as described below, and replace the cylinder head when the wear limit is exceeded. Since distortion of the cylinder head is caused by irregular tightening forces, faulty repair of the mounting face, and gasket packing damage, these must also be checked.

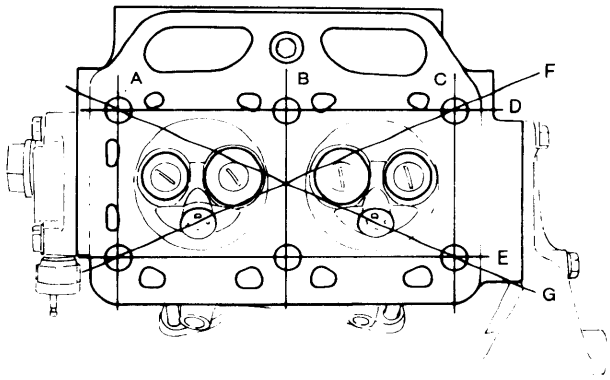

mm (in.)

	Maintenance standard	Wear limit
Cylinder head distortion	0.03 (0.00118)	0.1 (0.0039)

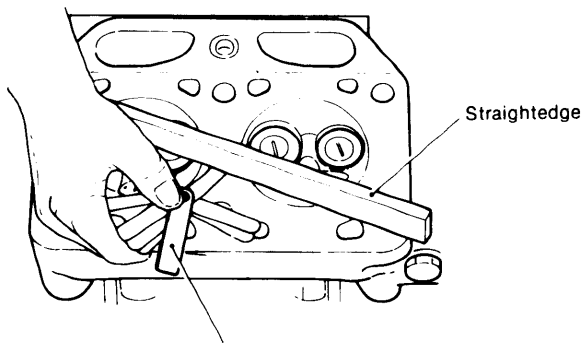

Measurement procedure

(1) Clean the cylinder head tightening surface.
(2) Place a straightedge across two symmetrical points at the four sides of the cylinder head, as shown in the figure.
(3) Insert feeler gauges between the straightedge and the cylinder head combustion face.
(4) The thickness of the largest feeler gauge that can be inserted is the amount of distortion.

3-2.6 Cylinder head valve seat

The valve seats become wider with use. If the seats become wider than the maintenance standard, carbon build-up at the seats will cause compression leakage. On the other hand, if the seats are too narrow, they will wear quickly and heat transmission efficiency will deteriorate. Clean the carbon and other foreign matter from the valve seats, and check that the seats are not scored or dented.

Measure the seat width with vernier calipers, and repair or replace the seat when the wear limit is exceeded.
When the valves have been lapped and/or ground, measure the amount of valve recess, and replace the valve when the wear limit is exceeded.

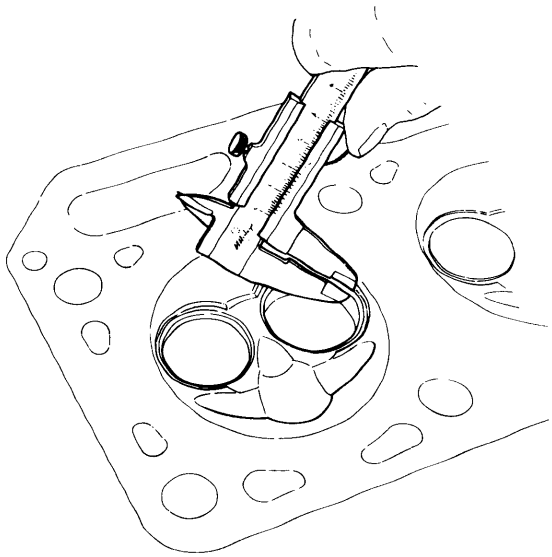

mm (in.)

	Maintenance standard	Wear limit
Seat width	2.12 (0.0835)	2.5 (0.0984)
Seat angle	90°	—

(1) Lapping the valve seat.
When scoring and pitting of the valve seat is slight, coat the seat with valve compound mixed oil, and lap the seat with a lapping tool.
At this time, be sure that the compound does not flow into the valve stem and valve guide.

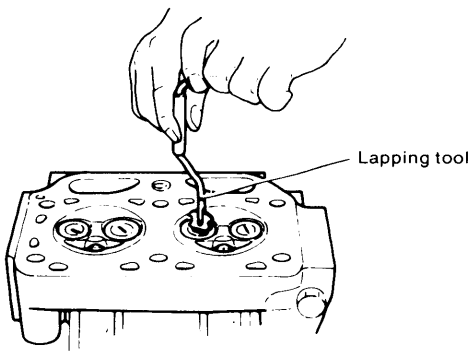

(2) Correcting valve seat width.
When the valve seat is heavily pitted and when the seat width must be corrected, repair with a seat grinder.
1) Repair pitting of the seat face with a 45° grinder.
2) Since the valve seat is larger than the initial value, correct the seat width to the maintenance standard by grinding the inside face of the seat with a 70° grinder.
3) Grind the outside face of the valve seat with a 15° grinder, and finish the seat width to the standard value.

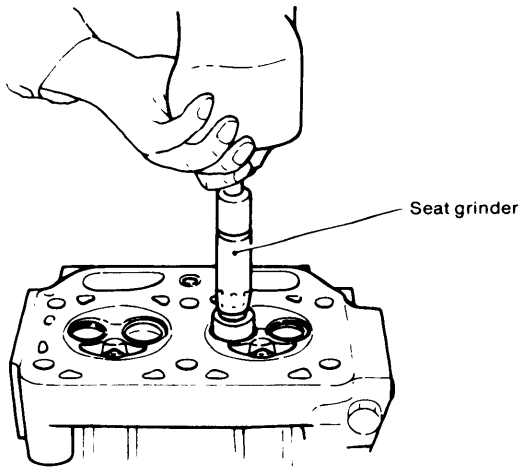

4) Mix the compound with oil, and lap the valve.
5) Finally, lap with oil.

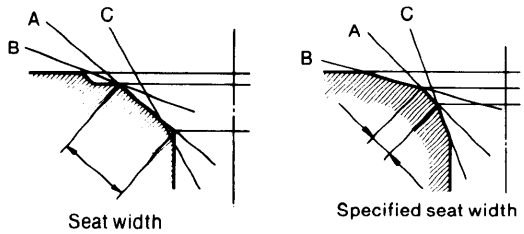

(A) Grind with a 45° grinder
(B) Grind with a 15° grinder
(C) Grind with a 65° ~ 75° grinder

NOTE: When the valve seat has been corrected with a seat grinder, insert an adjusting shim between the valve spring and cylinder head.

3-2.7 Measuring valve recess

When the valve has been lapped many times, the valve will be recessed and will adversely affect the combustion performance. Therefore, measure the valve recess, and replace the valve and cylinder head when the wear limit is exceeded.

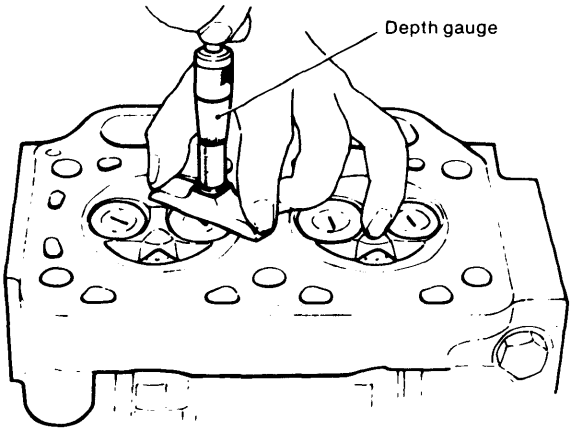

mm (in.)

	Maintenance standard	Wear limit
Valve recess	1.05 (0.0413)	1.45 (0.0571)

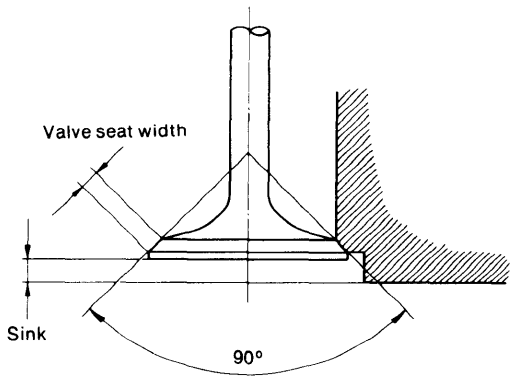

3-2.8 Rocker arm support positioning pin

Check if the guide pin is damaged or if the hole is clogged, and replace the pin if faulty.

3-3 Dismounting and remounting the cylinder head

When dismounting and remounting the cylinder head, the mounting bolts must be removed and installed gradually and in the prescribed sequence to prevent damaging the gasket packing and to prevent distortion of the cylinder head. Since the tightening torque and tightening sequence of the mounting bolts when remounting the cylinder head are especially important from the standpoint of engine performance, the following items must be strictly observed.

3-3.1 Cylinder head stud bolt assembly sequence

(1) Check for loose cylinder head stud bolts, and lock any loose bolts with two nuts and then tighten to the prescribed torque.
Cylinder head stud bolt tightening torque: 9.0 ~ 9.5 kg-m (65.10 ~ 68.71 ft-lb)

(2) Checking the gasket packing mounting face.
Confirm correct alignment of the front and rear of the gasket packing, and install the packing by coating both sides with Three Bond 50.

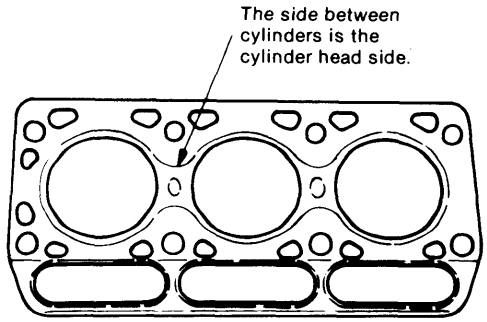

(3) Installing the cylinder head ass'y.
Position the cylinder head ass'y parallel to the top of the cylinder block, and install the ass'y any the block, being careful that the cylinder head ass'y does not touch the threads of the cylinder head bolts.

3-3.2 Tightening the cylinder head tightening nuts

(1) Cylinder head nut tightening sequence
1) Coat the threads of the cylinder head bolts with lubricating oil, and screw the cylinder head nuts onto the bolts.

2QM20(H)

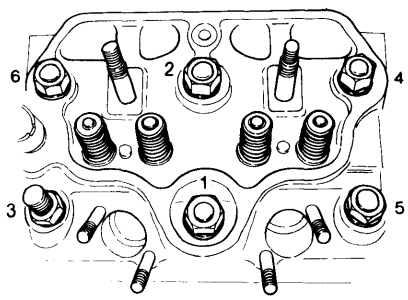

3QM30(H)

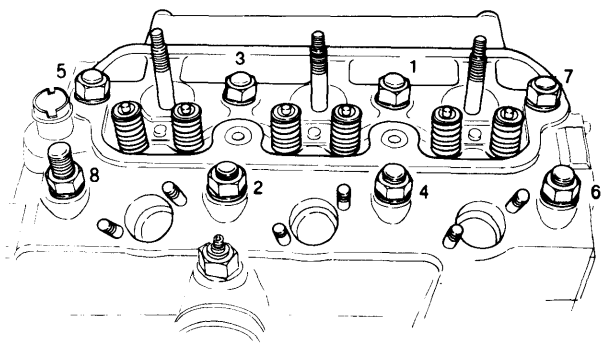

2) First, tighten the nuts sequentially to 1/3 (6kg-m, 43.40 ft-lb) of the prescribed torque.
3) Second, tighten the nuts sequentially to a torque of 12kg-m (86.80 ft-lb).
4) Third, tighten the nuts to the prescribed torque of 16 ~ 18kg-m (115.7 ~ 130.2 ft-lb).
5) Recheck that all the nuts have been properly tightened.

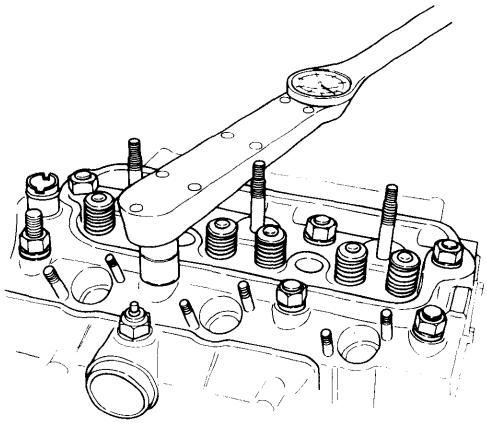

3-3.3 Cylinder head nut loosening sequence

When loosening the cylinder head nuts, reverse the tightening sequence. The cylinder head nut loosening sequence is shown in the figue.

2QM20(H)

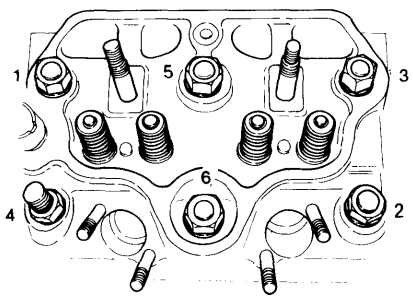

3QM30(H)

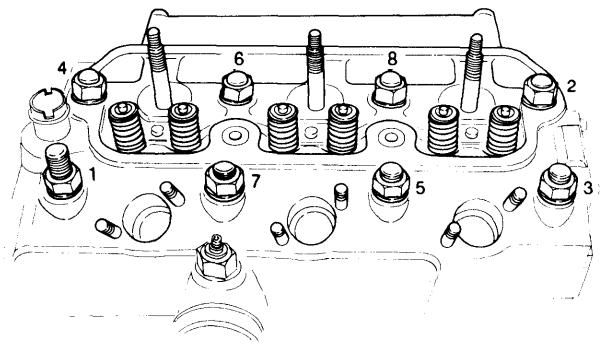

3-4 Intake and exhaust valves, valve guide and valve spring

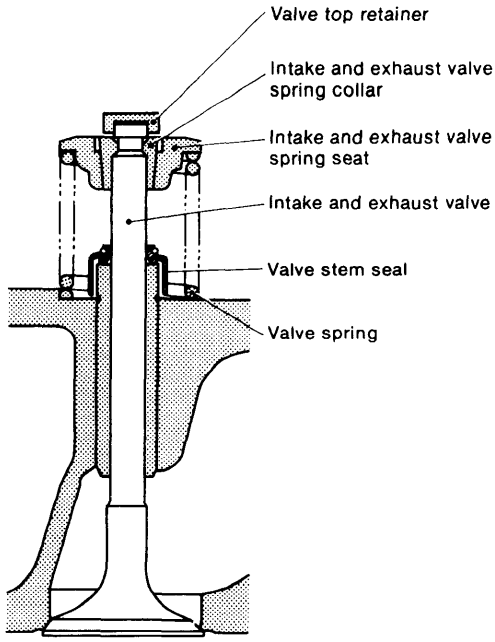

3-4.1 Inspecting and measuring the intake and exhaust valves

(1) Valve seat wear and contact width.
Inspect valve seats for carbon build-up and heavy wear.
Also check if each valve seat contact width is suitable.
If the valve seat contact width is narrower than the valve seat width, the seat angle must be checked and corrected.

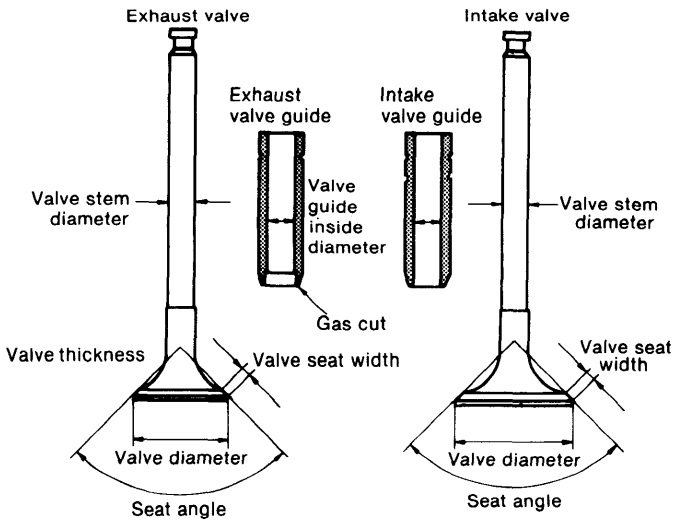

mm (in.)

Intake valve diameter	ø38.5 (1.5157)
Exhaust valve diameter	ø32.5 (1.2795)
Valve seat width	2.12 (0.0835)
Valve seat angle	90°

NOTE: Note that the intake valve and exhaust valve have a different diameter.

(2) Valve stem bending and wear.
Check for valve stem wear and staining, and repair when such damage is light. Measure the outside diameter and bend, and replace the valve when the wear limit is exceeded.

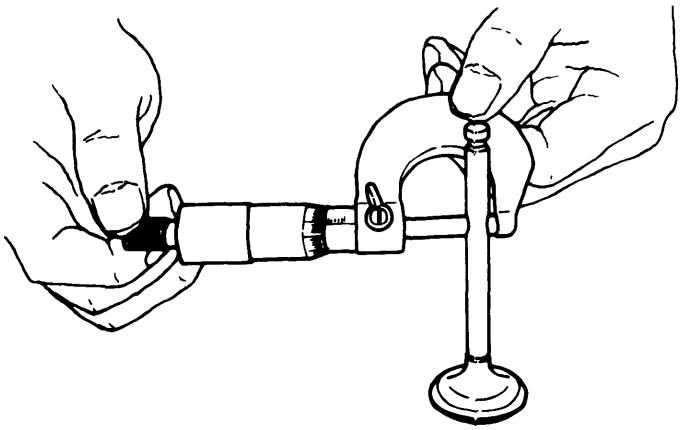

mm (in.)

	Maintenance standard	Wear limit
Valve stem outside diameter	ø8.0 (0.3149)	ø7.9 (0.3110)
Valve stem bend	—	0.03 (0.00118)

(3) Valve seat hairline cracks.
Inspect the valve seat by the color check, and replace the seat if cracked.

3-4.2 Inspecting and measuring valve guides

The valve guide is different for the intake valve and exhaust valve in that the inner face of the exhaust valve has a gas cut.
While, the intake valve guide has an indication line around the outside.
Be sure that the correct guide is used when replacing the guides.

(1) Floating of the intake and exhaust valve guides.
Check for intake and exhaust valve guide looseness and floating with a test hammer, and replace loose or floating guides with guides having an oversize outside diameter.

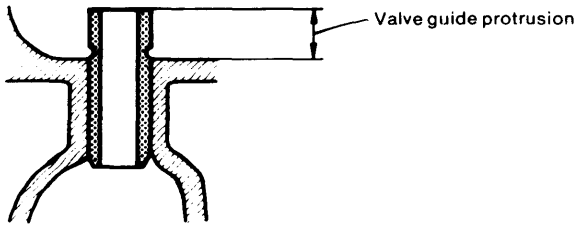

(2) Intake and exhaust valve guide fitting.
Always fit the intake and exhaust valve guides with a press. Never tap with a hammer.

mm (in.)

Tightening allowance	0.015 ±0.014 (0.00004 ~ 0.00114)

Fit the intake and exhaust valve guides until the bottom of the groove around the outside of the valve guide is flush with the end of the cylinder head.

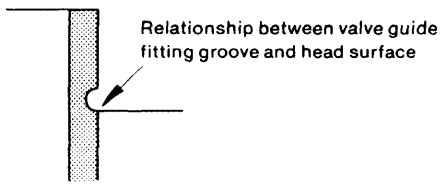

(3) Measuring the valve guide inside diameter.
Measure the valve guide inside diameter and clearance, and replace the guide when wear exceeds the wear limit.

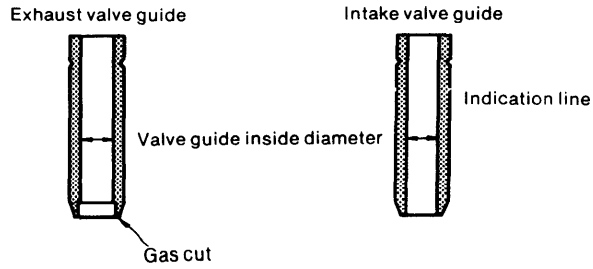

mm (in.)

		Maintenance standard	Clearance at assembly	Maximum allowable clearance	Wear limit
Intake	Valve guide inside diameter (after assembly)	ø8 (0.3150)	0.040 ~ 0.065 (0.0016 ~ 0.0026)	0.15 (0.0059)	ø8.08 (0.3181)
	Valve stem outside diameter	ø8 (0.3150)			ø7.90 (0.3110)
Exhaust	Valve guide inside diameter (after assembly)	ø8 (0.3150)	0.050 ~ 0.075 (0.002 ~ 0.003)	0.15 (0.0059)	ø8.08 (0.3181)
	Valve stem outside diameter	ø8 (0.3150)			ø7.90 (0.3110)

3-4.3 Valve spring

(1) Valve spring inclination.
Since inclination of the valve spring is a direct cause of eccentric contact of the valve stem, always check it at disassembly.
Stand the valve upright on a stool, and check if the entire spring contacts the gauge when a square gauge is placed against the outside diameter of the valve spring.
If there is a gap between the gauge and spring, measure the gap with a feeler gauge.
When the valve spring inclination exceeds the wear limit, replace the spring.

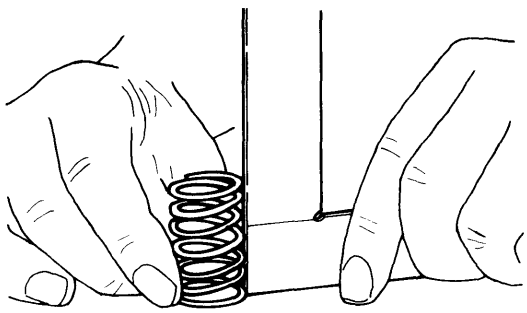

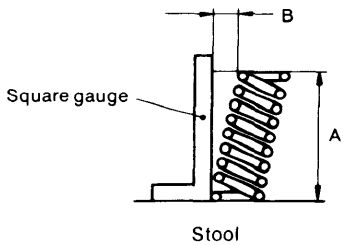

(2) Valve spring free length.
Measure the free length of the valve spring, and replace the spring when the wear limit is exceeded.

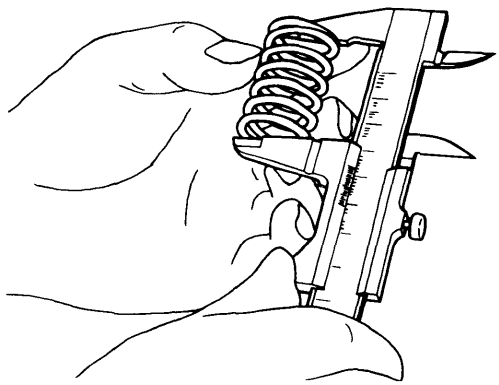

mm (in.)

	Maintenance standard	Wear limit
Valve spring free length (A)	38 (1.50)	37.7 (1.48)
Valve spring inclination (B)	—	1.14 (0.04)
Mounted valve spring load 6.75mm (0.27in.) compression	8.85kg (19.5 lb)	8.45kg (18.6 lb)

NOTE: Valve spring inclination (perpendicularity): B/A within 0.03 (A = 38.0mm) (B = 1.14mm)

3-4.4 Valve stem seal

A valve stem seal is assembled at the top of the valve guide and the valve stem chamber oil is sucked into the combustion chamber through the valve guide (oil down) to prevent an increase in oil consumption.
The valve stem seal must always be replaced whenever it has been removed.
When assembling, coat the valve stem with engine oil before inserting.

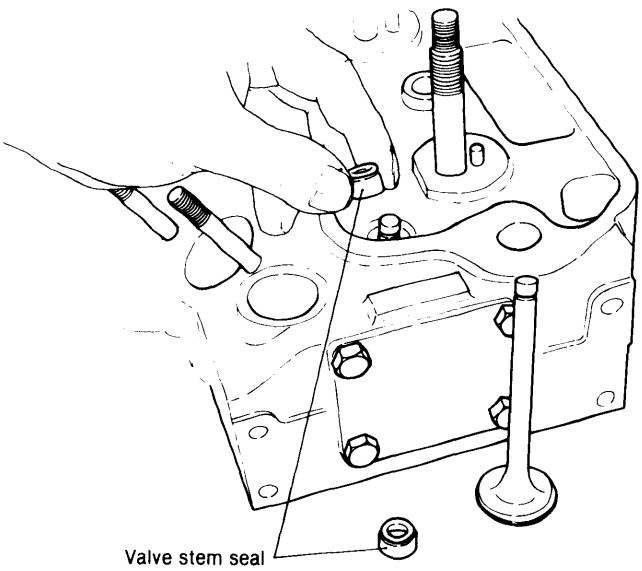

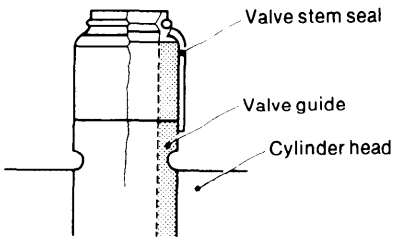

3-4.5 Spring retainer and spring cotter pin

Inspect the inside face of the spring retainer and the outside surface of the spring cotter pin, and the contact area of the spring cotter pin inside surface and the notch in the head of the valve stem. Replace the spring retainer and spring cotter pin when the contact area is less than 70% or when the spring cotter pin has been recessed because of wear.

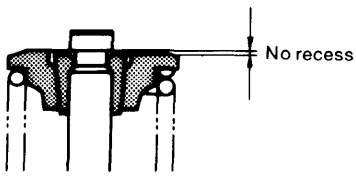

3-5 Precombustion chamber and top clearance

3-5.1 Precombustion chamber

Remove the packing and insulation packing at the precombustion chamber's front and rear chambers, and inspect.
Check for burning at the front end of the precombustion chamber front chamber, acid corrosion at the precombustion chamber rear chamber, and for burned packing.
Replace if faulty.

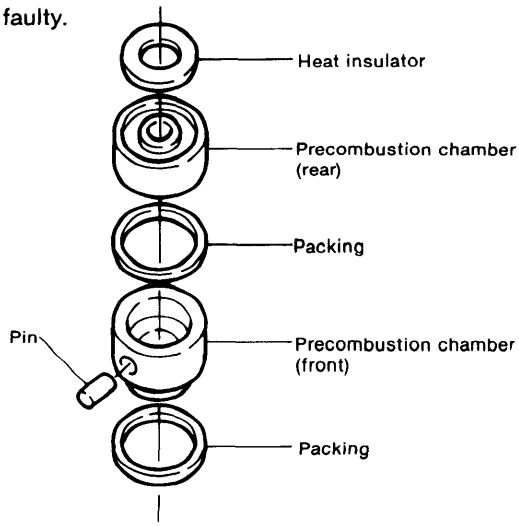

3-5.2 Insulation packing

The insulation packing prevents transmission of heat from the precombustion chamber to the nozzle valve and serves to improve the nozzle's durability.
Always put in new insulation packing when it has been disassembled.

3-5.3 Top clearance

Top clearance is the size of the gap between the cylinder head combustion surface and the top of the piston at top dead center.
Since top clearance has considerable effect on the combustion performance and the starting characteristic of the engine, it must be checked periodically.

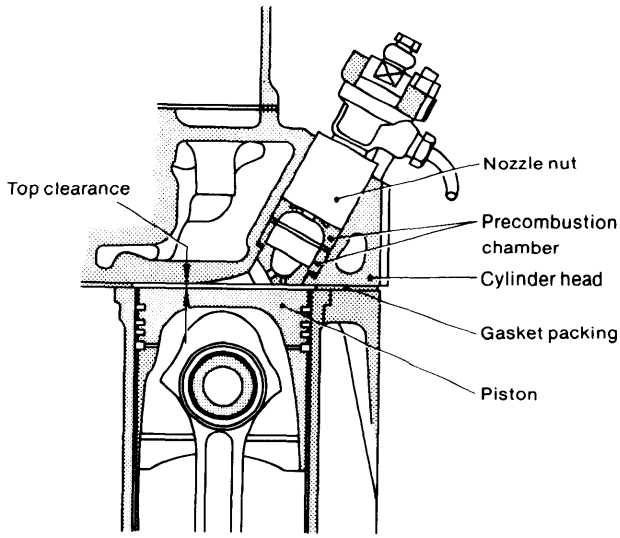

(1) Top clearance measurement
1) Check the cylinder head mounting bolts and tightening torque.
2) Remove the fuel injection valve and precombustion chamber.
3) Lower the piston at the side to be measured.
4) Insert quality fuse wire (ø1.2mm, 0.472in.) through the nozzle holder hole. (Be careful that the wire does not enter the intake and exhaust valve and the groove in the combustion surface.)
5) Crush the fuse wire by moving the piston to top dead center by slowly cranking the engine by hand.
6) Lower the piston by hand cranking the engine and remove the crushed fuse wire, being careful not to drop it.
7) Measure the thickness of the crushed part of the fuse wire with vernier calipers or a micrometer.

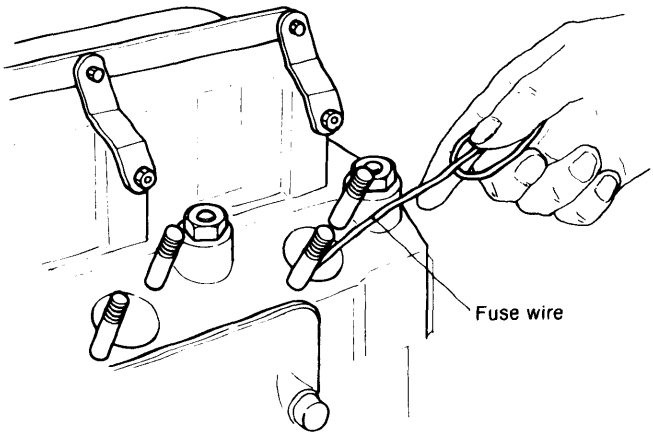

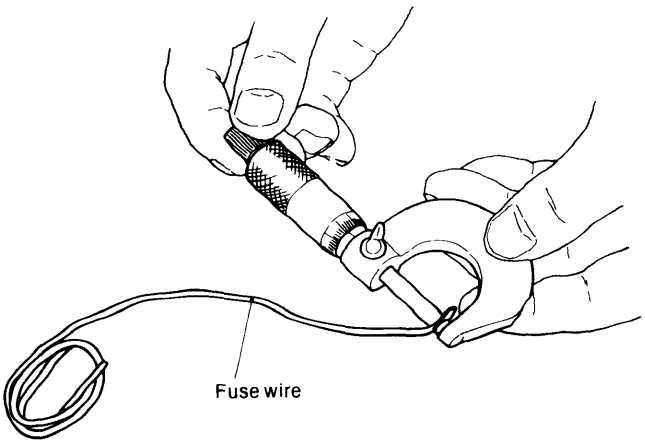

(2) Top clearance value.

mm (in.)

Top clearance	1.08 ±0.1 (0.0386 ~ 0.0465)

When the top clearance value is not within the above range, check for damaged gasket packing, distortion of the cylinder head combustion surface, or other abnormal conditions.

3-6 Intake and exhaust valve rocker arm

Since the intake and exhaust valve rocker arm shaft and bushing clearance and valve head and push rod contact wear are directly related to the valve timing, and have an effect on engine performance, they must be carefully serviced.

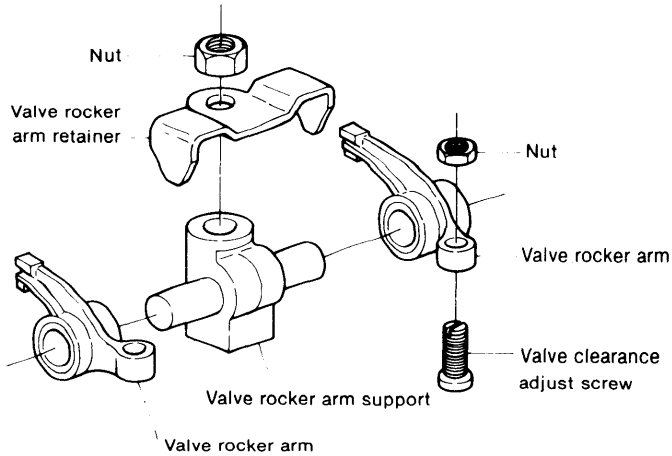

3-6.1 Measuring the valve rocker arm shaft and bushing clearance

Measure the outside diameter of the valve rocker arm shaft and the inside diameter of the bushing, and replace the rocker arm or bushing if the measured value exceeds the wear limit.
Replace a loose valve rocker arm shaft bushing with a new bushing. However, when there is no tightening allowance, replace the valve rocker arm.

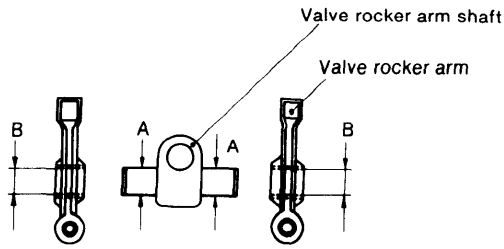

mm (in.)

		Maintenance standard	Clearance at assembly	Maximum allowable clearance	Wear limit
Intake and exhaust valve rocker arm shaft outside diameter	A	ø17 (0.6693)	0.016 ~ 0.052 (0.0006 ~ 0.0020)	0.15 (0.0059)	ø16.9 (0.6654)
Intake and exhaust valve rocker arm bushing inside diameter (assembled)	B	ø17 (0.6693)			ø17.1 (0.6732)

3-6.2 Valve rocker arm and valve top retainer contact and wear

Check the valve rocker arm and valve top retainer contact, and replace when there is any abnormal wear or peeling.

3-6.3 Valve clearance adjusting screw

Inspect the valve clearance adjusting screw and push rod contact, and replace when there is any abnormal wear or peeling.

3-6.4 Classification of the intake and exhaust valve rocker arms

Since the intake and exhaust valve rocker arms have different shapes, care must be exercised in service and assembly.

(1) 2QM20 (H)

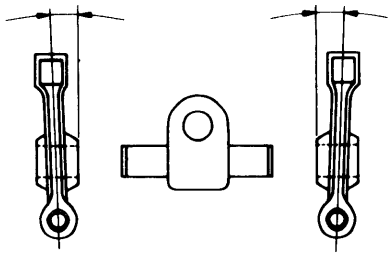

No.1 Intake valve rocker arm
No.2 Exhaust valve rocker arm

No.1 Exhaust valve rocker arm
No.2 Intake valve rocker arm

(2) 3QM30 (H)

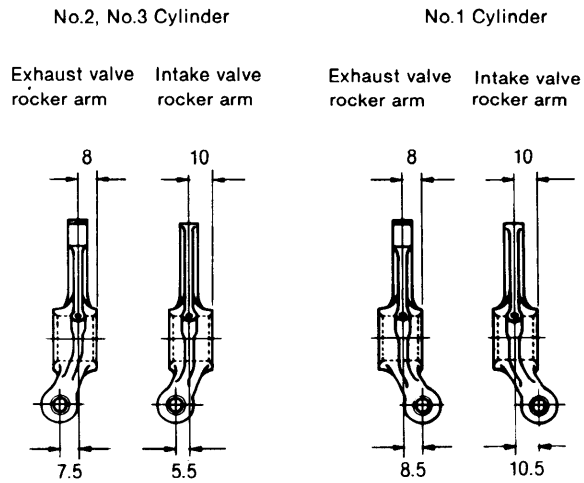

3-7 Adjusting intake and exhaust valve head clearance

Adjustment of the intake and exhaust valve head clearance governs the performance of the engine, and must be performed accurately. The intake and exhaust valve head clearance must always be checked and readjusted, as required, when the engine is disassembled and reassembled, and after every 300 hours of operation. Adjust the valve head clearance as described below.

3-7.1 Adjustment

Make this adjustment when the engine is cold.

(1) Remove the valve rocker arm cover.

(2) Crank the engine and set the No. 1 (flywheel side) piston to top dead center (TDC) on the compression stroke.

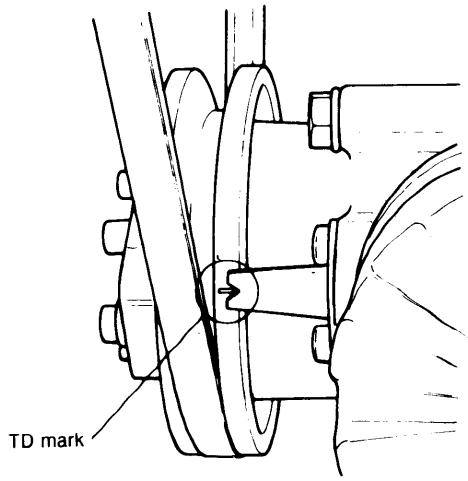

NOTE: Set to the position at which the valve rocker arm shaft does not move even when the crankshaft is turned to the left and right, centered around the TD mark.

(3) Check and adjust the intake and exhaust valve head clearances of the No. 1 piston.
Loosen the valve clearance adjusting screw lock nut, adjust the clearance to the maintenance standard with a feeler gauge, and retighten the lock nut.

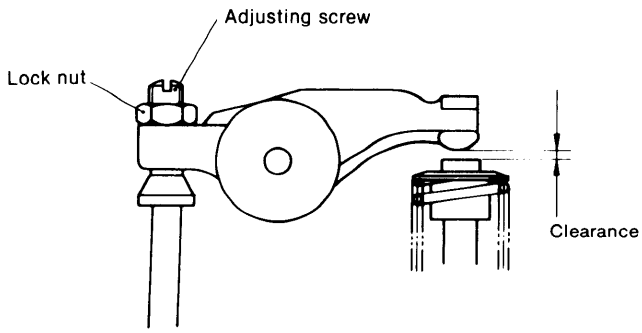

mm (in.)

Intake and exhaust valve head clearance:	0.15 (0.0059)

In the case of 2QM20(H), adjust the valve head clearance of the No. 2 cylinder in the same manner after turn the crankshaft 180°.
In the case of 3QM30(H), adjust the valve head clearance of the No. 3 cylinder in the same manner after turn the crankshaft 120° and then adjust it of the No. 2 cylinder after turn the crankshaft more 120°.

NOTE: If you adjust the valve head clearance of the No. 2 cylinder first, turn the crankshaft 540°. Adjust the clearance of the No. 1 cylinder in the same manner.

3-7.2 Adjusting without a feeler gauge

Set the head clearance to zero by tightening the adjusting screw, being careful not to tighten the screw too tight.
Then adjust the valve clearance to the maintenance standard by backing off the adjusting screw by the angle given below.

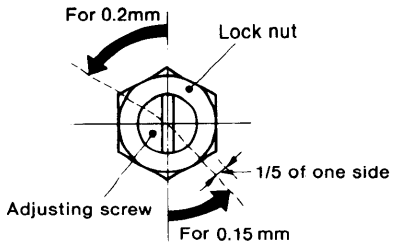

Valve clearance adjusting screw	M8 × 1.25
Adjusting screw backoff angle	Approx 43°

NOTE: Calculating the backoff angle.
calculate the 0.2mm advance angle from 1.25mm advance at one turn = 360°
0.15/1.25 × 360° = 43.2° = 43°
One side (60°) of the hexagonal nut should be used to measure.

3-8 Decompression mechanism

The decompression mechanism is used when the starter motor fails to rotate sufficiently because the battery is weak, and to facilitate starting in cold weather.
When the decompression lever is operated, the valve is pushed down, the engine is decompressed, the engine turns over easily and the flywheel inertia increases, thus making starting easy.

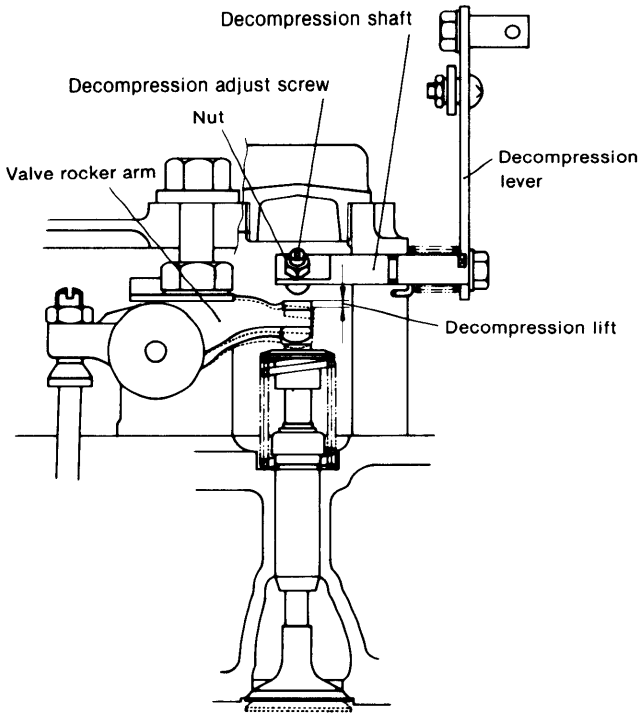

3-8.1 Adjusting the decompression lift

(1) Close the intake and exhaust valves completely. compression T.D.
(2) Remove the covers of the decompression adjustment hole.
(3) Loosen the lock nut, engage the decompression lever and put the decompression adjustment bolt in the 0 mm clearance position. Then screw the decompression bolt in through one turn, and the decompression lift should be 0.8 mm.

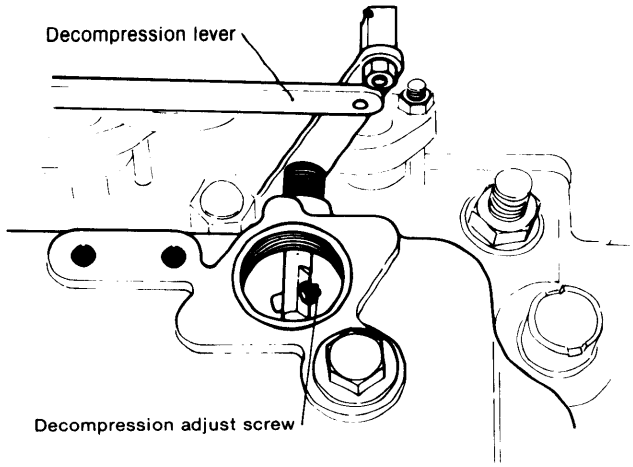

Standard lift	0.8 ±0.2
Adjustment bolt	M = 5, P = 0.77

(4) After adjusting, check for valve and piston contact caused by excessive decompression. Confirm by manually turning the crankshaft and tighten the lock nut to affix it.

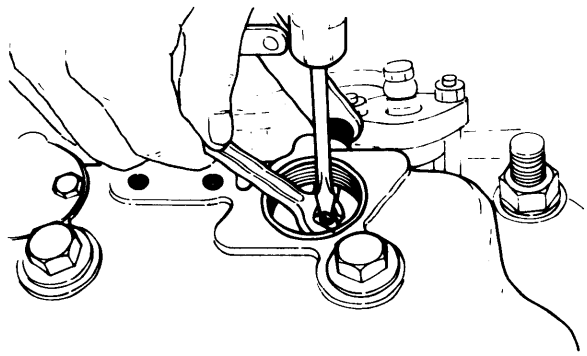

3-9 Disassembling and reassembling the cylinder head

3-9.1 Disassembling the cylinder head

When disassembling the cylinder head, group the parts separately according to cylinder, intake or exhaust to avoid confusion.

(1) Disassembling the rocker arm ass'y
  1) Remove the rocker arm ass'y mounting nuts.
  2) Remove the rocker arm ass'y.
  3) Remove the rocker arm retainer, and pull the rocker arm from the rocker arm support.

(2) Removing the precombustion chamber
1) Remove the rear precombustion chamber and packing.
2) Remove the front precombustion chamber and packing.

(3) Removing the intake and exhaust valve ass'y
1) Set the special tool at the intake and exhaust valve ass'y and depress the valve spring by turning the lever.
2) When the special tool is not available, depress the valve spring with a wrench.

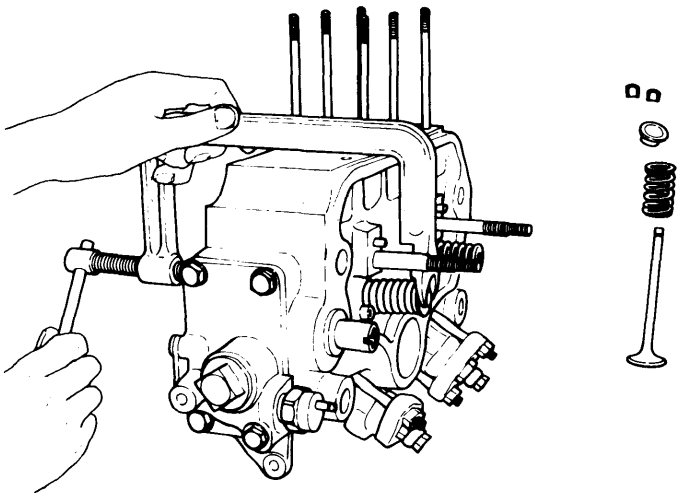

3) Remove the spring cotter pin.
4) Turn the lever of the special tool in the loosening direction, release the valve spring retainer, and remove the valve spring retainer and valve spring.
5) Pull the valve from the cylinder head.
6) Remove the valve stem seal.
7) Remove the valve guide.

3-9.2 Reassembling the cylinder head

Before reassembling the cylinder head, wash all the parts, inspect and measure the dimensions of each part, and repair or replace any parts that are abnormal. Be careful not to confuse the parts grouped by cylinder number and intake or exhaust.

(1) Assembling the intake and exhaust valves
1) Press the valve guide into the cylinder head.
2) Install the valve stem seal. (Always replace the valve stem seal with a new seal.)
3) Install the valve in the cylinder head.
4) Install the valve spring and valve spring seat.
5) Install the split collar.
- Using the special tool
- Using a wrench

(2) Installing the valve arm ass'y
1) Install the intake and exhaust rocker arms on the rocker arm support.
2) Install both the rocker arm supports and rocker arm retainers on the cylinder head, then tighten them with nuts.

(3) Installing the precombustion chamber
1) Install the front precombustion chamber and packing.
2) Install the rear precombustion chamber and packing. (Always replace the insulation packing.)

4. Piston

4-1 Piston ass'y construction

The pistons are made of LO-EX (AC8A-T6) for lightness and are designed for reduced vibration. The outside of the piston is machined to a special oval shape. During operation, thermal expansion is small, the optimum clearance between the piston and cylinder liner is maintained, and a stable supply of lubricating oil is assured.

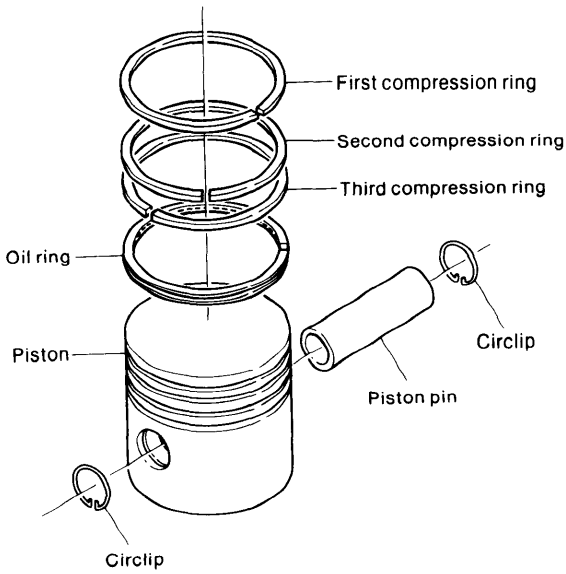

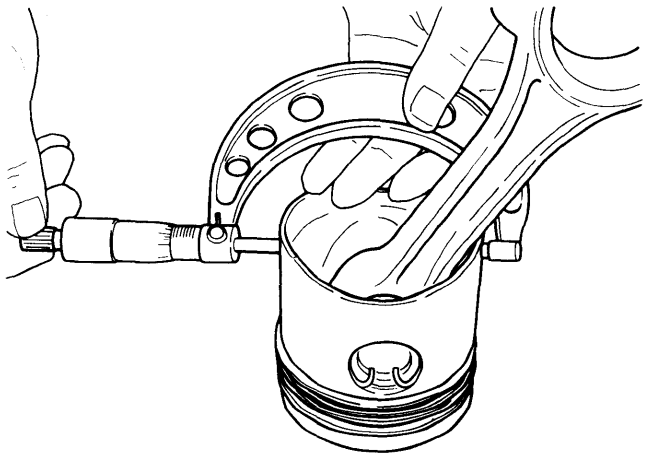

Measuring piston outside diameter

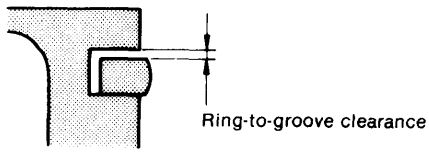

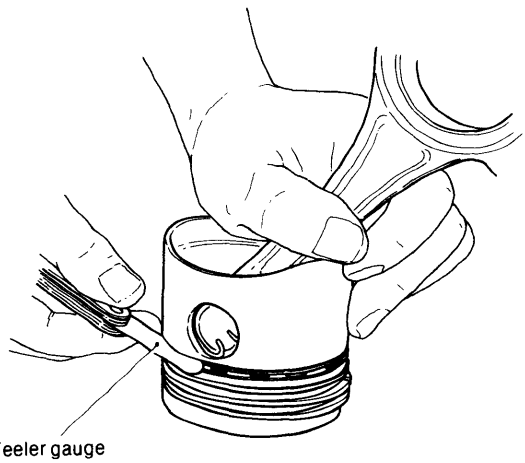

4-2 Piston

4-2.1 Inspection

(1) Measuring important dimensions
Measure each important dimension, and replace the piston when the wear limit is exceeded.

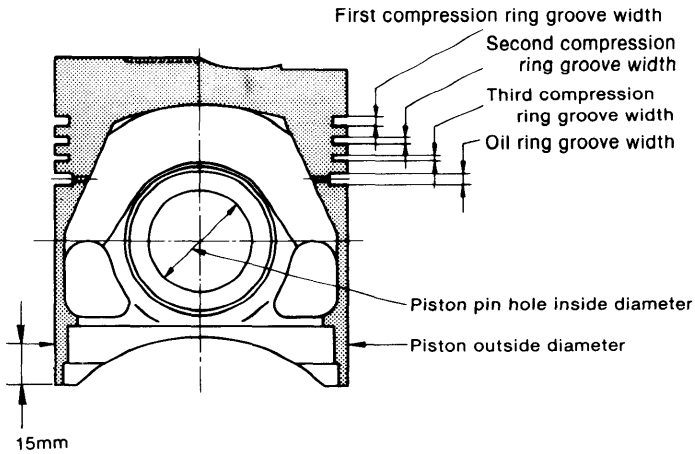

mm (in.)

	Maintenance standard	Wear limit
Piston outside diamter (axial direction)	ø88(3.4646)	ø87.8(3.4567)
Piston pin hole inside diameter	ø30(1.1811)	ø30.1(1.1850)
First compression piston ring-to-groove clearance	0.080 ~ 0.115 (0.0031 ~ 0.0045)	0.3 (0.0118)
Second and third compression piston ring-to-groove clearance	0.035 ~ 0.070 (0.0014 ~ 0.0028)	0.25 (0.0098)
Oil ring-to-groove clearance	0.020 ~ 0.055 (0.00078 ~ 0.00216)	0.25 (0.0098)

(2) Piston pin outside contact and ring groove carbon build-up.
Check if the piston ring grooves are clogged with carbon, if the rings move freely, and for abnormal contact around the outside of the piston. Repair or replace the piston if faulty.

4-2.2 Replacing a piston

If the dimension of any part is worn past the wear limit or the oustside of the piston is scored, replace the piston.
The piston is coupled to the connecting rod through the piston pin. Normally, the piston pin hole has some tightening margin when cold. In order to ease the operations of pullout and insertion of the piston pin, the piston must be heated.

(1) Pulling of piston pin
1) Remove the two circlips of the piston pin.
2) Warm the piston in an oil bath maintained at about 80°C for approximately 15 minutes.
3) Pull out the piston pin, using the pullout implement for piston pin.

(2) Installing piston pin
1) Install the piston pin circlip at one side only.
2) Immerse the piston in 80°C oil for 10 ∿ 15 minutes.

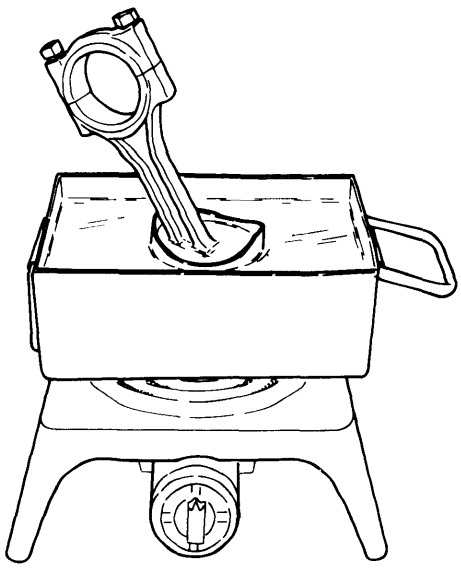

3) Remove the piston from the hot oil and place it on a bench with the piston head at the bottom.
4) Insert the small end of the connecting rod into the piston, insert the piston pin with a rotating motion, and install the other piston pin circlip.
Use wooden hammer if necessary.

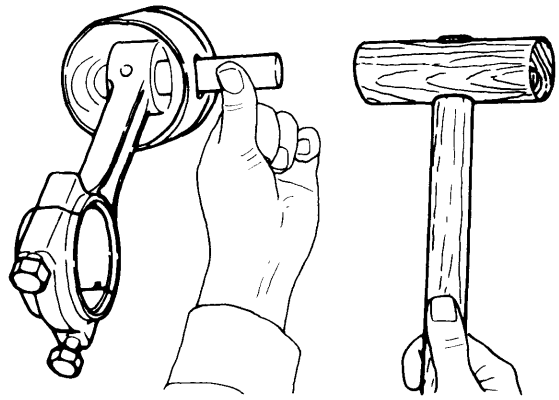

(3) Precautions
1) Before inserting, check whether the piston pin is in the connecting rod.
2) Coat the piston pin with oil to facilitate insertion.
3) Check that the connecting rod and piston move freely.
4) Insert the pin quickly, before the piston cools.

4-3 Piston pin and piston pin bushing

4-3.1 Piston pin

Measure the dimensions of the piston pin, and replace the pin if it is worn past the wear limit or severely scored.

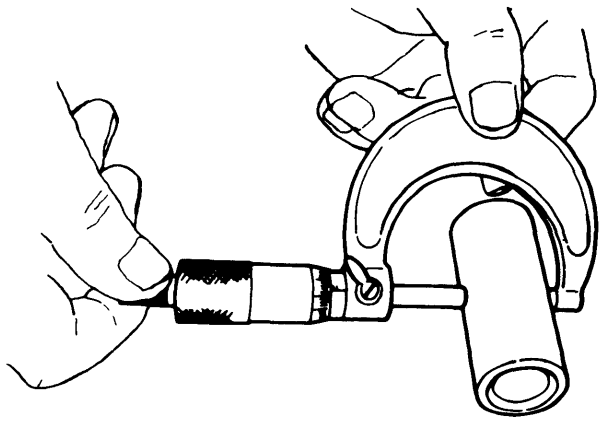

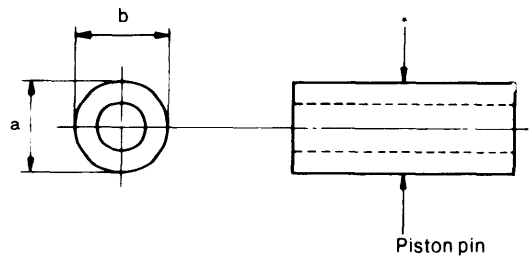

Maximum wear measured in (a) (b) directions at central position marked *

mm (in.)

	Maintenance standard	Wear limit
Piston pin outside diameter	ø30(1.1811)	ø29.95(1.1791)
Piston pin hole and piston pin tightening allowance	−0.05 ∿ 0.019 (−0.0020 ∿ 0.0007)	—

4-3.2 Piston pin bushing

A copper alloy wound bushing is pressed onto the piston pin.
A metallic sound will be produced if the piston pin and piston pin bushing wear is excessive, replace the bushing when the wear limit is exceeded.
The piston pin bushing can be easily removed and installed with a press. However, when installing the bushing, be careful that it is not tilted.

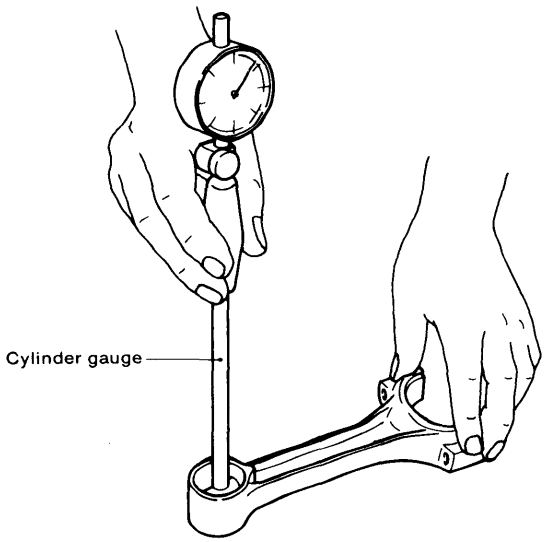

mm (in.)

	Maintenance standard	Wear limit
Piston pin bushing inside diameter	ø30(1.1811)	ø30.1(1.1850)

NOTE: "Piston pin bushing inside diameter" is the dimension after pressing onto the connecting rod.

4-4 Piston rings

4-4.1 Piston ring configuration

(1) The first compression ring is a barrel face ring that effectively prevents abnormal wear caused by engine loading and combustion gas blowby at initial run-in.

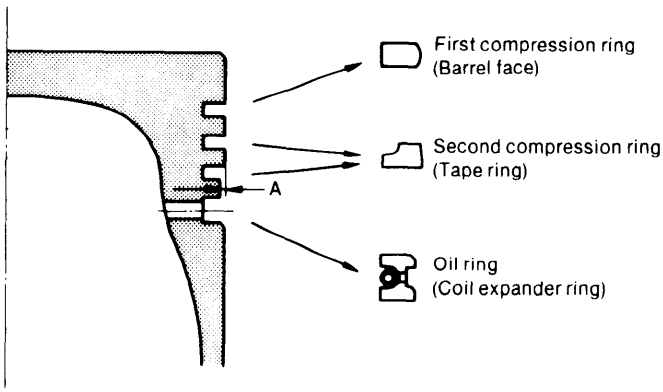

(2) The second and the third compression ring is a taper ring having a sliding face taper of 30' ~ 1°30'. Since the cylinder liner is straight, and the contact area at initial operation is small, it is easily seated to the cylinder liner. Moreover, the bottom of the sliding face is sharp, and oil splash is excellent and air-tightness is superb.
The land (A in figure) between the third compression ring and the oil ring has a small 0.5mm outside diameter that effectively improves oil collection and reduces oil consumption.

(3) The oil ring is a chrome-plated coil expander having a small contacting face, and exerts high pressure against the cylinder liner wall. Oil splash at the bottom of the sliding face is excellent, and its oil control is high.

4-4.2 Inspection

(1) Piston ring contact
Inspect the piston ring contact, and replace the ring when contact is faulty. Since the oil ring side contact is closely related to oil consumption, it must be checked with particular care.

(2) Measuring the piston ring gap
Insert the piston into the cylinder liner by pushing the piston ring at the head of the piston as shown in the figure, and measure the piston ring gap with a feeler gauge. Measure the gap at a point about 150mm from the top of the cylinder liner.

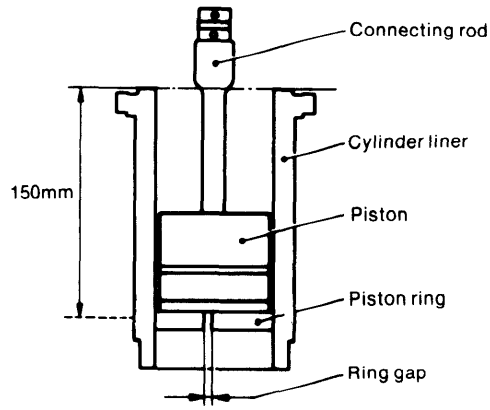

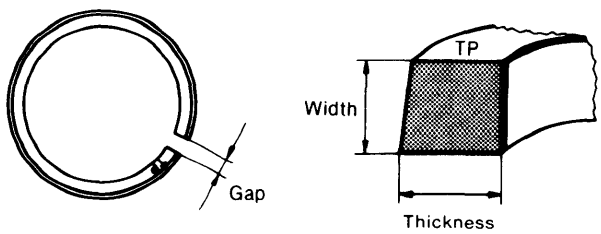

mm (in.)

	Maintenance standard	Wear limit
Piston ring gap (1, 2, 3)	0.3 ~ 0.5 (0.0118 ~ 0.0197)	1.5 (0.059)
Oil ring gap	0.3 ~ 0.5 (0.0118) ~ 0.0197)	1.5 (0.059)

(3) Piston ring replacement precautions

1) Clean the ring grooves carefully when replacing the rings.
2) When installing the rings, assemble the rings so that the manufacturer's mark near the gap is facing the top of the piston.

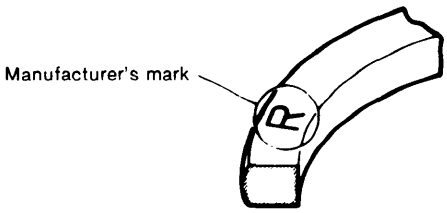

3) After assembly, check that the rings move freely in the grooves.
4) The rings must be installed so that the gaps are 180° apart. At this time, be careful that the ring gap is not lined up with the piston side pressure part.

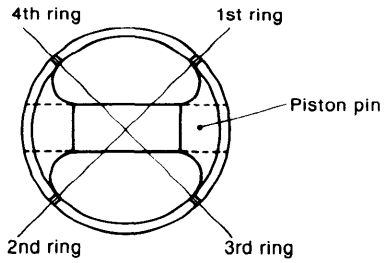

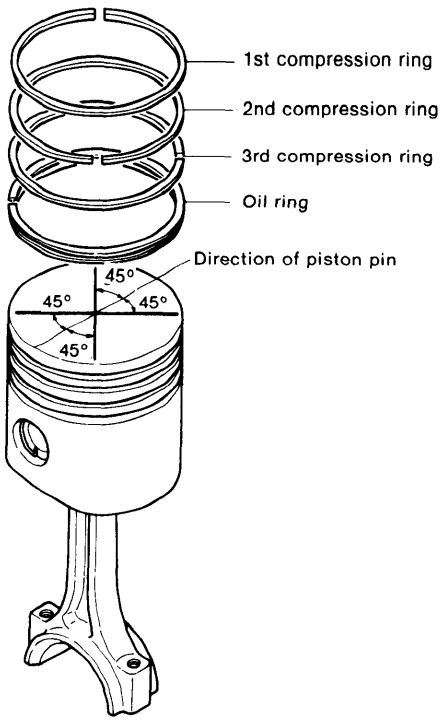

5. Connecting Rod

5-1 Connecting rod ass'y construction

The connecting rod connects the piston pin and crank pin and transmits the explosive force of the piston to the crankshaft. It is a stamp forging designed for extreme lightness and ample strength against bending. A kelmet bushing split at right angles is installed at the large end of the rod, and a round copper alloy is pressed onto the small end.

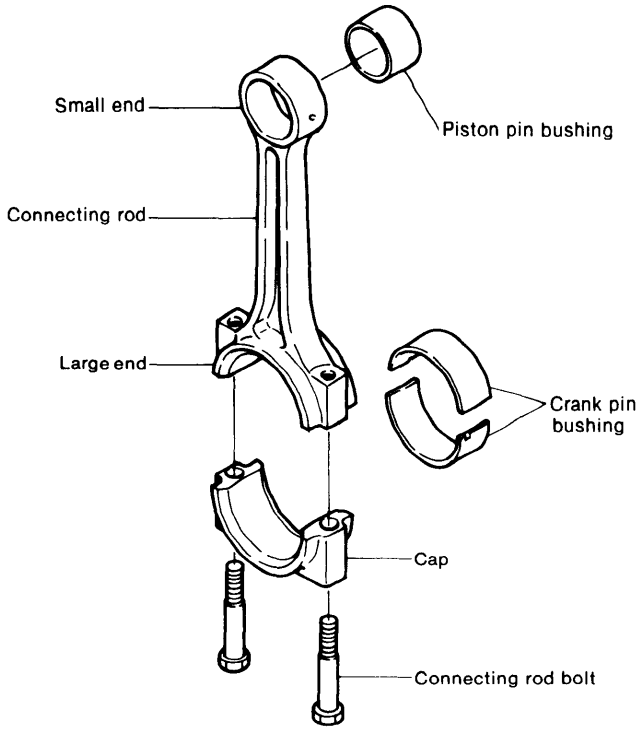

5-2 Inspection

5-2.1 Large and small end twist and parallelism

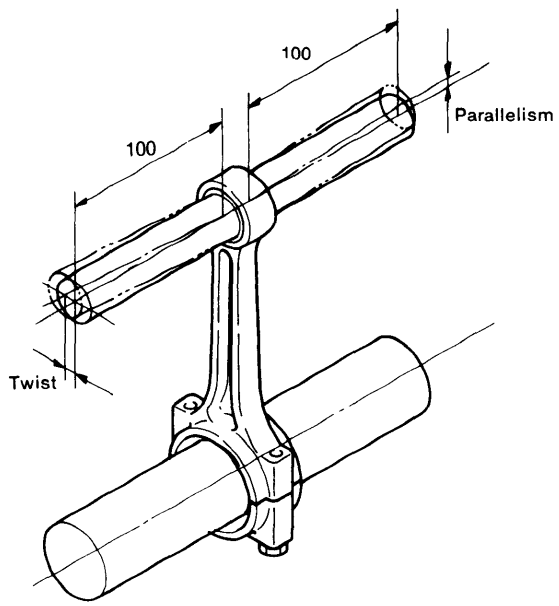

Pass a test bar through the large end and small end holes of the connecting rod, place the bars on a V-block on a stool and center the large end test bar. Then set the sensor of a dial indicator against the small end test bar and measure twist and parallelism. When the measured value exceeds the wear limit, replace the connecting rod. Twisting and poor parallelism will cause uneven contact of the piston and bushing and shifting of the piston rings, resulting in compression leakage.

Connecting rod twist and parallelism

mm (in.)

Maintenance standard	0.03/100 or less (0.00118/3.937)
Wear limit	0.08/100 (0.00315/3.937)

5-3 Crank pin bushing

Since the crank pin bushing slides while receiving the load from the piston, an easy-to-replace kelmet bushing with a wear-resistant overlay is used.

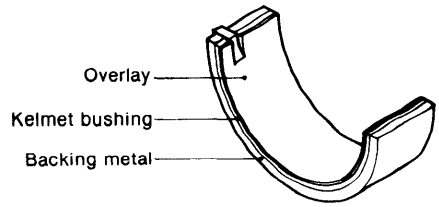

5-3.1 Crank pin bushing inside diameter

Tighten the large end of the connecting rod to the prescribed torque with the connecting rod bolts, and measure the inside diameter of the crank pin bushing. Replace the bushing if the inside diameter exceeds the wear limit or the clearance at the crank pin part exceeds the wear limit.

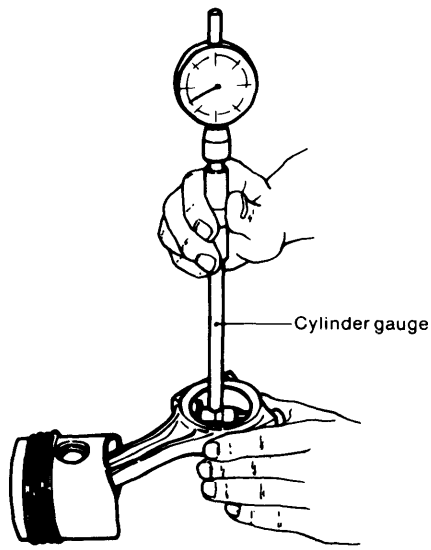

mm (in.)

	Maintenance standard	Wear limit
Crank pin bushing inside diameter	ø54(2.1260)	ø54.1(2.1299)
Crank pin and bushing oil clearance	0.036 ~ 0.095 (0.0014 ~ 0.0037)	0.15 (0.0059)
Connecting rod bolt tightening torque	6.50 kg-m (47.07 ft-lb)	

NOTE: The crank pin bushing inside diameter must always be measured with the connecting rod bolts tightened to the prescribed torque.

5-3.2 Crank pin and bushing clearance (oil clearance)

Since the oil clearance affects both the durability of the bushing and lubricating oil pressure, it must always be the prescribed value. Replace the bushing when the oil clearance exceeds the wear limit.

(1) Measurement
1) Thoroughly clean the inside surface and crank pin section of the crank pin bushing.
2) Install the connecting rod on the crank pin section of the crankshaft and simultaneously fit a Plasti gauge on the inside surface of the crank pin bearing.

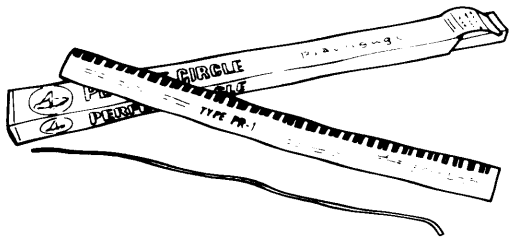

3) Tighten the connecting rod bolt to the prescribed tightening torque.
Connecting rod tightening torque: 6.5 kg-m (47.07 lb-ft)
4) Loosen the connecting rod bolt and slowly remove the connecting rod big end cap, then measure the crushed Plasti gauge with a gauge.

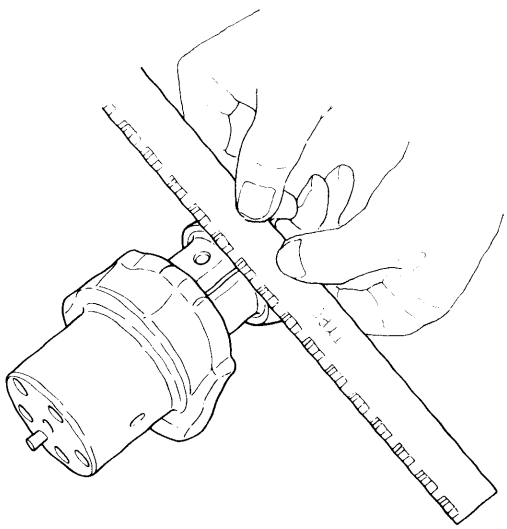

5) The crank pin and bushing clearance (oil clearance) may also be measured with a micrometer, in addition to measurement with a Plasti gauge. With this method, the outside diameter of the crankshaft crank pin section and the inside diameter of the connecting rod's big end bushing, when the connecting rod bolt has been tightened to the prescribed torque, are measured, and the difference between the large end bushing inside diameter and crank pin outside diameter is set as the oil clearance.

(2) Measurement precautions
1) Be careful that the Plasti gauge does not enter the crank pin oil hole.
2) Be sure that the crankshaft does not turn when tightening the connecting rod bolt.

5-3.3 Crank pin bushing replacement precautions

(1) Thoroughly clean the crank pin bushing and the rear of the crank pin bushing.
(2) Also clean the big end cap, and install the crank pin bushing and check if the bushing contacts the big end cap snugly.
(3) When assembling the connecting rod, match the number of the big end section and the big end cap, coat the bolts with engine oil, and alternately tighten the bolts gradually to the prescribed tightening torque. If a torque wrench is not available, put matching marks (torque indication lines) on the bolt head and big end cap before disassembly and tighten the bolts until these two lines are aligned.

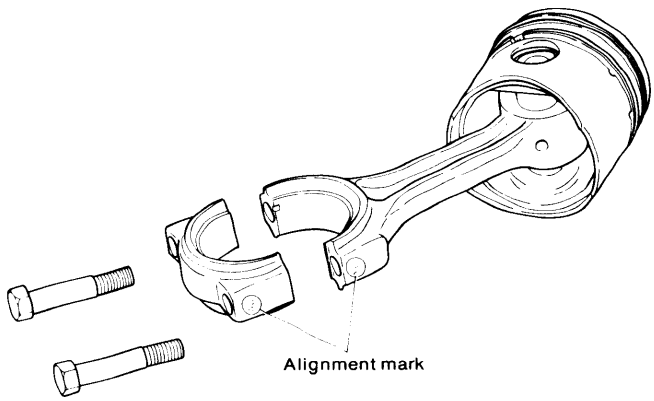

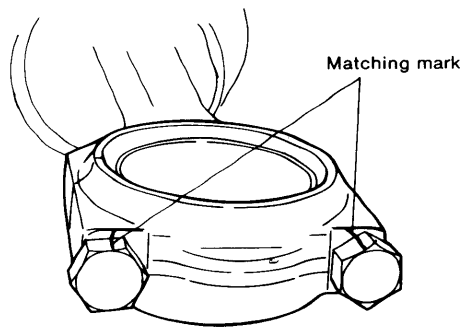

(4) Check that there is no sand or metal particles in the lubricating oil and that the crankshaft is not pitted. Clean the oil holes with particular care.

5-4 Tightening the connecting rod bolts

When tightening the connecting rod bolts, coat the threads of the bolts with engine oil.
Tighten the two bolts alternately and gradually to the prescribed tightening torque. If a torque wrench is not available, make matching marks (torque indication lines) on the head of the bolt and the big end cap and tighten the bolts until these two marks are aligned.
Connecting rod tightening torque: 6.5 kg-m (47.07 lb-ft)

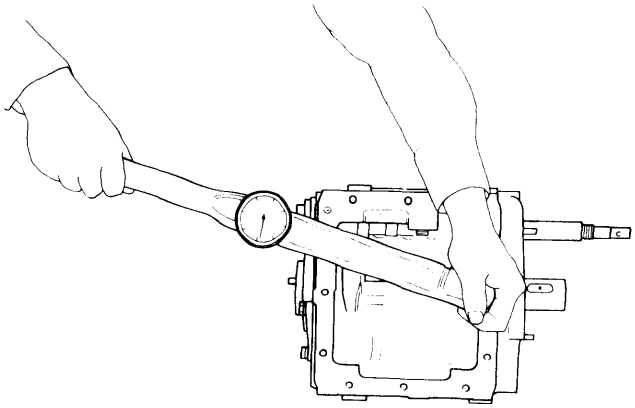

5-5 Connecting rod side clearance

After installing the connecting rod on the crankshaft, push the rod to one side and measure the side clearance by inserting a feeler gauge into the gap produced at the other side.
The connecting rod bolts must also be tightened to the prescribed tightening torque in this case.

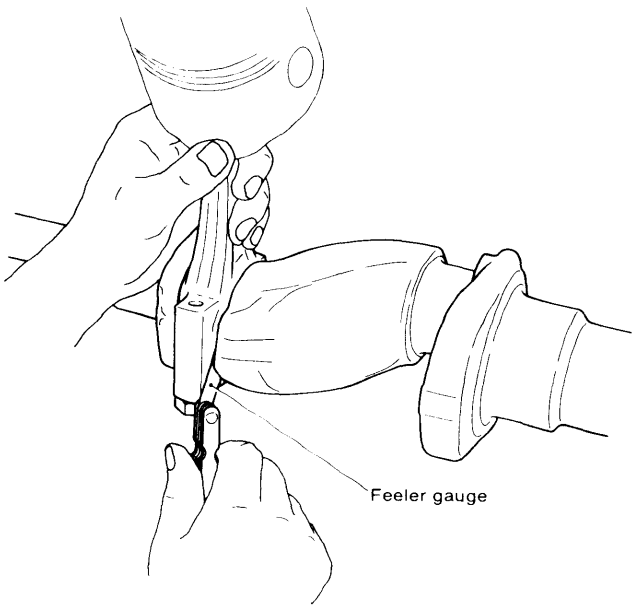

mm (in.)

	Maintenance standard	Wear limit
Connecting rod side clearance	0.15 ~ 0.35 (0.0059 ~ 0.0138)	0.5 (0.0197)

5-6 Piston bushing and piston pin

The piston bushing is a round copper alloy bushing driven onto the small end of the connecting rod. During use, the piston pin bushing and piston pin will wear. If this wear becomes excessive, a metallic sound will be produced and the engine will become noisy.

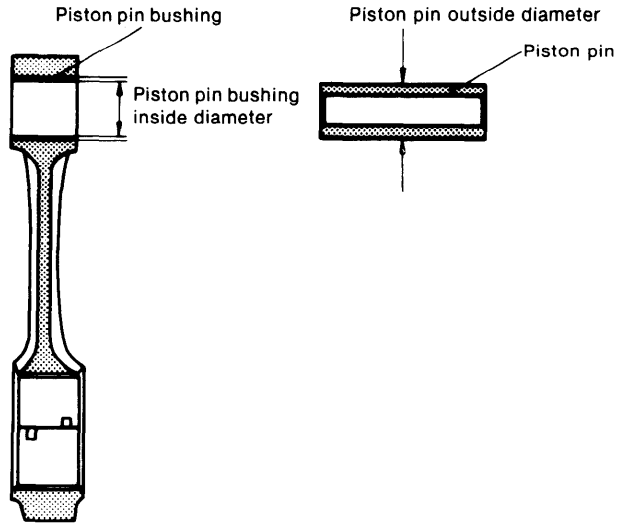

mm (in.)

	Maintenance standard	Wear limit
Piston pin outside diameter	ø30(1.1811)	ø29.95(1.1791)
Piston pin bushing inside diameter	ø30(1.1811)	ø30.1(1.1850)
Piston pin and bushing clearance	0.025 ~ 0.049 (0.00098 ~ 0.0019)	0.15 (0.0059)

NOTE: The piston pin bushing can be easily removed and installed with a press. However, be careful that throttling is not produced by tilting the bushing during installation.

6. Crankshaft

6-1 Crankshaft ass'y and bearing construction

The crankshaft is stamp-forged, and the crank pin and journal sections are high-frequency induction hardened; and ground and polished to a high precision finish. Therefore, tne contact surface with the bushing is excellent and durability is superb.
The crankshaft is a balance weight integral type. Engine unblalance, which causes vibration, has been minimized by balancing the V-pulley, flywheel, and crankshaft.
In 2QM20(H) model, engine length has been reduced and serviceablity improved by eliminating the intermediate bearing between the two cylinders and adopting a metal housing type flywheel bearing.

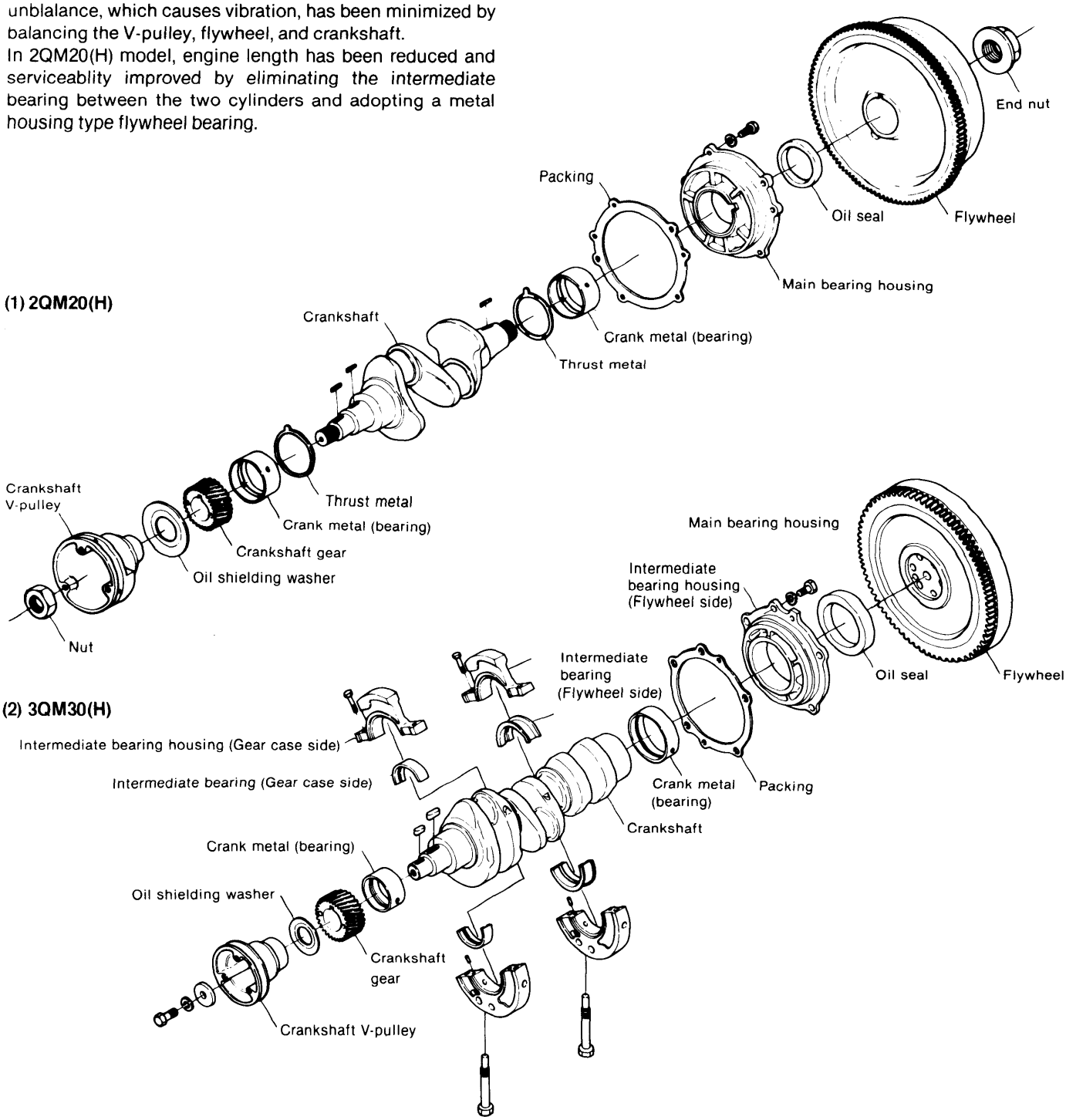

6-2 Inspection

6-2.1 Crank journal and crank pin

(1) Cracking
If cracking of the crank journal or crank pin is suspected, thoroughly clean the crankshaft and perform a color check on the shaft, or run a candle flame over the crankshaft and look for oil seepage from cracks. If any cracks are detected, replace the crankshaft.

(2) Crank pin and crank journal outside diameter measurement.
When the difference between the maximum wear and minimum wear of each bearing section exceeds the wear limit, replace the crankshaft. Also check each bearing section for scoring. If the scoring is light, repair it with emery cloth.

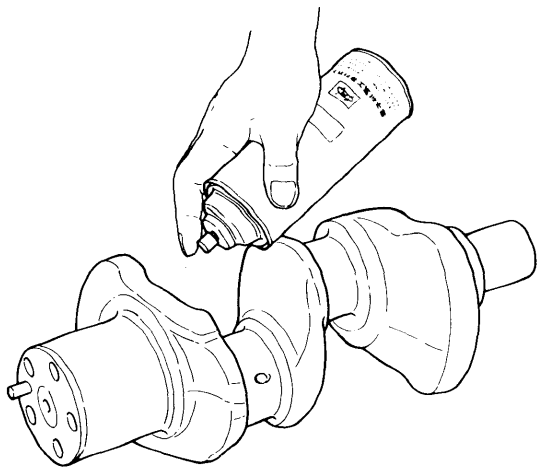

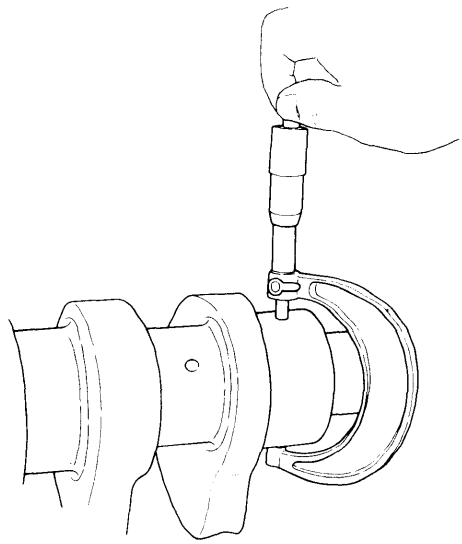

mm (in.)

			Maintenance standard	Wear limit
Crank journal outside diameter A-A'	Gear case side		ø70 (2.7559)	ø69.9 (2.7520)
	Flywheel side	2QM20(H)	ø70 (2.7559)	ø69.9 (2.7520)
		3QM30(H)	ø90 (3.5433)	
Crank pin outside diameter B-B			ø54 (2.1260)	ø53.91 (2.1224)
Crank journal/pin eccentric wear			—	0.01 (0.0004)
Crank journal and bushing oil clearance	Gear case side		0.036 ~ 0.099 (0.0014 ~ 0.0039)	0.15 (0.0059)
	Intermediate bearing [3QM30(H)]		0.036 ~ 0.095 (0.0014 ~ 0.0037)	0.15 (0.0059)
	Flywheel side		0.066 ~ 0.132 (0.0026 ~ 0.0052)	0.20 (0.0079)
Crank pin and crank pin bearing oil clearance			0.036 ~ 0.095 (0.0014 ~ 0.0037)	0.1 (0.0039)

2QM20(H)

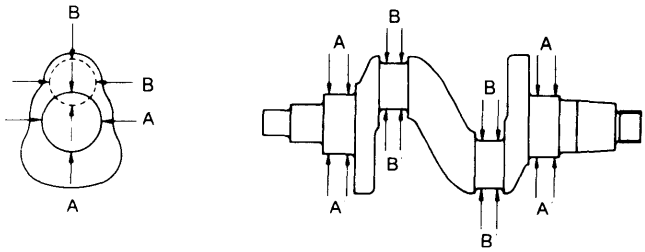

3QM30(H)

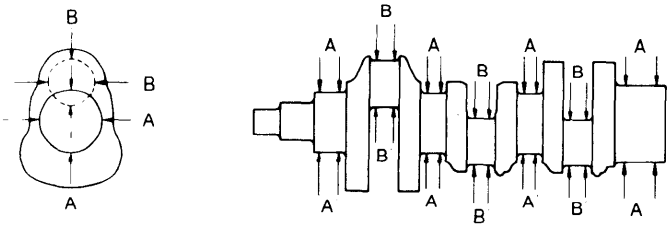

(3) Measuring the crankshaft bend (3QM30)
Measure on a surface plate. Place the journal parts of both ends of the crankshaft on a V block and measure with a dial gauge while moving the crankshaft in an axial direction. If the deflection of the middle of the crankshaft exceeds the limit, replace the crankshaft.

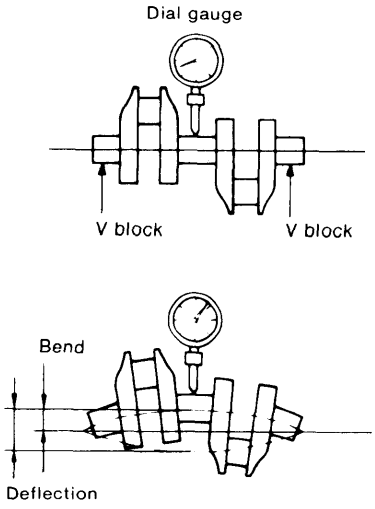

mm (in.)

	Maintenance standard	Wear limit
Crankshaft bend	Less than 0.015 (0.0006)	0.15 (0.006)

6-3 Crankshaft side gap

6-3.1 Side gap

The clearance in the axial direction after the crankshaft has been assembled is called the side gap.
If the side gap is too large, contact with pistons will be uneven, the clutch disengagement position will change, and other troubles will occur. If it is too small, the crankshaft sliding resistance will increase and cranking will become stiff.

2QM20H

Adjust the side gap to the maintenance standard by the thickness of the crankshaft thrust metal and the thickness of the main bearing shell paper packing.
The main bearing shell packing thicknesses are 0.1mm (0.00394in.) and 0.2mm (0.00788in.).

3QM30H

The side gap of the 3QM30(H) is the difference between the width of the main journal bearing and width of the journal.

6-3.2 Measuring side gap

Set a dial indicator against the end of the crankshaft (or end of the flywheel) and measure the amount of movement of the crankshaft in the axial direction.
In the 2QM20(H), if the measured value exceeds the wear limit, replace the crankshaft thrust washer. Main bearing housing packing of the prescribed thickness must be used.
In the 3QM30(H), instead of measuring the side gap with a dial gauge it can also be measured by inserting a thickness gauge between the standard crank journal bearing and crankshaft.
If the measured value exceeds the wear limit, replace the standard crank journal bearing.

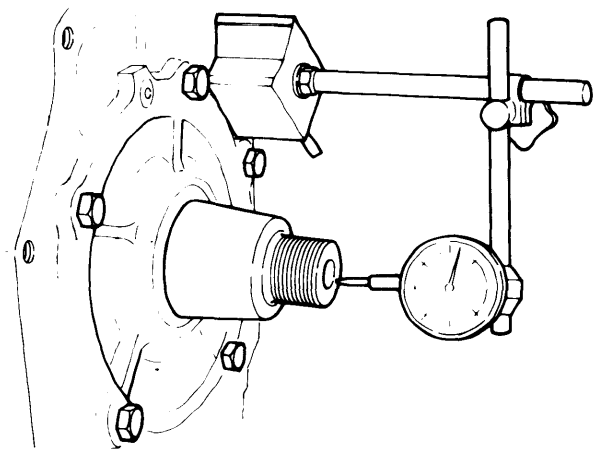

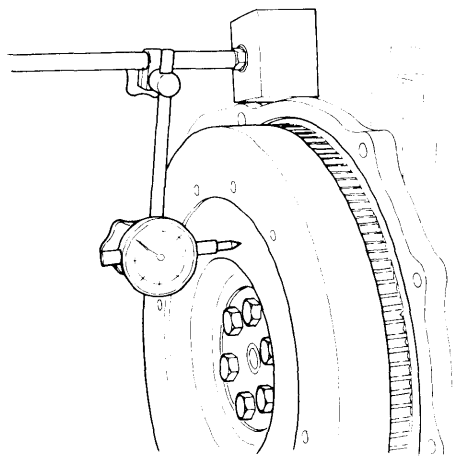

6-3.3 Side gap maintenance standard and wear limit

mm (in.)

	2QM20(H)		3QM30(H)	
	Maintenance standard	Wear limit	Maintenance standard	Wear limit
Crankshaft side gap	0.10 ~ 0.20 (0.0039 ~ 0.0079)	0.40 (0.0157)	0.09 ~ 0.19 (0.0035 ~ 0.0075)	0.33 (0.0130)

6-4 Disassembly of the crankshaft (for the 3QM30)

For the 2QM20 see the chapter on disassembly and reassembly. Because there are points over which care must be taken in the 3QM30, disassembly and reassembly procedures are explained below.

6-4.1 Disassembly

(1) When disassembling, lay the cylinder down with the main bearing housing side on top so that the crankshaft will be vertical for easy operation.
(* Remove the crank gear and flywheel beforehand.)
(2) Remove the main bearing housing.
(3) Attach a rope to the crankshaft, gradually lifting it with chain block etc. and remove the two set bolts of the intermediate main bearing housing. (If the crankshaft is lifted too much or not enough, the set bolts will be difficult to release.)
(4) Lift and remove the crankshaft (with the intermediate main bearing housing).

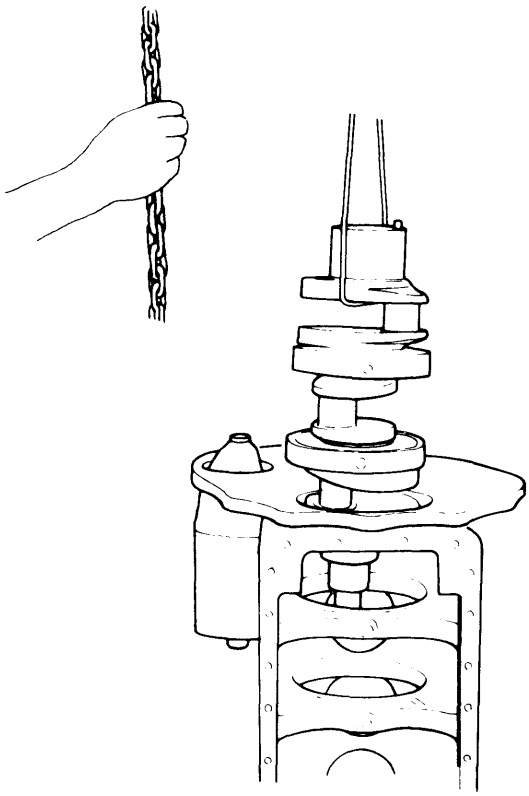

(5) Remove each intermediate main bearing housing from the crankshaft.

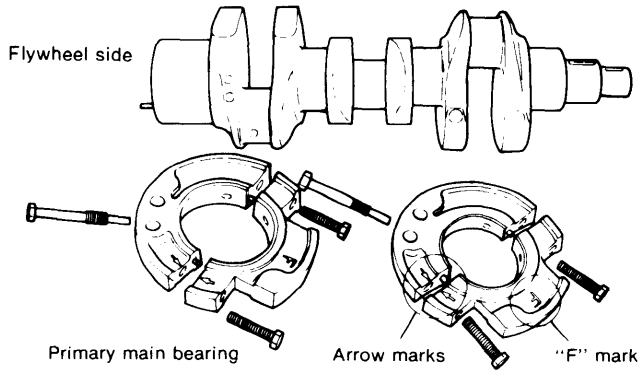

6-4.2 Reassembly

(1) Clean each part before reassembly.
(2) Attach the intermediate main bearing housing to the crankshaft and confirm that the crankshaft rotates smoothly.
1) Assembling position and direction of the intermediate main bearing housing.
- The "F" mark on the intermediate main bearing housing indicates the direction of assembly on the crankshaft flywheel.

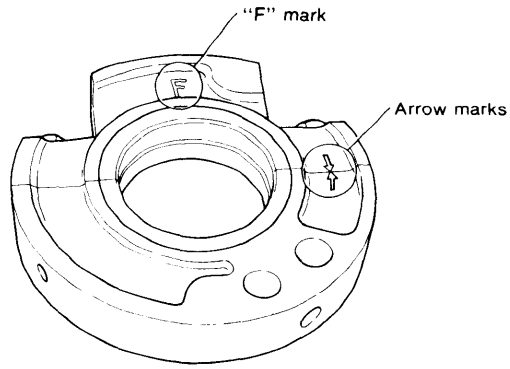

- Align the arrow marks pointing up and down on the side of the intermediate main bearing housing and assemble it so that the "F" mark is in the direction of the flywheel.
- Assemble, integrated with thrust bearing, the intermediate main bearing on the flywheel side (between cylinders No. 1 and 2).

2) Tightening torque of hexagonal bolts for affixing the top and bottom of the intermediate main bearing housing:

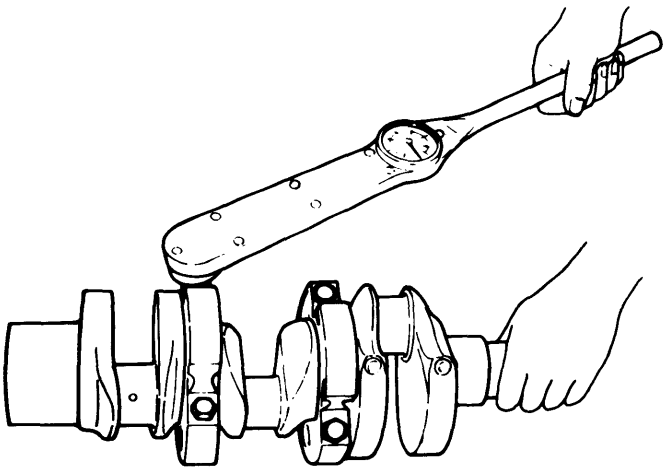

	kg-m
Tightening torque	6.5 ~ 7.0

(3) Set up vertically the cylinder block, suspend the crankshaft and match the positions of the cylinder block oil hole and the intermediate main bearing housing set bolts to the intermediate main bearing housing.

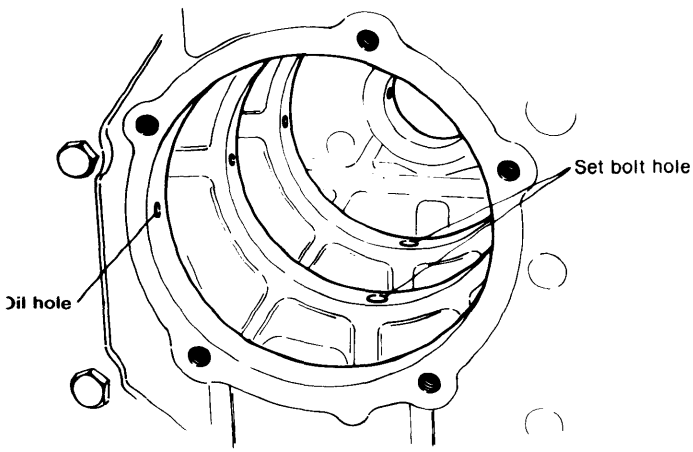

(4) Attaching the intermediate main bearing housing set bolts.

1) First temporarily screw the set bolt in the intermediate main bearing housing on the timing gear housing side and with the prescribed tightening torque, start tightening from the intermediate main bearing housing on the flywheel side. After tightening the bolts confirm that the crankshaft rotates smoothly. (Each set bolt hole can be adjusted vertically.)

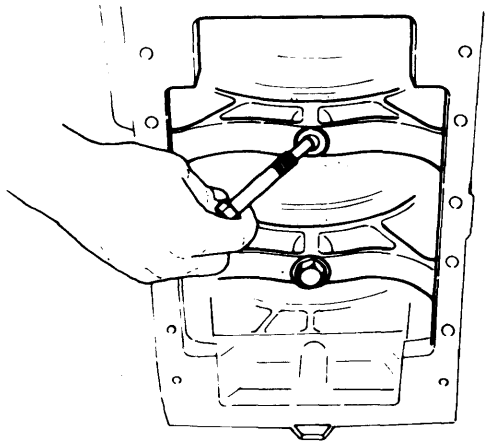

	kg-m
Tightening torque of the set bolt	8.0

(5) Reassembly of the main bearing housing:

1) Enclose a small amount of oil inside the oil seal and assemble after coating the bearing with oil.
2) Be sure to place the "down" mark on the main bearing housing side in the downward direction.

	kg-m
Main bearing housing tightening torque	3.8

6-5 Main bearing

6-5.1 Construction

2QM20(H)

The main bearing consists of a crank bearing and thrust metal. The crank bearing is a round copper-leak sintered alloy bearing featuring superior durability.
The crank bearing and thrust metal are installed on the bearing housing and cylinder block, respectively.

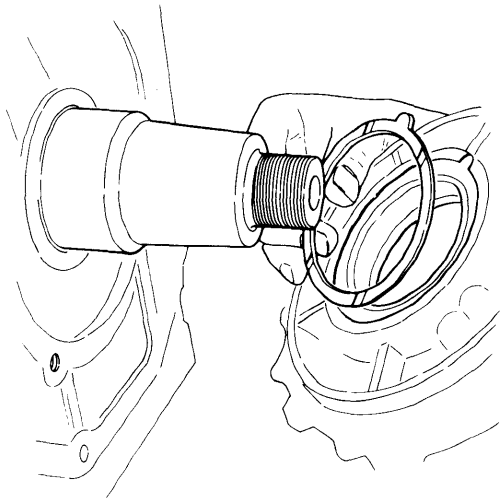

3QM30(H)

For the intermediate main bearing on the flywheel side, a flange type bearing integrated with the thrust bearing is used. Because this is the primary main bearing, those without the thrust bearing on the sides of the flywheel and timing gear housing are whole circle bearings, while the intermediate main bearing on the timing gear housing side is the divided circle type.

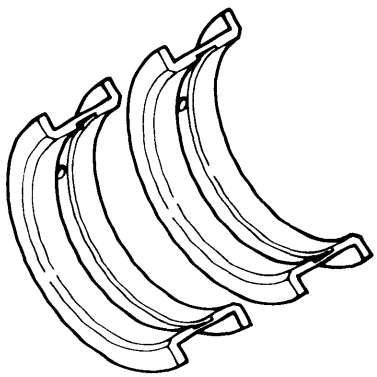

Primary main bearing

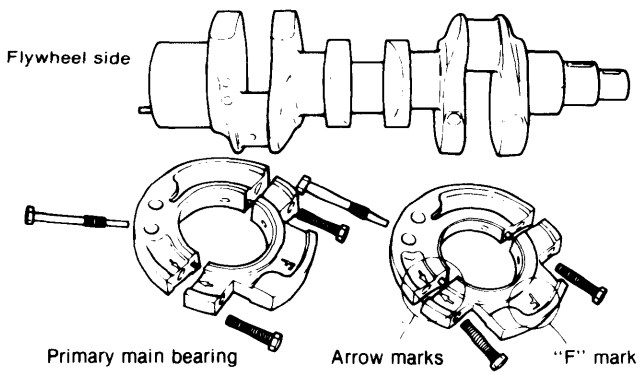

6-5.2 Inspecting the crank bearing

(1) Crank bearing inside diameter
Measure the inside diameter of the crank bearing and replace the bearing when wear exceeds the wear limit. Crank bearing replacement is described in 6-5.5.

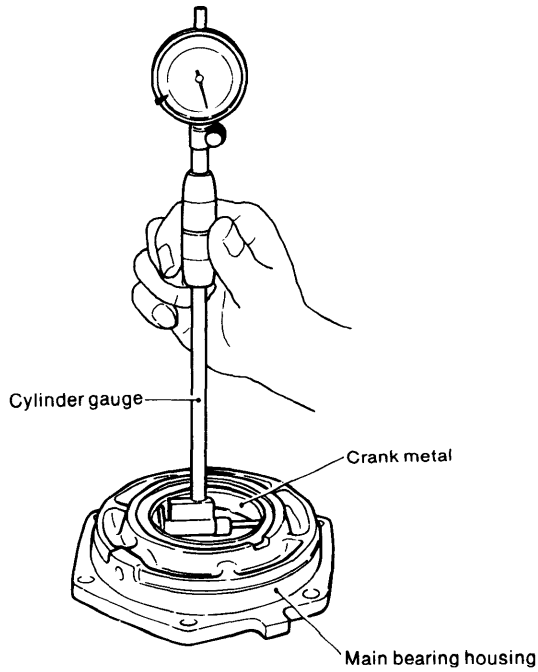

NOTES: 1) Measure the crank bearing at the four points shown in the figure and replace the bearing if the wear limit is exceeded at any of these points.
2) When measuring the inner diameter of the crank bearing, the crank bearing should be installed on the bearing housing and/or cylinder block.

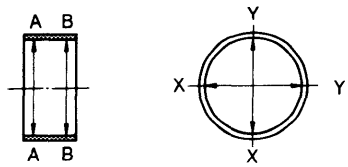

mm (in.)

	2QM20(H)		3QM30(H)	
	Maintenance standard	Wear limit	Maintenance standard	Wear Limit
Flywheel side crank bearing inside diameter	ø70 $^{+0.049}_{0}$ (2.7559 ~ 2.7578)	+0.1 (0.0039)	ø90 (3.5433)	+0.1 (0.0039)
Gear side crank bearing inside diameter	ø70 $^{+0.049}_{0}$ (2.7559 ~ 2.7578)	+0.1 (0.0039)	ø70 $^{+0.049}_{0}$ (2.7559 ~ 2.7578)	+0.1 (0.0039)

(2) Crank bearing contact and scoring
Inspect the crank bearing for contact scoring, and replace the bearing if uneven contact is severe or the bearing is heavily scored. Check all the parts which may be the cause of uneven contact and take suitable corrective action.

6-5.3 Inspecting the thrust metal (for the 2QM20(H) only)

Measure the thickness of the thrust metal and replace the metal when wear exceeds the wear limit.

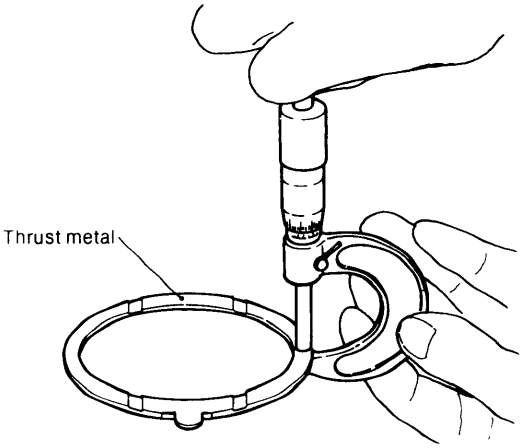

mm (in.)

	Maintenance standard	Wear limit
Thrust metal thickness	$2.95^{+0}_{-0.05}$ (0.1161 ~ 0.1142)	2.75 (0.1082)

6-5.4 Inspecting the intermediate main bearing (for the 3QM30(H) only)

(1) Caution when inspecting
The intermediate main bearing is divided into two semi-circles. Therefore, always measure after tightening the intermediate main bearing with the standard tightening torque. Measure at four places as in the main bearing, and replace it if it exceeds the wear limit.

kg·m

Tightening torque of the intermediate main bearing housing tightening bolt	6.5 ~ 7.0

(2) Intermediate main bearing
The intermediate main bearing on the flywheel side is the primary main bearing. Because this is a flange type bearing, measure the flange width as well as the inside diameter. When the flange wears away the side gap of the crankshaft increases.

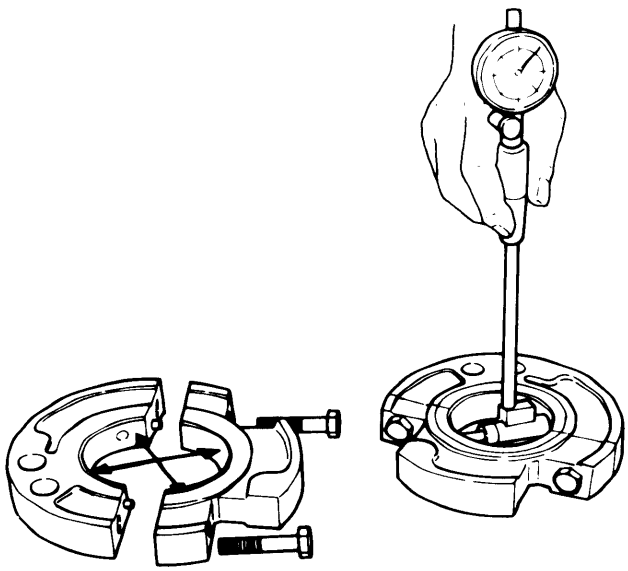

Width of intermediate bearing

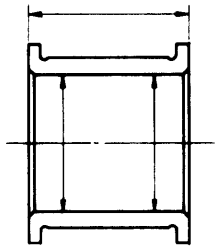

mm (in.)

	Maintenance standard	Wear limit
Gear case side intermediate bearing inside diameter	ø70(2.7559)	+0.1(0.0039)
Flywheel side intermediate bearing inside diameter	ø70(2.7559)	+0.1(0.0039)
Width of intermediate bearing (Flywheel side)	30(1.1811)	+0.3(0.0118)

6-5.5 Replacing the crank bearing

Since the crank bearings at both ends of the crankshaft are attached to the cylinder block and bearing housing with a press, a force of approximately 1.0 ~ 1.5 tons (2200 ~ 3300 lbs) is required to remove them.
Moreover, since the crankshaft will not rotate smoothly and other trouble may occur if the bearing is distorted, it must always be installed with the special tool.

(1) Removal
Assemble the spacer and plate A as shown in the figure, place the puller/extractor against the bearing from the opposite end and pull the bearing by tightening the nut of the special tool. Remove the oil seal before pulling the bearing pressed to the bearing housing.

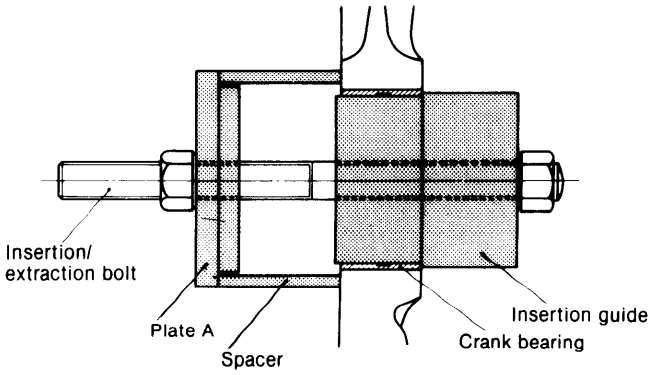

(2) Installation
Coat the outside of the bearing with oil and align the positions of the bearing oil holes. Then press in plate B until it touches the cylinder block or bearing housing, using the puller/extractor as a guide, as shown in the figure
After inserting the bearing, measure its outside diameter. If the bearing is distorted, remove it again and replace it with a new bearing.

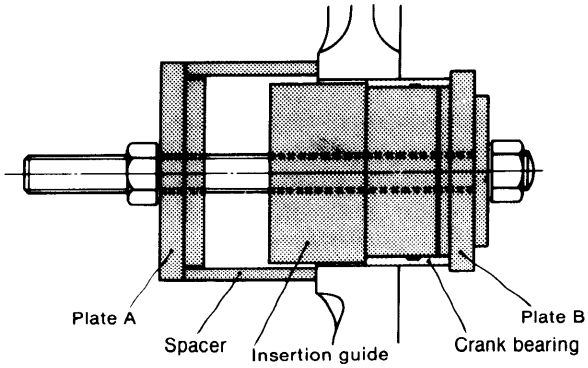

(3) Crank bearing installation precautions
1) Pay careful attention to the crank bearing insertion direction. Insert the bearing so that the side with the outside fillet is on the outside.
2) Align the oil hole of the crank bearing with the oil holes of the cylinder block and bearing housing.
3) After inserting the crank bearing, check that the crankshaft rotates easily with the thrust metal and bearing housing installed.
4) Be careful that the bearing is not tilted during insertion.

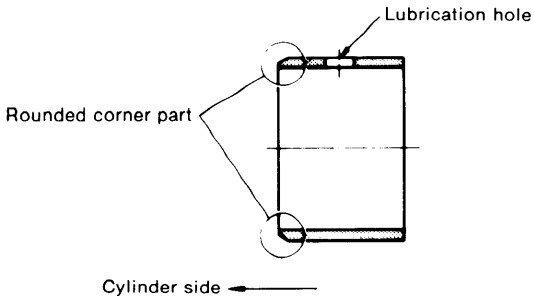

6-6 Crankshaft oil seal

6-6.1 Oil seal type and size

Spiral oil seals are employed at both ends of the crankshaft. This type of oil seal is pulled toward the oil pan by pump action while the engine is running so that there is no oil leakage.
Since the viscous pump action will be lost if the lip of the seal is coated with grease, coat the lip with oil when assembling.

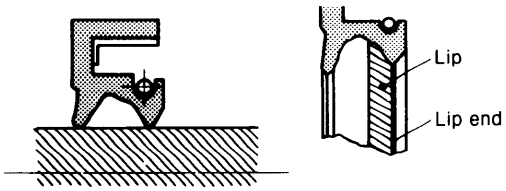

mm (in.)

		Size	Spiral	Part No. (Yanmar)
Gear side		58-80-12	YES	124450-01800
Flywheel side (Bearing housing side)	2QM20(H)	65-88-9	YES	124450-02220
	3QM30(H)	90-115-13	YES	121250-02220

6-6.2 Oil seal insertion precautions

(1) Clean the inside of the housing hole, ascertaining that the hole was not dented when the seal was removed.
(2) Be sure that the insertion direction of the oil seal is correct. Insert so that the main lip mounting the spring is on the inside (oil side).

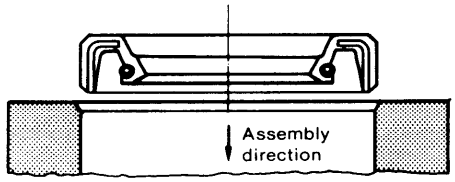

(3) Since the direction of rotation of the shaft is specified on a spiral oil seal, be sure that the rotating direction is correct.

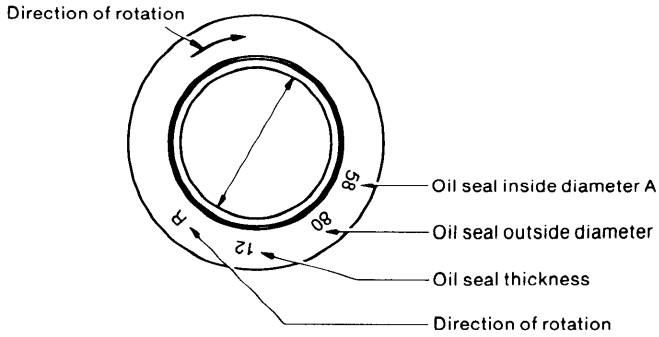

(4) Insert the oil seal with a press. However, when unavoidable, the seal may be installed by tapping the entire periphery of the seal with a hammer, using a block. In this case, be careful that the oil seal is not tilted.
Never tap the oil seal directly.

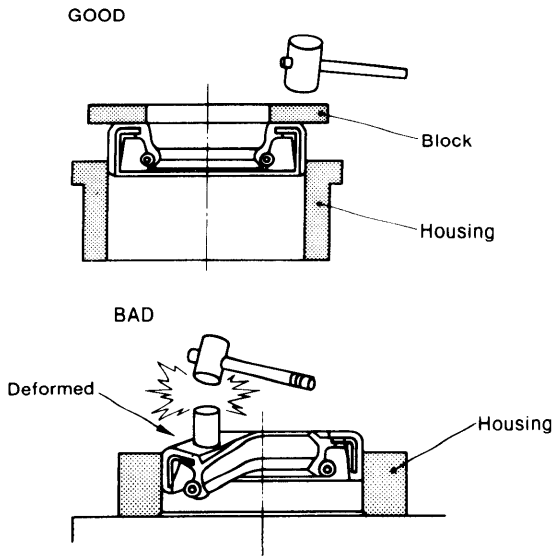

7. Camshaft

7-1 Construction of the camshaft

The camshaft, an integral camshaft with intake and exhaust cams, is driven by the camshaft gear and may timed individually.
On top of the intake and exhaust cams a tappet is mounted guided by the cylinder block. The tappet moves up and down with the rotation of the cam and opens and closes the intake and exhaust valves with the pushrod and rocker arm.
During high speed operation the cam surface is exposed to a strong force of inertia from moving valves and spring load, and comes in to contact with the tappet at high surface pressure. Therefore, to reduce wear the surface is tempered by high frequency hardening, as well as a cam form selected to decrease the force of inertia. Since the intake and exhaust cam profile of this engine is a parabolic acceleration cam with a buffering curve, movement of the valve at high speed is smooth, improving the durability of the intake and exhaust valve seats.
Also, the fuel injection pump roller tappet from the cylinder side comes into contact with the fuel cam and moves the fuel injection pump plunger.
In the 2QM20(H), there are fuel cams for two cylinders between the intake and exhaust cams of No. 1 cylinder. In the 3QM30(H), there are fuel cams for three cylinders between the exhaust cam of No. 1 cylinder and the intake cam of No. 2 cylinder, which eliminates the camshaft bearing between cylinders No. 1 and 2.

2QM20(H)

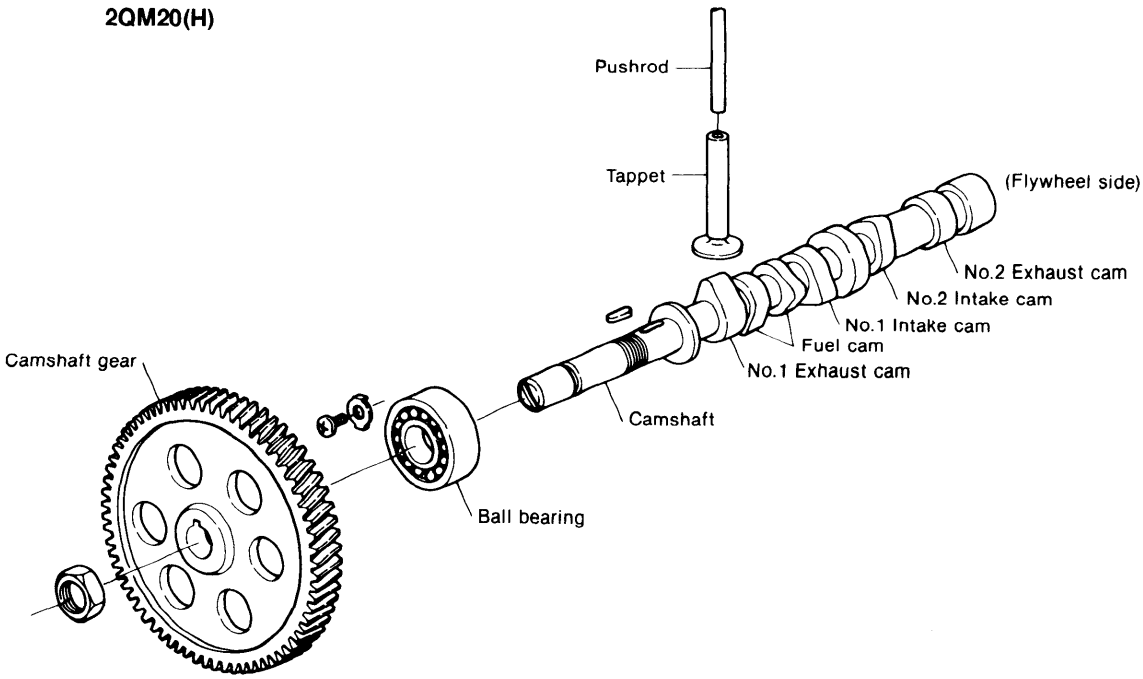

3QM30(H)

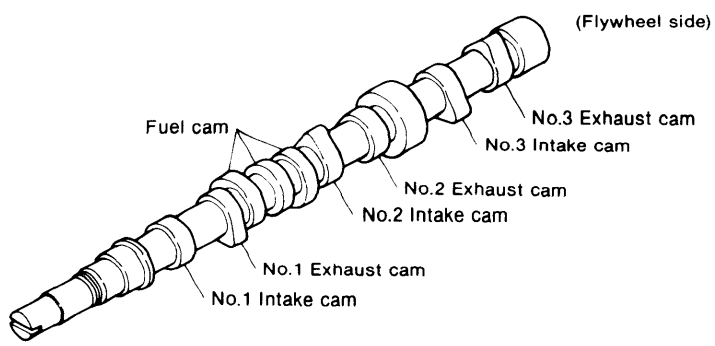

7-2 Valve curve

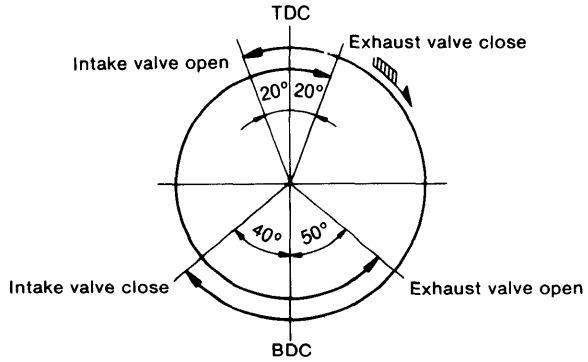

Intake and exhaust valve head clearance	0.15mm (0.0059in.)
Intake valve open b. TDC	20°
Intake valve close a. BDC	50°
Exhaust valve open b. BDC	50°
Exhaust valve close a. TDC	20°

7-3 Inspection

Since the cam surface is tempered and ground, there is almost no wear. However, measure the height of the intake and exhaust cams, and replace the camshaft when the measured value exceeds the wear limit.

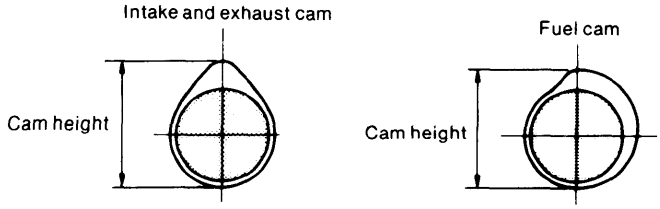

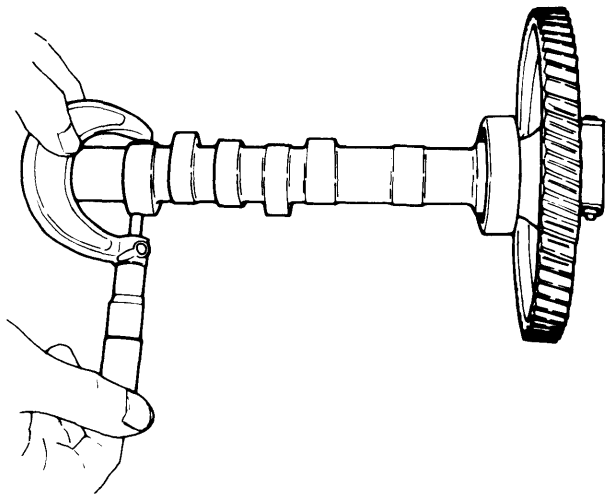

mm (in.)

		Maintenance standard	Clearance at assembly	Maximum allowable clearance
Flywheel side	Shaft bearing section outside diameter	ø34(1.3386)	0.050 ~ 0.100 (0.0020 ~ 0.0039)	0.15 (0.0059)
	Bearing inside diameter	ø34(1.3386)		
Center	Bearing section outside diameter	ø46(1.8110)	0.050 ~ 0.100 (0.0020 ~ 0.0039)	0.15 (0.0059)
	Bearing inside diameter	ø46 (1.8110)		

mm (in.)

		Maintenance standard	Wear limit
Camshaft height	Intake and exhaust cam	38.63 (1.5209)	38.13 (1.5012)
	Fuel cam	35.0 (1.3780)	34.9 (1.3740)
Camshaft side clearance		0	—

7-4 Camshaft ball bearing

The camshaft bearing is a single row deep groove ball bearing. The construction and material of this ball bearing is such that it can withstand the radial load, thrust loads in both directions, and a combination of both these loads. When the ball bearing does not rotate smoothly, or when the axial direction play is large, replace the bearing.
(Ball bearing type: 6205)

7-5 Tappets

These mushroom type tappets feature a special iron casting with chill-hardened contact surfaces for high wear resistance. The center of the cam surface width and the center of the tappet are offset to prevent eccentric wear of the contact surface.

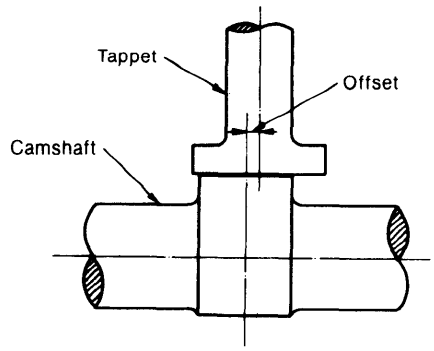

7-5.1 Tappet disassembly precautions

The cylinder number and intake and exhaust must be clearly indicated when disassembling the camshaft and tappets.

7-5.2 Tappet stem wear and contact

Measure the outside diameter of the tappet stem, and replace the tappet when the wear limit is exceeded or contact is uneven.

mm (in.)

	Maintenance standard	Wear limit
Tappet stem outside diameter and guide hole	⌀11(0.4331)	—
Tappet stem and guide hole clearance	0.006 ~ 0.035 (0.0002 ~ 0.00138)	0.10 (0.0039)

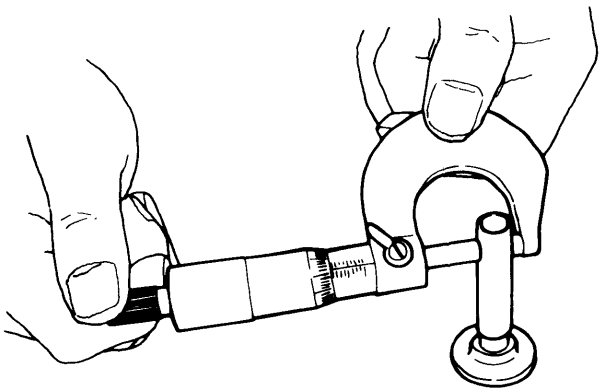

7-5.3 Tappet and cam contact surface

Since the tappet and cam are offset, the tappet rotates in an up and down movement during operation, so there is no uneven contact.
Since eccentric wear will occur if cam tappet contact is poor, replace the tappet if there is any uneven contact or deformation.

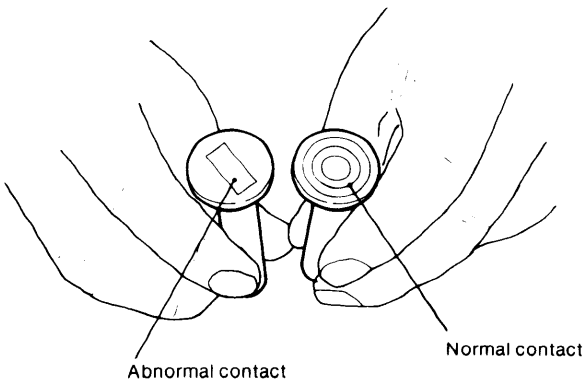

Contact surface conditions are shown in the following:

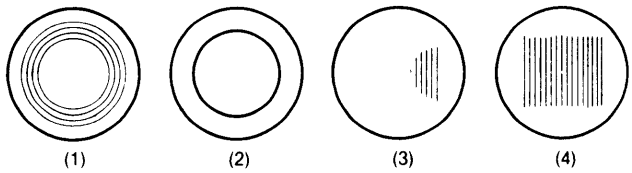

(1), (2) *Traces when the tappet is rotating normally.*
(3), (4) *Traces when the tappet does not rotate and the contact surface remains still and only the point of contact wears away excessively. Discover the reason for the lack or rotation and replace the tappet.*

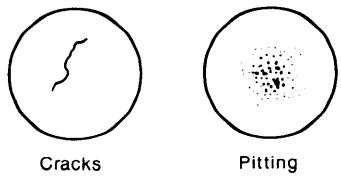

Also, there may be perforated pittings or cracks on the contact surface of the tappet. In such cases, discover the reason for abnormality and replace the tappet.

7-6 Push rods

The push rods are sufficiently rigid and strong to prevent bending.
Place the push rod on a stool or flat surface and measure the clearance between the center of the push rod and the flat surface, and replace the push rod if the wear limit is exceeded.

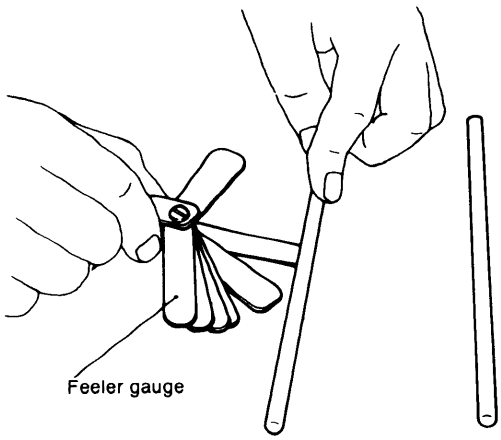

Check both ends for wear and peeling, and replace the push rod if faulty.

mm (in.)

	Maintenance standard	Wear limit
Push rod bend	0.03 or less (0.00118 or less)	0.3 (0.0118)
Push rod length	197 (7.7560)	195 (7.6772)

8. Timing Gear

8-1 Timing gear train construction

The drawing shows the construction of the timing gear chamber.
The crankshaft gear drives the camshaft gear and the lubrication oil pump driving gear. The camshaft gear drives the gear which acts as the fuel-feed pump driving gear and the starting shaft gear, as well as tachometer driving gear (for old engine type) by the intermediate gear.

The crankshaft gear is tightened onto the crankshaft together with the crankshaft V pulley by a tightening nut.
The camshaft gear is tightened onto the camshaft together with the governor weight support.
All gears used are helical gears except for the tachometer driving gear (for old engine type) and the intermediate gear.

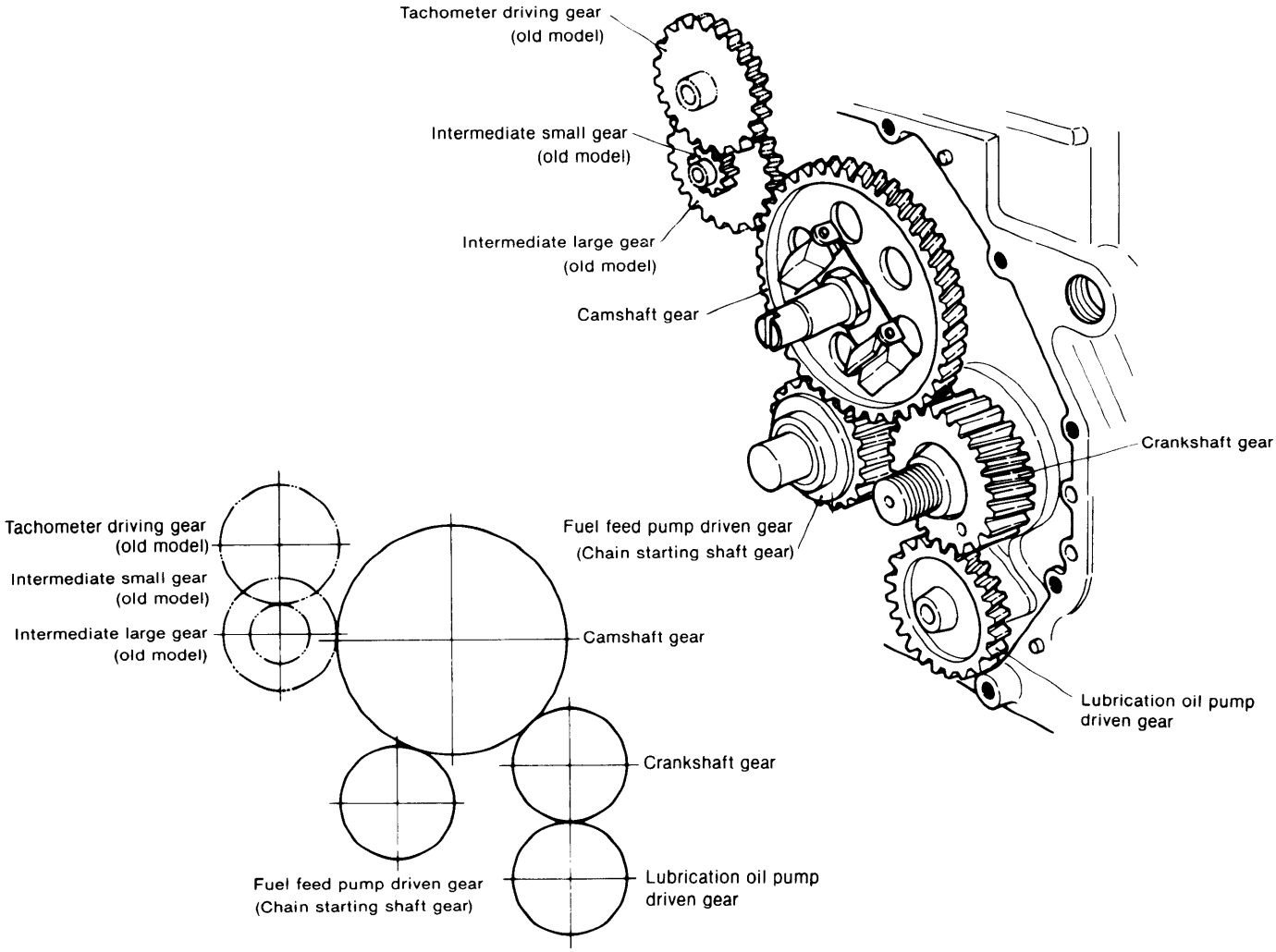

	Tooth profile	Module	Number of teeth
Lubrication oil pump driven gear	Helical	2.5	29
Crankshaft gear	Helical	2.5	29
Camshaft gear	Helical	2.5	58
Fuel feed pump driven gear (Chain starting shaft gear)	Helical	2.5	29
Intermediate large gear	Helical	2.5	29
Intermediate small gear	Spur	2.5	15
Tachometer driving gear	Spur	2.5	30

8-2. Disassembly and reassembly of the timing gear

8-2.1 Disassembly

(1) Remove the alternator.
(2) Remove the cooling water pump.
(3) Remove the chain starting divice.
(4) Remove the tachometer driving gear or the blind nut.

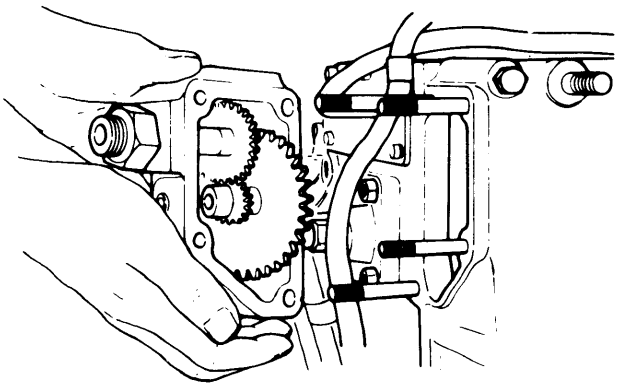

(5) Remove the crankshaft V pulley.
(6) Remove the cover of the fuel pump adjustment cover and remove the governor link and regulator spring.
(7) Remove the fuel feed pump.
(8) Remove the chain sprocket and the cover of the driving gear shaft.
(9) Remove the gear case.

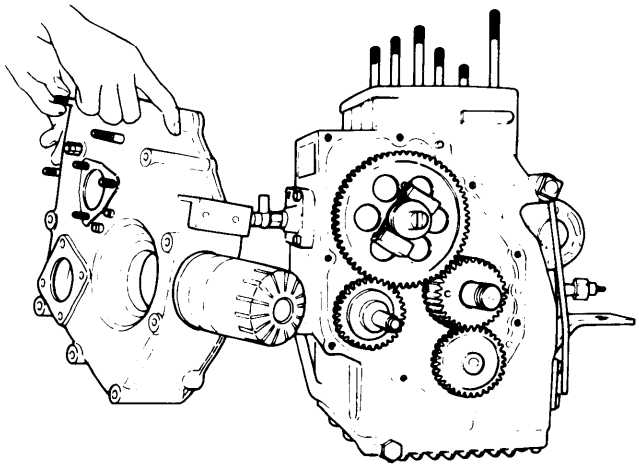

(10) Remove the chain starting shaft and its gear.

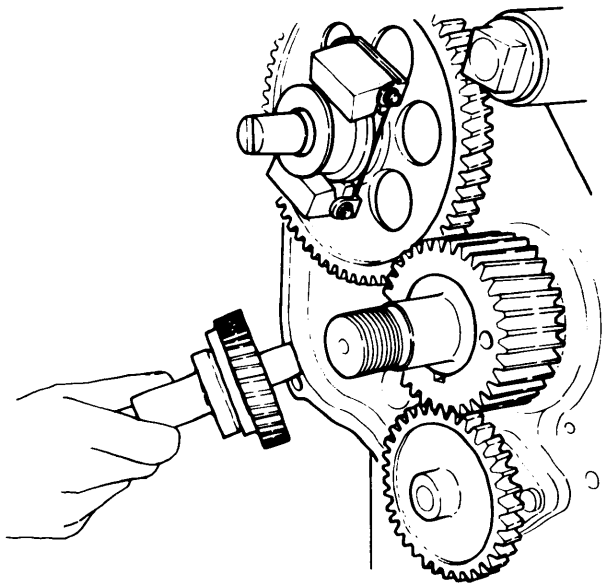

(11) Remove the governor sleeve.
(12) Pull out each gear.

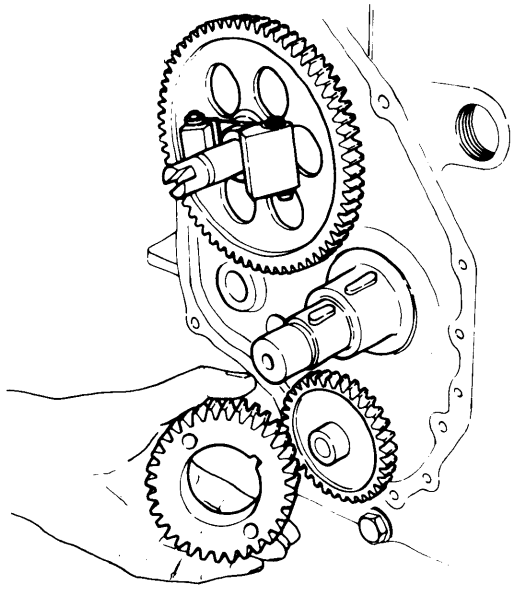

8-2.2 Reassembly

Reassemble in the reverse order as disassemblying. However, the reassembly of the governor parts and timing gear case are written in Chapter 4.

8-2.3 Disassembly and reassembly precautions

(1) Timing mark

A timing mark is provided on the crankshaft gear and camshaft gear to adjust the timing between opening and closing of the intake and exhaust valves and fuel injection when the piston is operated

Always check that these timing marks are aligned when disassembling and reassembling the timing gear.

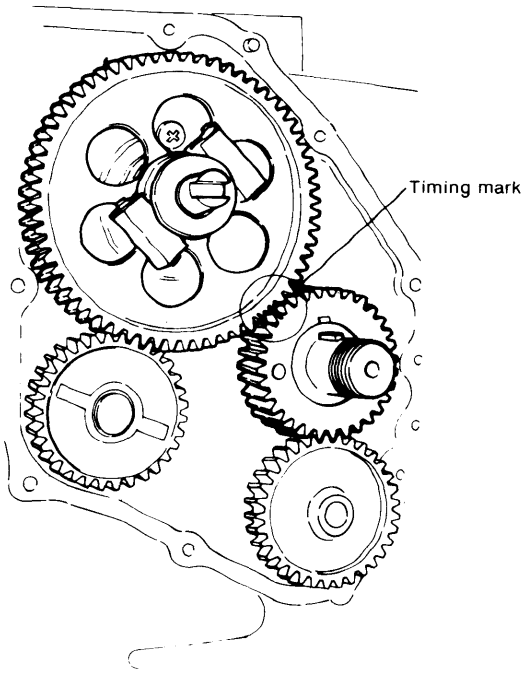

8-3 Inspection

8-3.1 Backlash

Unsuitable backlash will cause excessive wear or damage at the tooth top and abnormal noise during operation. Moreover, in extreme cases, the valve and fuel injection timing will deviate and the engine will not run smoothly.

When the backlash exceeds the wear limit, repair or replace the gears as a set.

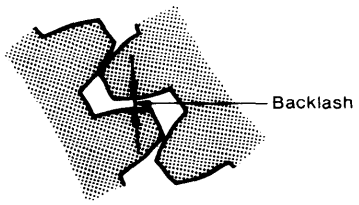

mm (in.)

	Maintenance standard	Wear limit
Crankshaft gear and camshaft gear backlash	0.08 ~ 0.16 (0.0031 ~ 0.0062)	0.3 (0.0118)
Crankshaft gear and lubrication oil pump driven gear backlash		
Camshaft gear and fuel feed pump driven gear backlash		

Measuring backlash

(1) Lock one of the two gears to be measured and measure the amount of movement of the other gear by placing a dial gauge on the tooth surface.

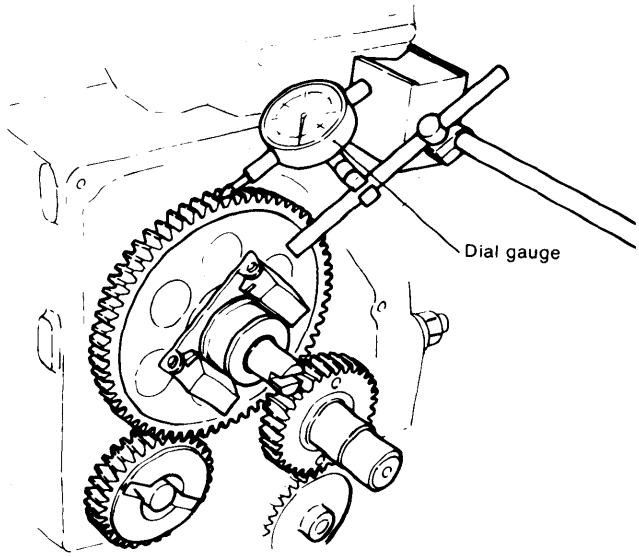

(2) Insert a piece of quality solder between the gears to be measured and turn the gears. The backlash can be measured by measuring the thickness of the crushed part of the solder.

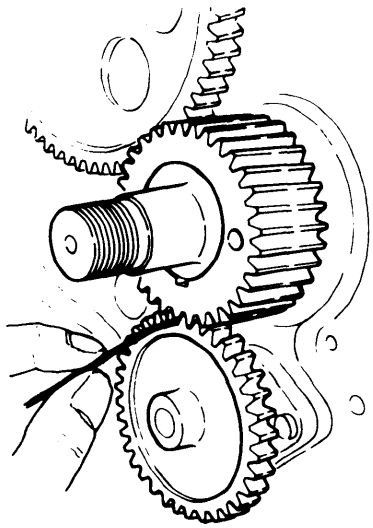

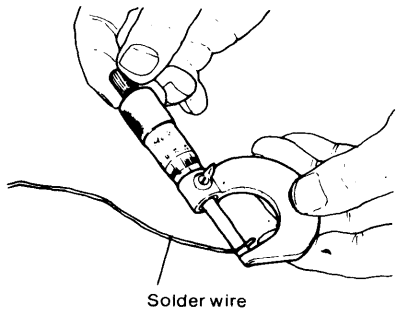

8-3.2 Inspecting the gear tooth surface

Check the tooth surface for damage caused by pitching and check tooth contact. Repair if the damage is light. Also inspect the gears for cracking and corrosion.
When gear noise becomes high because of wear or damage, replace the gears as a set.

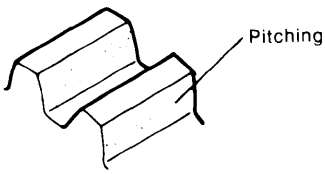

8-3.3 Inspecting the gear boss

Check for play between each gear and the gear shaft, burning caused by play, key damage, and for cracking at the edge of the key groove. Replace the gears when faulty.

CHAPTER 3

FUEL SYSTEM

1. Construction. 3-1
2. Injection Pump. 3-3
3. Injection Valve 3-15
4. Fuel Filter. 3-19
5. Fuel Feed Pump. 3-20
6. Fuel Tank (Option) 3-21

1. Construction

The fuel system consists mainly of an injection pump, injection pipe, and an injection nozzle, plus a fuel tank, feed pump, fuel filter and other associated parts. The injection pump is driven by a fuel cam mounted on the camshaft and is controlled by a governor. Fuel stored in the fuel tank is fed to the fuel filter through the feed pump. (The feed pump is indispensable when the fuel tank is installed lower than the injection pump.)
Dirt and other impurities in the fuel are removed by the filter and the clean fuel is sent to the injection pump, which applies the necessary pressure for injection to the fuel and atomizes the fuel by passing it through the injection nozzle. The injection pump also controls the amount of fuel injected and the injection timing according to the engine load and speed by means of a governor.
The injection pump feeds the fuel to the injection nozzle through a high pressure pipe. The pressurized fuel is atomized and injected by the injection nozzle into the precombustion chamber.
Fuel that overflows the injection nozzle is returned to the fuel filter through the fuel return pipe. The quality of the equipment and parts comprising the fuel injection system directly affects combustion performance and has a considerable effect on engine performance. Therefore, this system must be inspected and serviced regularly to ensure top performance.

1-1 Fuel system diagram

1-1.1 2QM20(H)

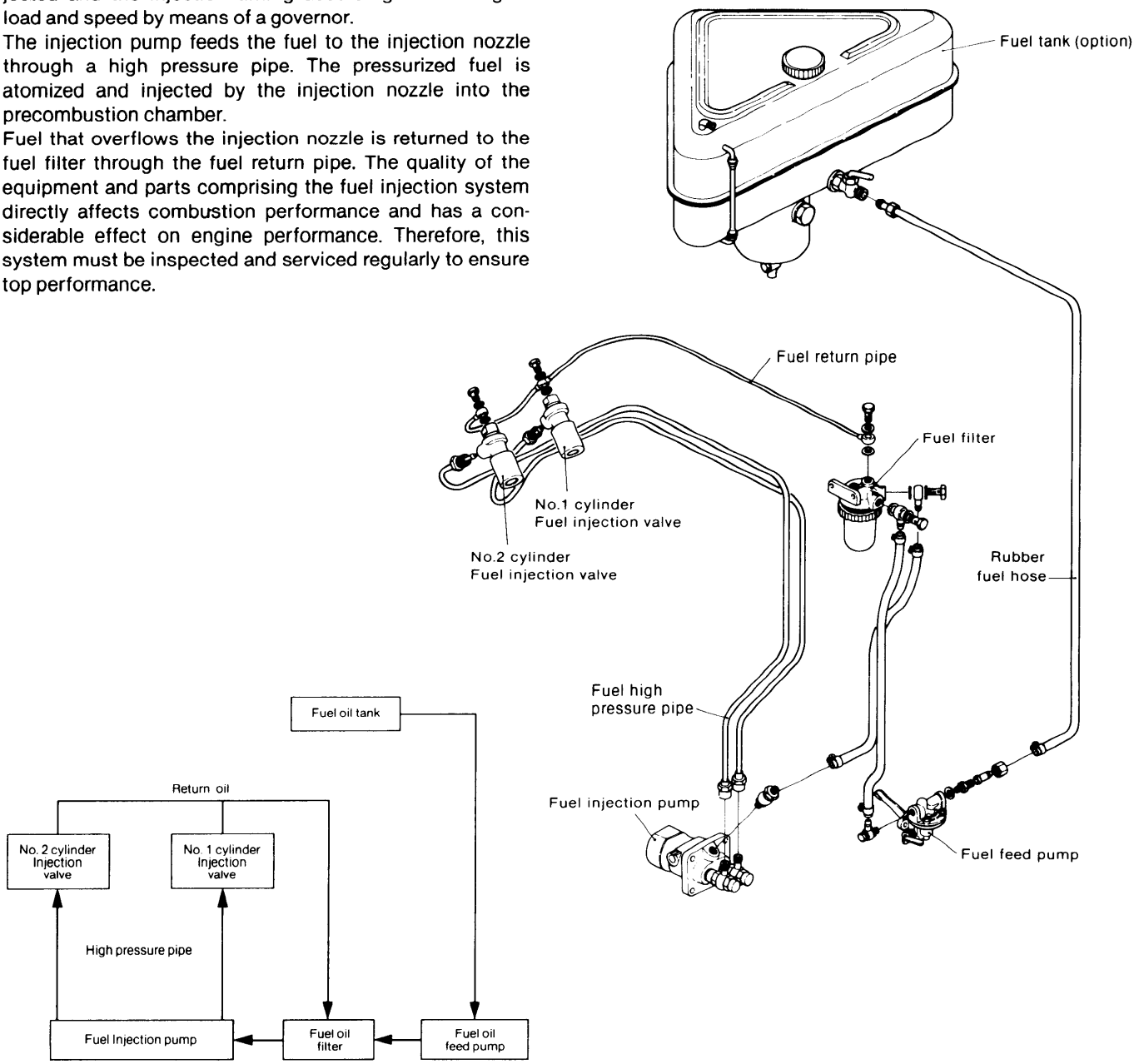

1-1.2 3QM30(H)

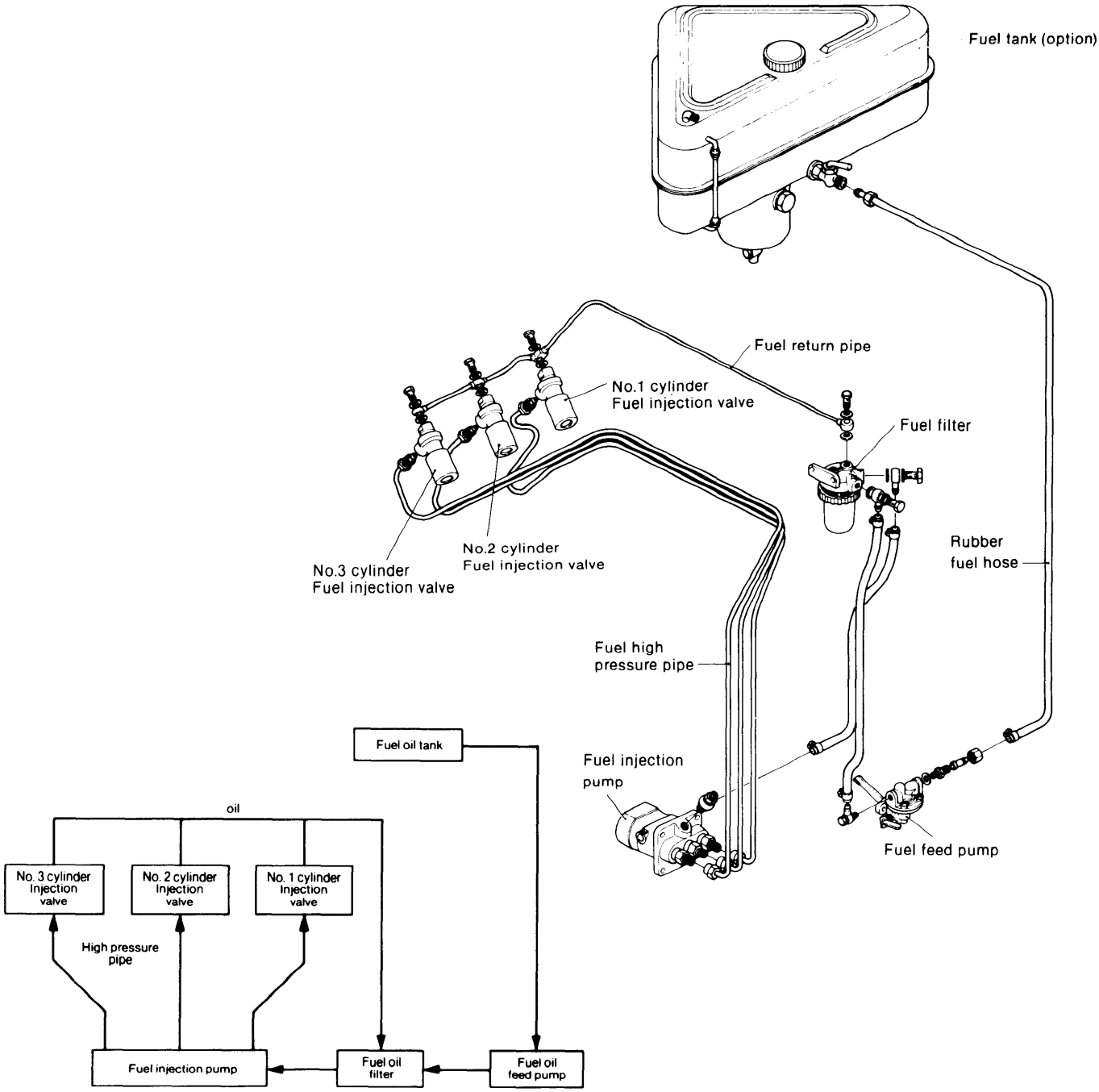

1-2 Fuel injection system specifications

	2QM20(H)	3QM30(H)
Type of injection pump	YPFR-2K (Bosch type)	YPFR-3K (Bosch type)
Type of injection nozzle	YDN-OSDYD1 (Throttle)	
Injection pressure	160 kg/cm² (2276 lb/in.²)	
Plunger diameter × stroke	ø7mm (0.2756in.) × 7mm (0.2756in.) with top lead	
Delivery valve suction capacity	23.5mm³/st (0.0014in.³/st)	
Fuel feed pressure	0.1 kg/cm² (1.4224 lb/in.²)	

2. Injection Pump

The injection pump is the most important part of the fuel system. This pump feeds the proper amount of fuel to the engine at the proper time in accordance with the engine load.
This engine uses a Bosch integral type injection pump for two/three cylinders. It is designed and manufactured by Yanmar, and is ideal for the fuel system of this engine.
Since the injection pump is subjected to extremely high pressures and must be accurate as well as deformation—and wear-free, stringently selected materials are used and precision finished after undergoing heat treatment.
The injection pump must be handled carefully. Since the delivery valve and delivery valve holder and the plunger and plunger barrel are lapped, they must be changed as a pair.
The fuel injection pump is constructed from the fllowing main parts.

(1) Pump parts which compress and deliver the fuel: plunger, plunger barrel.
(2) Parts which move the plunger: camshaft, tappet, plunger spring, plunger spring retainer.
(3) Parts which control the injection amount: control rack, control pinion, control sleeve.
(4) Parts which prevent back flow and dripping during injection: delivery valve.

NOTE: The same construction parts are used for the fuel injection pump of the 2QM20(H) and 3QM30(H). Only the fuel injection pump body itself, plunger guide stopper pin and fuel control rack are different, and it may be understood that the injection pump of the 3QM30 is the same as that of the 2QM20 with the addition of one more cylinder.
** Genuine parts for the delivery valve and plunger consist of the delivery valve and delivery valve holder and plunger and plunger barrel respectively.*

2-1 Construction

2-1.1 2QM20(H)

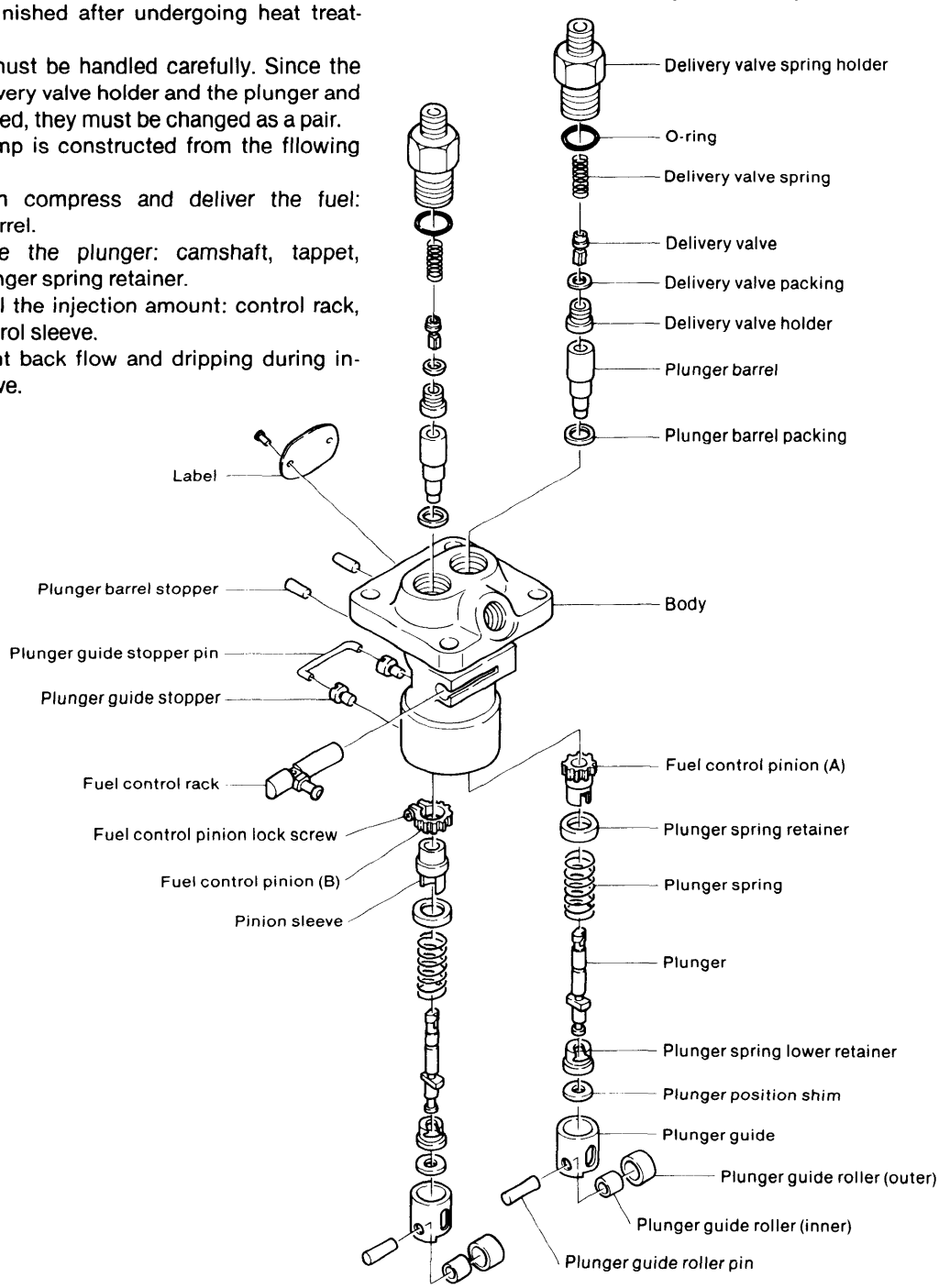

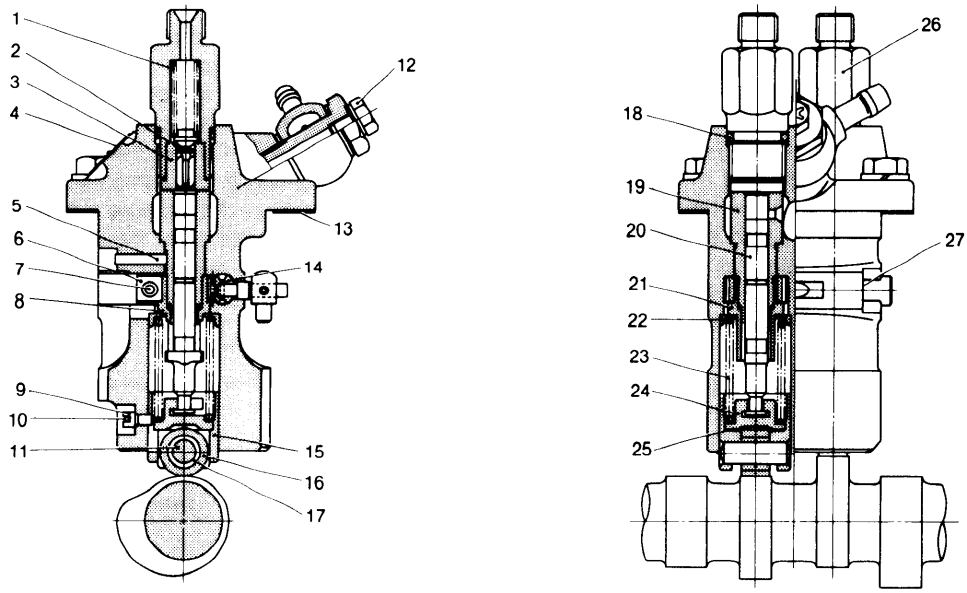

1. Delivery valve spring
2. Delivery valve
3. Delivery valve holder
4. Label
5. Plunger barrel stopper
6. Fuel control pinion (B)
7. Fuel control pinion lock screw
8. Pinion sleeve
9. Plunger guide stopper
10. Plunger guide stopper pin
11. Plunger guide roller pin
12. Air bleeding bolt
13. Injection timing shim
14. Fuel control rack
15. Plunger guide
16. Plunger guide roller (outer)
17. Plunger guide roller (inner)
18. O-ring
19. Plunger barrel
20. Plunger
21. Fuel control pinion (A)
22. Plunger spring retainer
23. Plunger spring
24. Plunger spring lower retainer
25. Plunger position shim
26. Delivery valve spring holder
27. Reference face

2-1.2 3QM30(H)

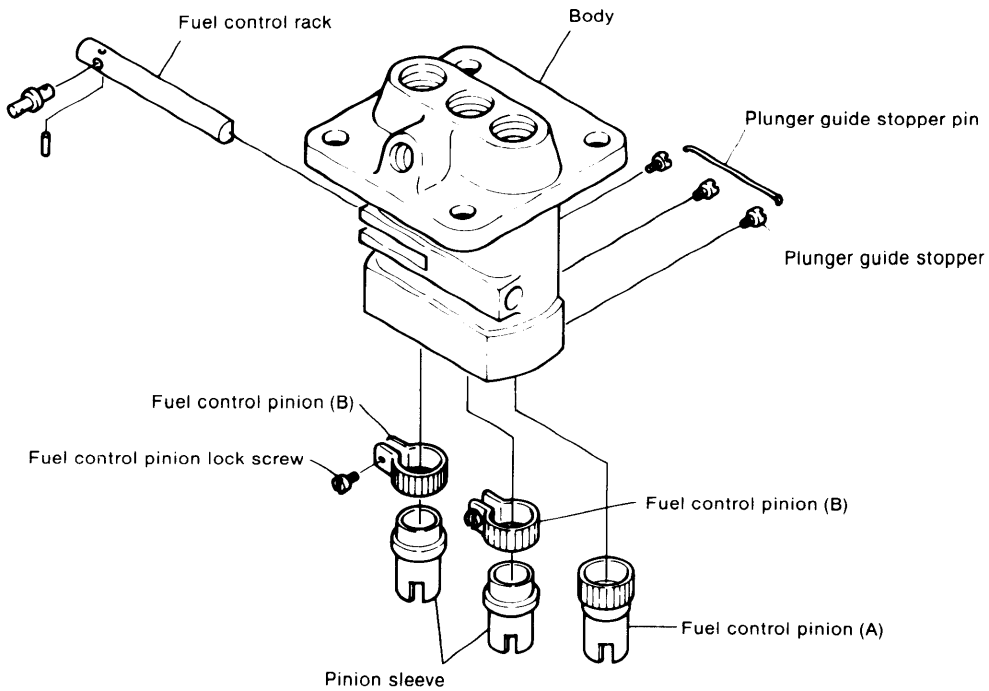

2-2 Operation of plunger

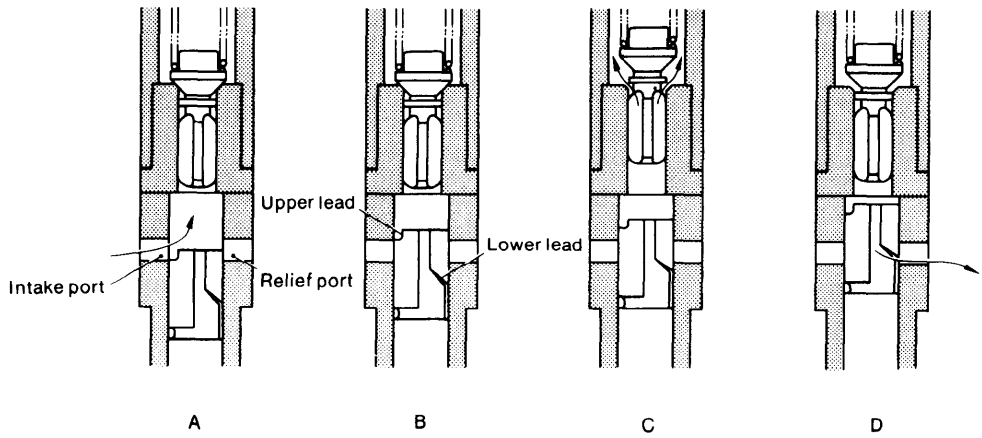

A. When the plunger reaches its lowest position (when the fuel cam reaches base circle), the top and vertical grooves of the plunger are filled with fuel through the intake port.
B. When the plunger rises to the position at which the upper lead closes the intake port, the fuel begins to push the delivery valve upward.
C. As the plunger rises further, the delivery valve is pushed up and the fuel is sent to the injection nozzle through the delivery valve and high pressure pipe.
D. The plunger continues to rise until the lower lead closes the discharge port. At this point the fuel is discharged through the relief port from the vertical groove, the delivery valve is pushed back, and fuel feed is halted.

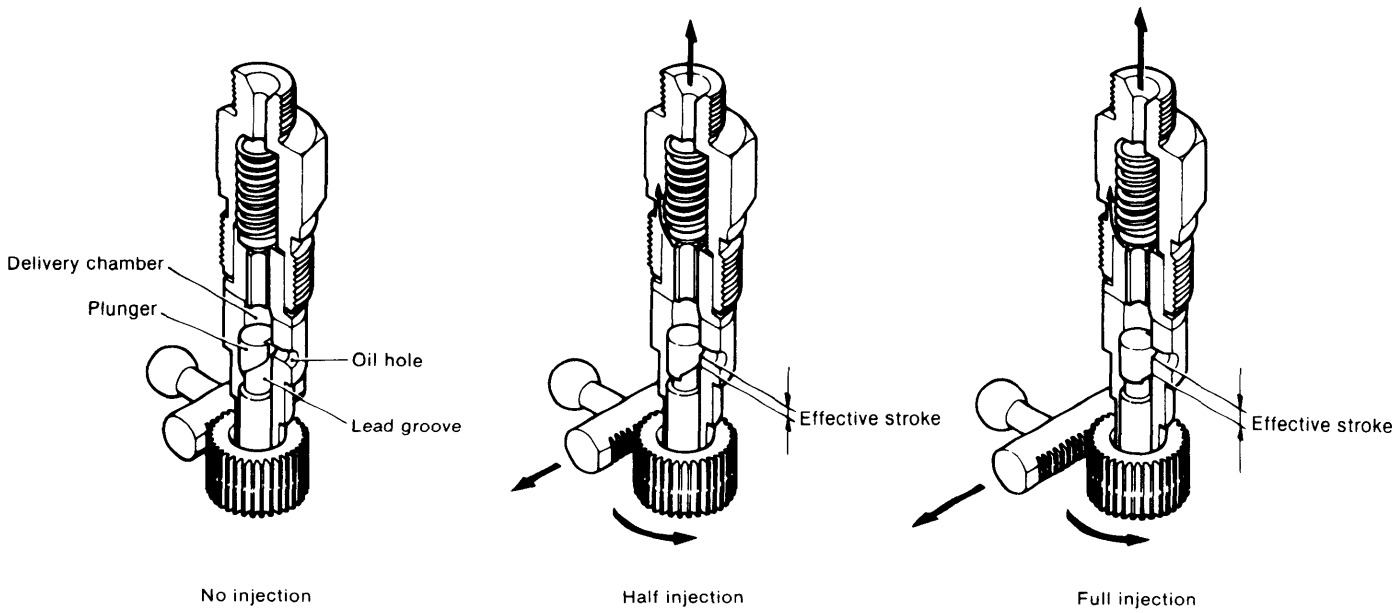

The amount of fuel and the injection timing are adjusted by rotation of the plunger with the control sleeve and by changing the relative positions of the upper lead, lower lead, and ports. In other words, the amount of fuel and the injection timing are adjusted by changing the plunger stroke from the closing of the intake port by the upper lead to the opening of the relief port by the lower lead.

NOTE: The plunger is an integral part of the plunger barrel and takes in and compresses fuel by reciprocating inside the plunger barrel. The plunger and plunger barrel are precisely machined, and because the plunger is driven in an extremely small space, the two should be used together and should not be changed with other cylinders.

2-3 Delivery valve

2-3.1 Delivery valve fuel suction collar

The delivery valve of this engine is equipped with a piston (collar), as shown in the figure. This collar prevents injection cutting and dripping—caused by a lowering of the pressure inside the pipe—by sucking back the fuel in the high pressure pipe when the delivery valve drops due to the stopping of the effective stroke of the plunger.

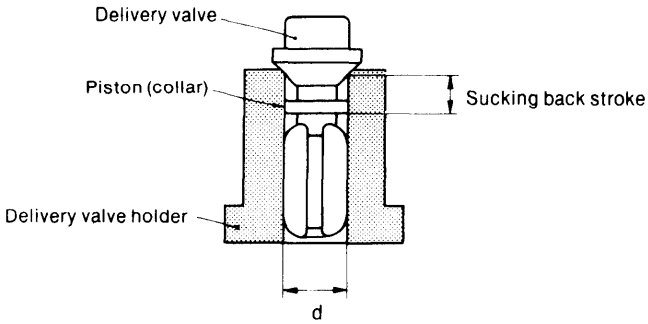

Amount of fuel sucked back: $\pi/4\ d^2\ell = 23.5mm^3$/stroke (0.0014in³./st.)

2-3.2 Operation of delivery valve

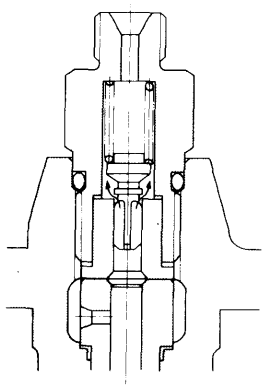

Open

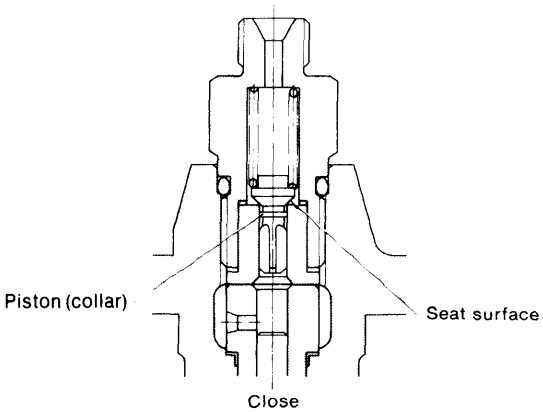

Close

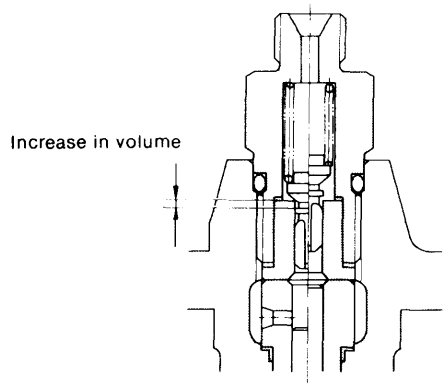

Sucking-back of fuel

(1) The delivery valve is pressed against the seat surface by the delivery valve spring. When fuel is pressurized by the rising of the plunger, the pressure forces open the valve and fuel is delivered to the injection pipe.
(2) Next, after the plunger pressurizes and delivers the fuel, the pressure of the plunger side decreases and the valve is depressed by the spring.
At the same time the piston in the delivery valve also descends, lowering the hydraulic pressure inside the injection pipe and sucking back the fuel. This improves the disconnection of injection at the nozzle and prevents dripping.
(3) The valve is depressed further, and when it rests on the seat surface, back flow of fuel on the plunger side is prevented and a fixed remaining pressure is maintained.

2-4 Disassembly

As a rule, the injection pump should not be disassembled, but when disassembly is unavoidable, proceed as described below.
The injection pumps is arranged in No. 1 cylinder to No. 2/3 cylinder order, from right to left, as viewed from the name plate installed at the top of the pump body.
When disassembling the pumps, divide the parts into separate groups, using disassembly plates.
If these parts are mixed together, reassembly becomes impossible without a pump tester.

(1) Remove the plunger guide stopper pin with needle nose pliers.

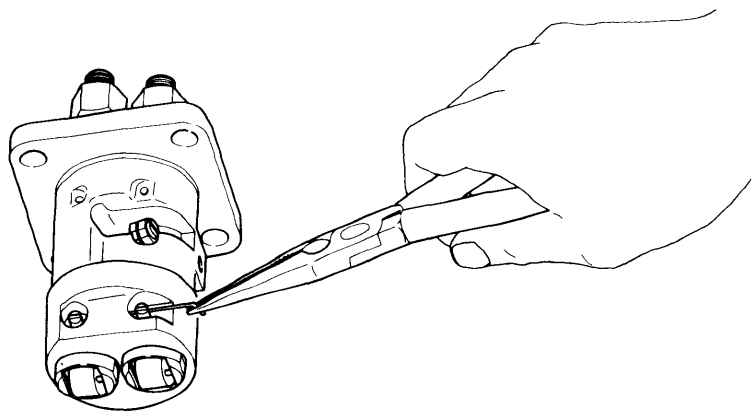

(2) Remove the No. 2/3 plunger guide stopper.
The stopper can be removed by pushing the plunger guide down with the palm of your hand.
(3) Remove the No. 2/3 plunger guide.

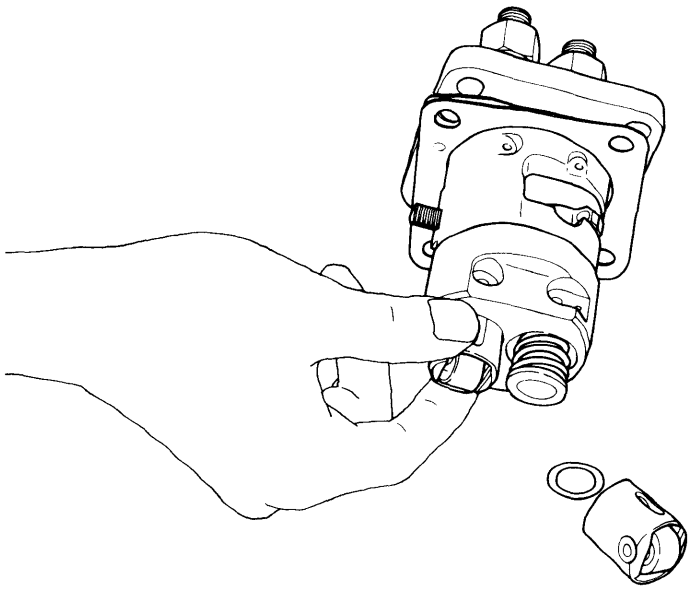

(4) Remove the No. 2/3 plunger and plunger spring lower retainer and plunger shim; be careful not to damage the plunger.
(5) Remove the No. 2/3 plunger spring.

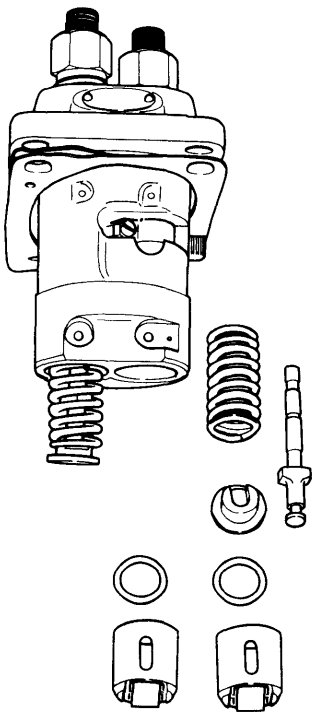

(6) Remove the No. 2/3 plunger spring upper retainer, using your fingers or tweezers.

(7) Remove the No. 2/3 control sleeve (A).

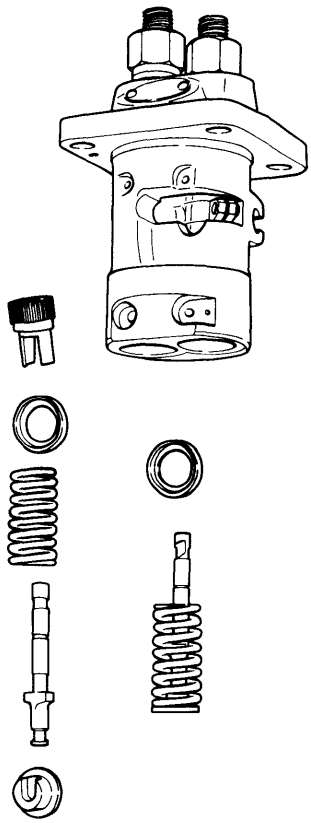

(8) Remove the No.2/3 delivery valve holder; be careful not to damage the O-ring.
(9) Remove the No. 2/3 delivery valve spring.
(10) Remove the No. 2/3 delivery valve, delivery valve seat and packing.

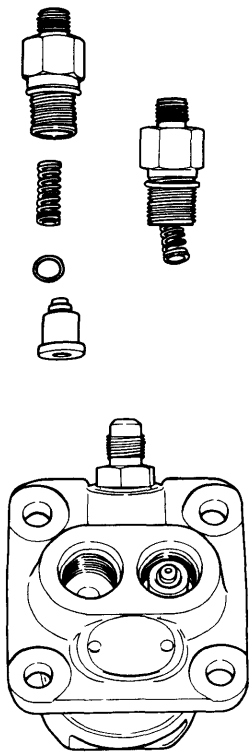

(11) Remove the No. 2/3 plunger barrel; be careful not to damage the face that matches the delivery valve seat.
(12) Since the No. 1 fuel adjusting gear is separated into a control sleeve (B) and a pinion, put matching marks on both parts with a scribe; otherwise, reassembly may be impossible.

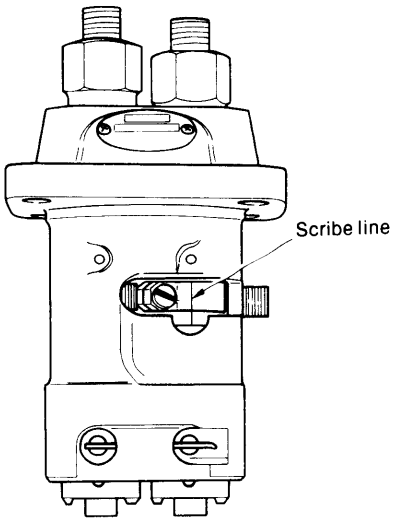

(13) Loosen the No. 1 fuel adjusting set screw.
(14) Perform steps (2)—(6) above on the No. 1 cylinder pump.
(15) Remove the No. 1 control sleevel (B) using tweezers so that the sleeve does not drop into the gears.
(16) Perform steps (8)—(11) above on the No. 1 cylinder pump.
(17) Remove the No. 1 pinion.
(18) Remove the control rack.
(19) Remove the plunger barrel packing.

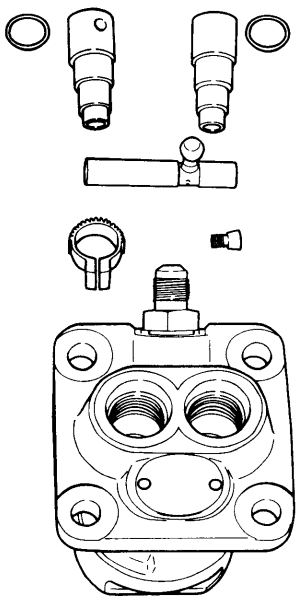

2-5 Inspecting injection pump parts

2-5.1 Tappet

Inspect the cam sliding surface of the tappet roller for wear, scoring and peeling; replace the tappet and roller assembly when the total tappet and roller play exceeds 0.3mm.

2-5.2 Control rack and pinion

If the control rack does not move smoothly when a force of within 60g is applied, replace the rack and pinion assembly.

2-5.3 Plunger

(1) Inspect the plunger for wear, scoring and discoloration around the lead. If any problems are found, conduct a pressure test and replace the plunger and plunger barrel assembly.

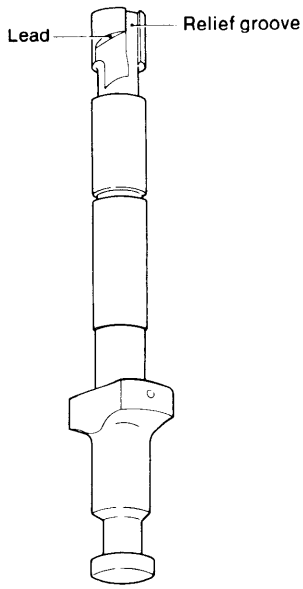

(2) Inspect the outside sliding surface of the plunger with a magnifying glass. Lap or replace the plunger and plunger barrel assembly when corrosion, hairline cracks, staining and/or scoring are detected.
(3) Check the clearance between the plunger collar and control sleeve groove. Replace these parts when wear exceeds the specified limit.
(4) After cleaning the plunger, tilt it approximately 60°, as shown in the figure, and slowly slide it down. Repeat this several times while rotating the plunger. The plunger should slide slowly and smoothly. If it slides too quickly, or binds along the way, repair or replace it.

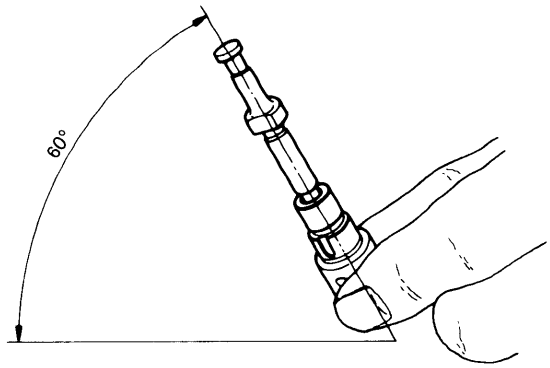

2-5.4 Delivery valve

(1) Replace the delivery valve if the return collar and seat are scored, dented or worn.

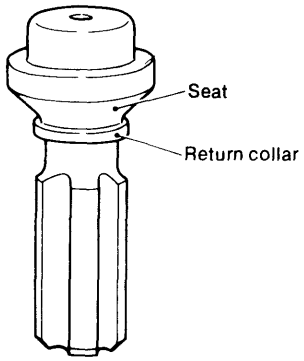

(2) After thoroughly washing the delivery valve, block the bottom of the valve seat with your finger, push the valve lightly in the manner shown in the figure. Remove your finger. The valve should return. If it doesn't, the return collar is heavily worn and must be replaced.

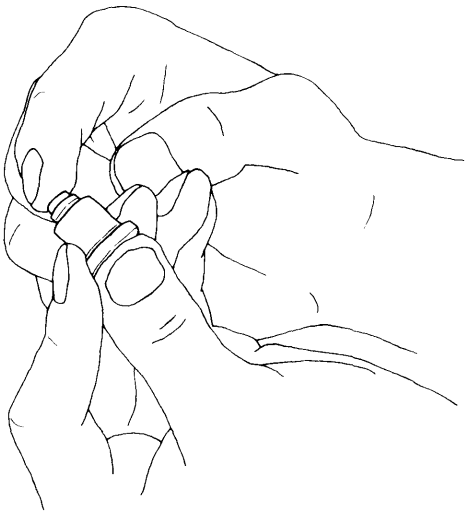

2-5.5 Plunger spring and delivery valve spring

Inspect the plunger spring and delivery valve spring for fractured coils, rust, inclination and permanent strain. Replace the spring when faulty.

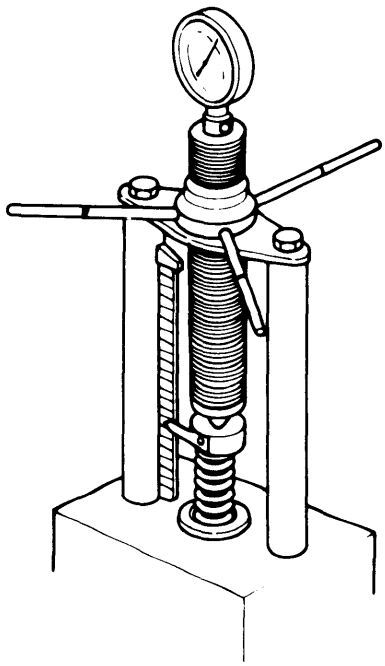

2-5.6 Plunger guide

Inspect the sliding face of the plunger guide for damage and wear. Replace the spring when faulty.

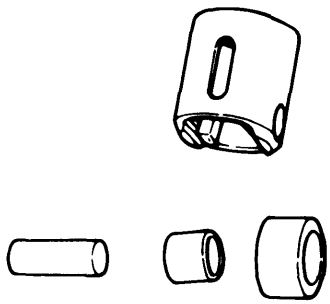

2-6 Reassembly

To ensure that the injection pump is correctly reassembled,the following points must be kept in mind:

- The parts for each cylinder must not be mixed together.
- When parts are replaced, the parts for each cylinder must always be replaced at the same time.
- When assembling, parts must be washed in fuel oil and matching marks and scribe lines must be lined up.

(1) Install the No. 2/3 plunger barrel packing.
(2) Insert the No.2/3 plunger barrel by aligning the groove of the barrel lock pin.

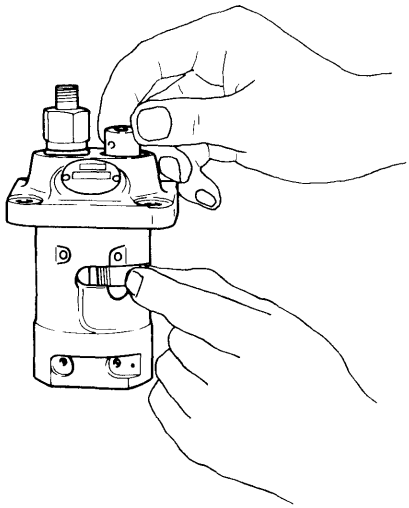

(3) Install the No. 2/3 delivery valve, delivery valve seat and packing.

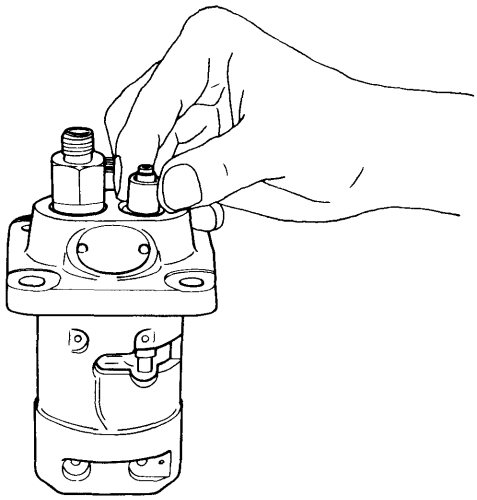

(4) Insert the No. 2/3 delivery valve spring.
(5) Tighten the No. 2/3 delivery valve holder.
Tightening torque: 4—4.5kg-m(29—32.6 lb-ft)

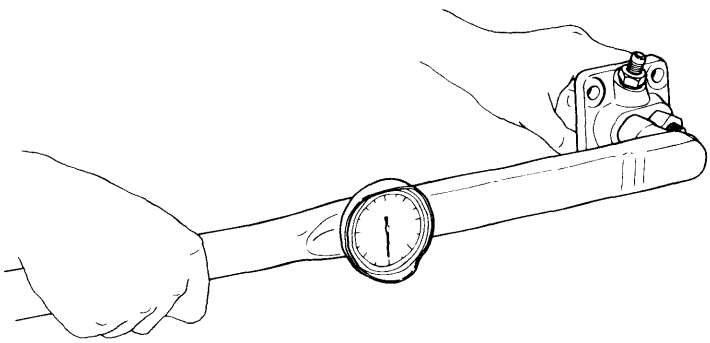

(6) Insert the control rack, making sure that it is inserted in the proper direction.

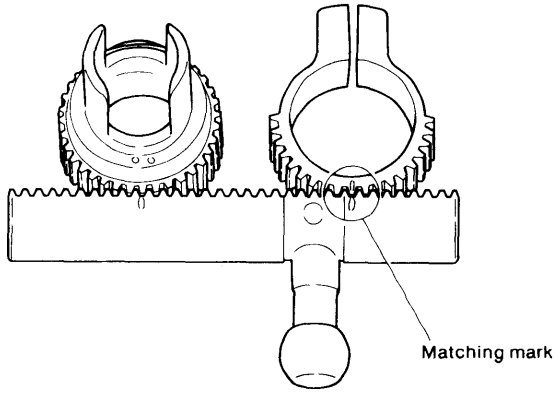

(7) Insert the No. 2/3 control sleeve (A). The matching marks on the sleeve must line up with those on the rack.
(8) Insert the No. 2/3 plunger spring upper retainer. Make sure that it is not inserted backwards.
(9) Insert the No. 2/3 plunger spring.
(10) Insert the No. 2/3 plunger; line up the matching marks.

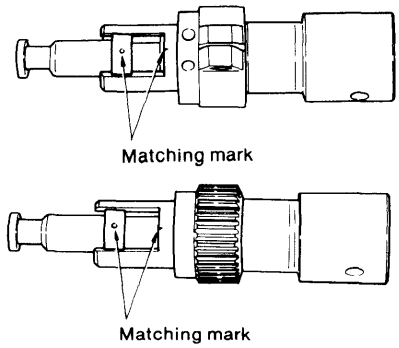

(11) Install the No. 2/3 plunger spring lower retainer. Make sure that it is not installed backwards.
(12) Insert the plunger shim.
(13) Insert the No. 2/3 plunger guide.
(14) Insert the No. 2/3 plunger guide stopper.
Insert the stopper. while pushing the plunger guide with your hand. While moving the rack, push the plunger guide so that the plunger collar fits into the groove of the pinion.
(15) Insert the No. 1 pinion into the pump body.
(16) Perform steps (1)—(5) above on the No. 1 cylinder pump.
(17) Insert the No. 1 control sleeve and tighten with the set screw.
Align the scribe marks of the sleeve and pinion.
(18) Perform steps (8)—(14) above on the No. 1 cylinder pump.
(19) Install the plunger guide stopper.

NOTE: When the tightening torque of the delivery valve holder exceeds the prescribed torque, the plunger will be distorted, the sliding resistance of the control rack will increase, and proper performance will not be obtained. Moreover, excessive tightening will damage the pump body and delivery valve gasket, and cause a variety of other problems.

2-7 Inspection after reassembly

When the engine runs roughly and the injection pump is suspected as being the cause, or when the pump has been disassembled and parts replaced, always conduct the following tests.

2-7.1 Control rack resistance test

After reassembling the pump, wash it in clean fuel, move the rack and check resistance as follows:

(1) This test is performed to determine the resistance of the control rack. When the resistance is large, the engine will run irregularly or race suddenly.
(2) Place the pump on its side, hold the control rack up and allow it to slide down by its own weight. The rack should slide smoothly over its entire stroke. Place the pump on end and perform the above test again; check for any abnormalities.
(3) Since a high sliding resistance is probably a result of the following, disassemble the pump and wash or repair it.

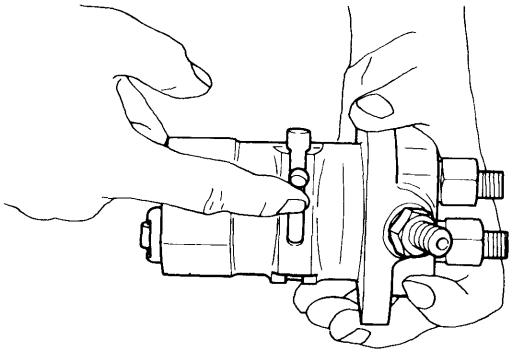

1) Resistance of the rotating and sliding parts of the plunger assembly is too high.
2) Delivery valve holder is too tight (plunger barrel distorted).
3) Control rack or control sleeve teeth and control rack outside circumference are dirty or damaged.
4) Injection pump body control rack hole is damaged.
5) Plunger barrel packing is not installed correctly and the barrel is distorted. (Since in this case fuel will leak into the crankcase and dilute the lubricating oil, special care must be taken).

2-7.2 Fuel injection timing

Fuel injection timing is adjusted by timing shims inserted between the pump body and gear case pump mounting seat.

When deviation of the No. 1, and other cylinder, injection interval occurs at the pump, the injection timing of one of the pumps is incorrect even though the other is properly set. Therefore, the injection pump must be mounted on the engine, and each cylinder injection timing adjusted.

Adjusting the injection timing

(1) Remove the high pressure pipe from the pump.
(2) Install a measuring pipe if the injection pump does not have a nipple on the delivery side.
(3) Bleed the air from the injection pump.

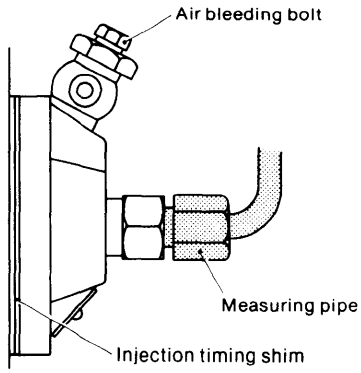

(4) Set the control rack to the middle fuel injection position (Pull the lever when setting the accelerator lever.)
(5) Turn the crankshaft slowly by hand, and read the timing mark (TD) on the crankshaft V-pulley the instant fuel appears at the measuring pipe or pipe joint nipple. (FiD + Fuel injection from delivery valve.)

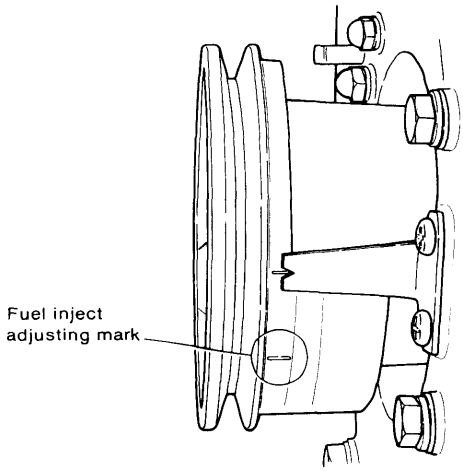

(6) If the injection timing is off, add plunger shims when the timing is slow, and remove shims when the timing is fast. Adjust the timing of every pump in the same manner. (Refer to item, "Plunger head gap adjustment".)
(7) After the injection timing of every pump has been matched, recheck the injection timing as described in item (5) above. If the injection timing is not properly set, adjust it with the timing shims.

	2QM20(H)	3QM30(H)
Fuel injection timing	b.TDC 25° ±2°	b.TDC 28° ±2°

The thickness of the plunger location adjusting shim and the injection timing adjusting plate is 0.1 mm and by this the injection timing can be changed by approximately 1° on the crankshaft.

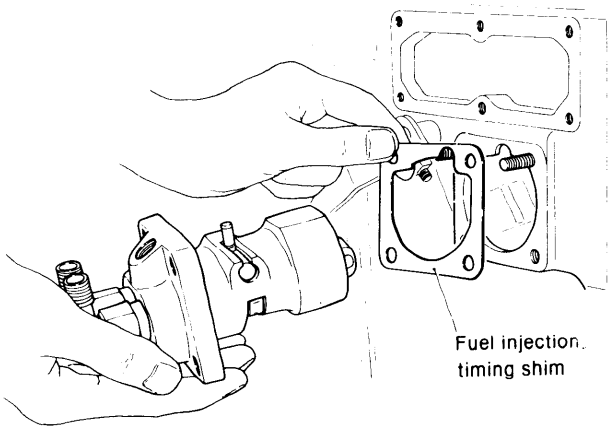

(8) Finally, turn the crankshaft slowly and confirm that it turns easily. If it is stiff or does not rotate, the plunger head gap is too small.

2-8 Injection pump adjustment

The injection pump is adjusted with an injection pump tester after reassembly.

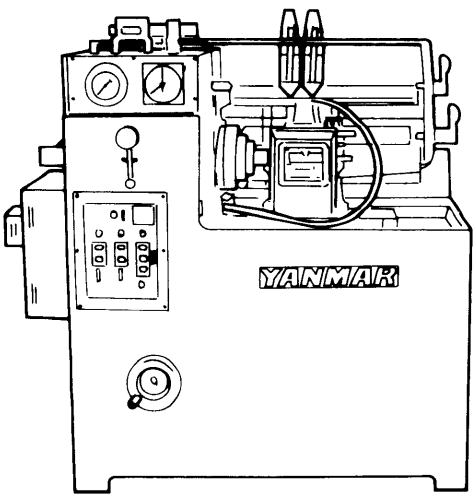

2-8.1 Setting pump on tester

(1) After the injection pump has been disassembled and reassembled, install it on a pump tester ...cam lift: 7mm (0.276in.).

(2) Confirm that the control rack slides smoothly. If it does not, inspect the injection pump and repair it so that the rack slides smoothly.
...control rack full stroke; 18mm (0.7087in.)

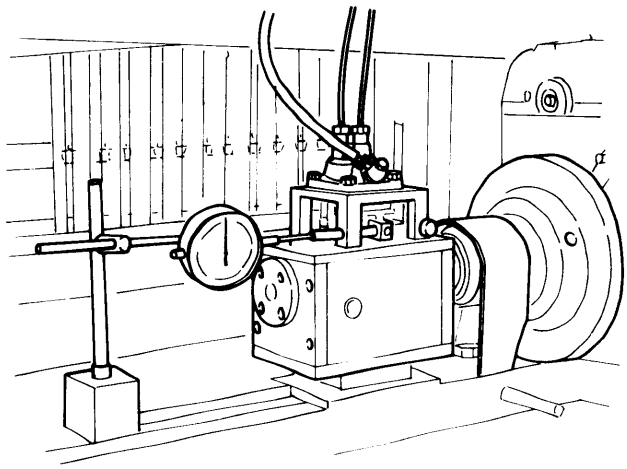

(3) Run the pump tester at low speed, loosen the air bleeder screw, and bleed the air from the injection pump.

2-8.2 Adjusting the plunger head gap

(1) Set the pump installation dimension (end of plunger barrel when the roller is on the cam base cycle) at 83mm (3.268in.), remove the delivery valve holder and delivery valve, and set the plunger to top dead center by turning the camshaft. Measure the difference in height (head gap) between the end of the plunger and the end of the plunger barrel using a dial gauge.

mm (in.)

Plunger head gap	0.5 ±0.05 (0.017 ~ 0.217)

(2) Using the plunger head gap measuring jig
1) Install a dial gauge on the measuring jig.
2) Stand the measuring jig on a stool and set the dial gauge pointer to O.
3) Remove the pump delivery valve and install the measuring jig.
4) Turn the camshaft to set the plunger to top dead center and read the dial gauge. The value given is the plunger head gap.

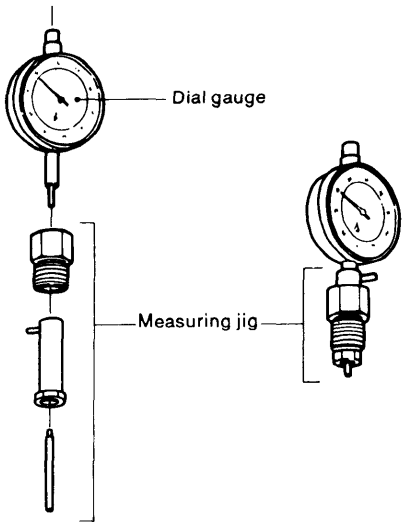

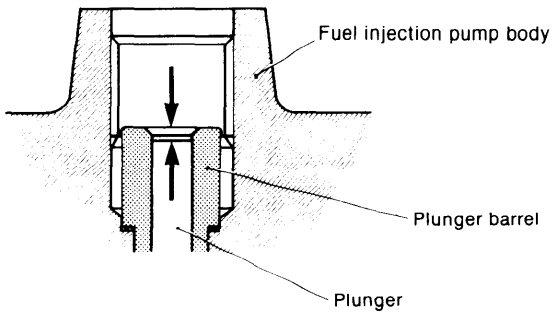

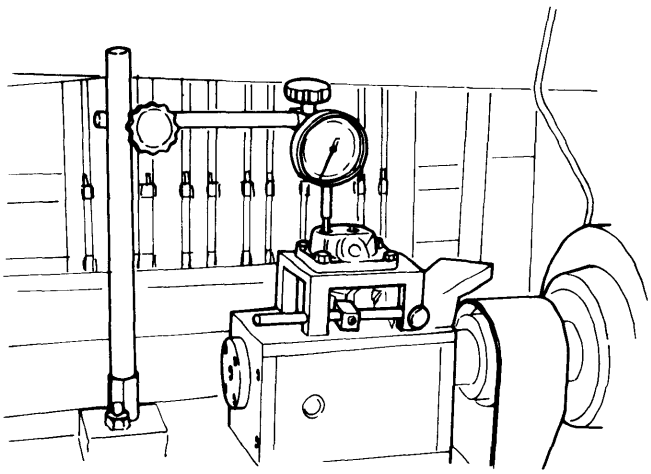

(3) When the plunger head gap is larger than the prescribed value, remove the plunger guide and insert plunger shims between the plunger spring lower retainer and the plunger guide. Adjust each pumps in the same manner.
Plunger shim thickness: 0.1mm (0.004in.),
0.2mm (0.008in.)

(4) After rechecking adjustment, install the delivery valve.
Delivery valve holder tightening torque: 4.0 ~ 4.5kg-m
(29. ~ 32.6 lb-ft)

2-8.3 Checking the cylinder injection interval

(1) Align the control rack punch mark with the pump reference face.

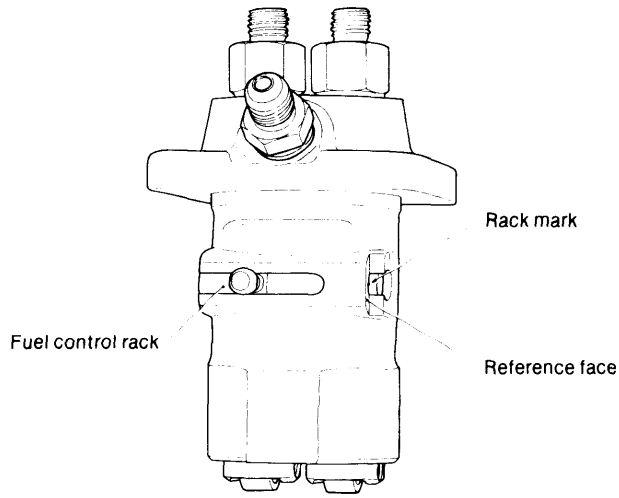

(2) Turn the pump by hand to check the No. 1 cylinder injection timing.

(3) Turn the pump in the prescribed direction and check the No. 2/3 cylinder injection timing.

(4) Using the plunger shims, adjust each cylinder injection timing interval to 180° for 2QM20(H), (240° for 3QM30(H)).

2QM20(H)	180° 540° 1 ~ 2 ~ 1
3QM30(H)	240° 240° 240° 1 ~ 3 ~ 2 ~ 1

2-8.4 Delivery valve oil-tight test

(1) Install a 1,000 kg/cm² (14,223 lb/in.²) pressure gauge on the delivery valve holder.

(2) Drive the fuel pump to apply a pressure of approximately 120 kg/cm² (1,707 lb/in.²) and measure the time required for the pressure to drop from 100 kg/cm² (1,422 lb/in.²) to 10 kg/cm² (142.2 lb/in.²)

Pump speed	200 rpm
Pressure drop standard	20 sec. or more
Pressure drop limit	5 sec. or less

2-8.5 Plunger pressure test

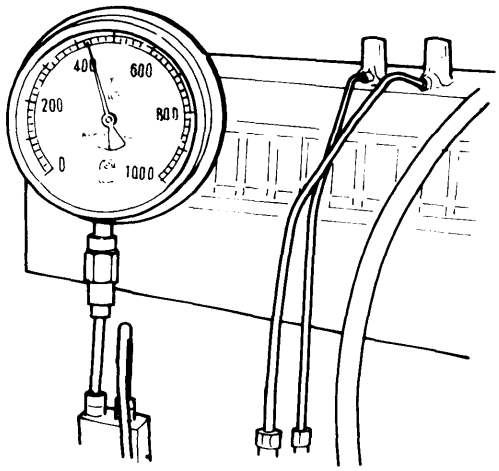

(1) Install a 1,000 kg/cm² (14,223 lb/in.²) pressure gauge on the delivery valve holder.
(2) Check that there is no oil leaking from the delivery valve holder and high pressure pipe mountings, and that the pressure does not drop suddenly when raised to 500 kg/cm² (7,112 lb/in.²) or higher.
Pressure gauge AVT 1/2 × 150 × 1,000 kg/cm².

2-8.6 Measuring the fuel injection volume

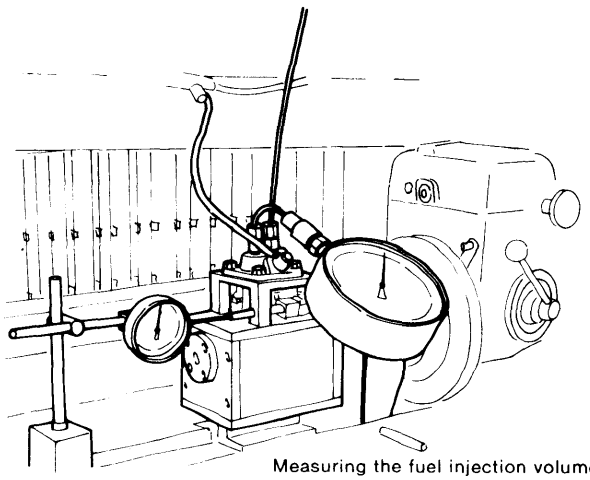

Measuring the fuel injection volume

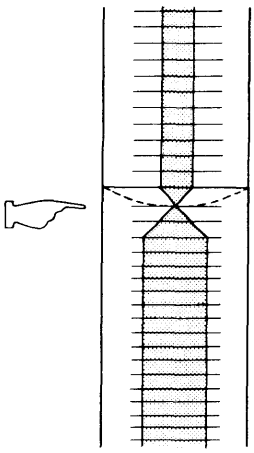

Measuring the degree

(1) Set the fuel pump camshaft speed.
(2) Check the injection nozzle.

Camshaft speed	1400 rpm
Plunger diameter × stroke	ø7 × 7mm (0.2756 × 0.2756in.)
Rack mark injection volume	31.5 cc/1000st.
Allowable error between cylinders	±0.5 cc/1000st.
Nozzle	YDN-OSDYD1
Injection pressure	160kg/cm² (2276 lb/in.²)

(3) Lock the control rack at the position which No. 1 cylinder pump conforms to the above table, and adjust the other pump(s) to the prescribed injection volume by sliding the control sleeve (B) and pinion.
The control sleeve (B) and pinion can be slided by loosening the control sleeve set screw.
After adjustment, securely retighten the control sleeve set screw.

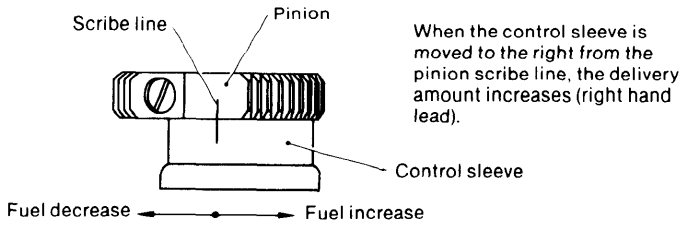

(4) The injection volumes of each cylinders must be adjusted to within 3% of each other.

$$\text{Average injection volume} = \frac{\text{total volume of all cylinder injection}}{\text{number of cylinders}}$$

$$\text{Difference} = \frac{\text{Maximum injection volume} - \text{average injection volume}}{\text{Average injection volume}} \times 100$$

When the difference exceeds 3%, adjust the injection volume by sliding the control sleeve and pinion, when the difference exceeds 3%, the engine output will drop and/or one cylinder will overheat.

3. Injection Valve

3-1 Construction

The injection valve atomizes the fuel sent from the injection pump and injects it into the precombustion chamber in the prescribed injection pattern to obtain good combustion through optimum fuel/air mixing.
The main parts of the injection valve are the valve holder and valve body. Since both these parts are exposed to hot combustion gas, they must be extremely durable. Moreover, since they are operated sensitively and smoothly by the pressure of the fuel, high precision is required. Both are made of quality alloy steel that has been specially heat treated and lapped, so they must always be handled as a pair.

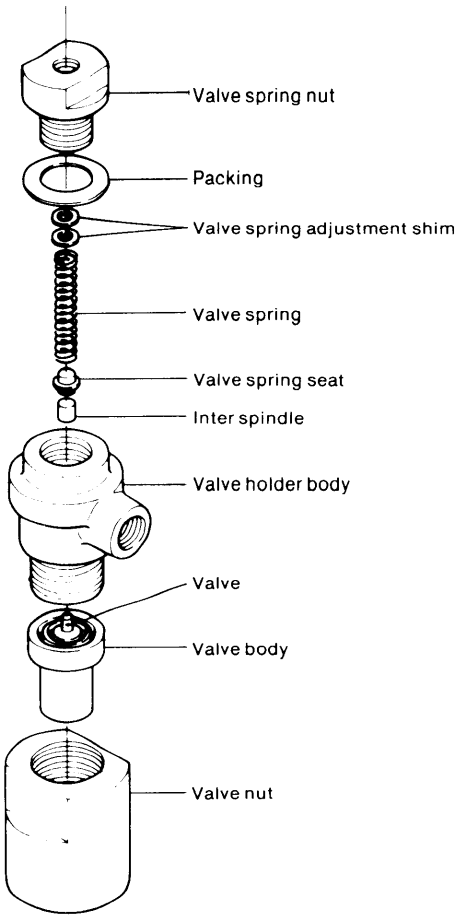

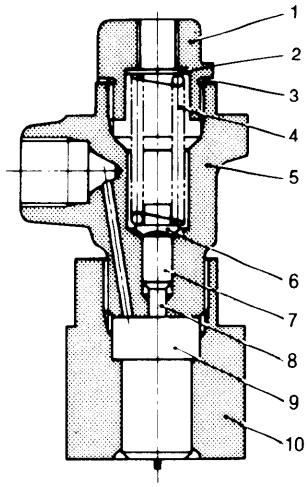

1. Valve spring nut
2. Valve spring adjestment shim
3. Packing
4. Valve spring
5. Valve holder body
6. Valve spring seat
7. Inter spindle
8. Valve
9. Valve body
10. Valve nut

3-2 Yanmar throttle valve

The semi-throttle valves used in this engine are designed and manufactured by Yanmar. A semi-throttle valve resembles a pintle valve, except that with the former the valve hole at the end of the valve and valve body is longer and the end of the valve is tapered. This valve features a "throttling effect": relatively less fuel is injected into the precombustion chamber at the initial stage of injection, and the volume is increased as the valve rises. This type of throttle valve ideal for small, high-speed engines.

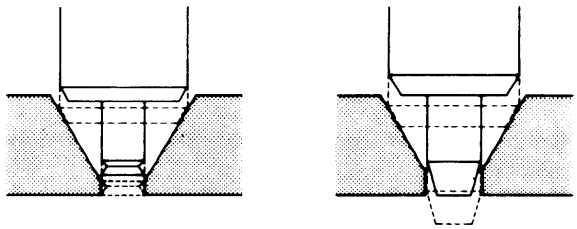

Pintle valve　　Yanmar semi-throttle valve

3-3 Valve operation

The valve is pushed down to its lowest position by the pressure-adjusting valve spring and touches the valve seat of the valve body.
Under high pressure, fuel from the fuel pump passes through the hole drilled in the valve holder, enters the circular groove at the end of the valve body and then enters the pressure chamber at the bottom of the valve body.
When the force acting in the axial direction on the differential area of the valve at the pressure chamber overcomes the force of the spring, the valve is pushed up and the fuel in injected into the precombustion chamber through the throttle hole.
The valve is closed again when the pressure in the valve body's pressure chamber drops below the force of the spring.
This cycle is repeated at each opening and closing of the injection pump delivery valve.

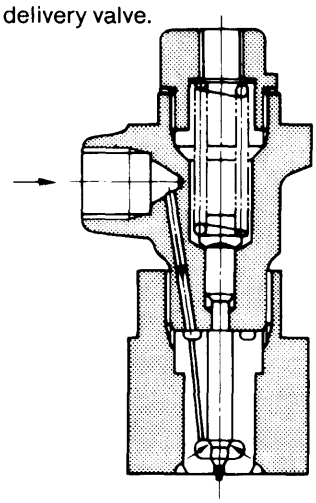

3-4 Disassembly and reassembly

3-4.1 Disassembly sequence

(1) Remove the carbon from the valve end.
(2) Loosen the valve spring holder.
(3) Remove the valve holder body from the valve mounting nut.

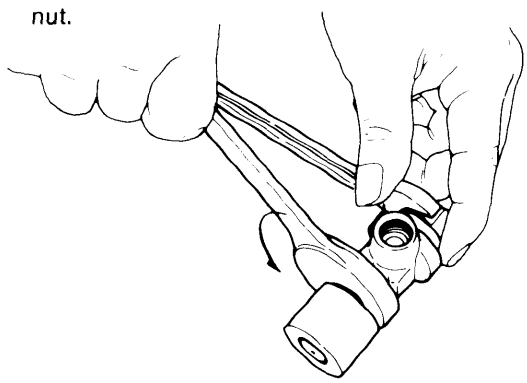

(4) Remove the valve body and valve ass'y from the valve mounting nut.
(5) Remove the valve spring retainer from the valve holder body, and remove the valve spring retainer, inter-spindle etc.

Reassemble in the reverse order of disassembly, paying special attention to the following items.

3-4.2 Disassembly and reassembly precautions

(1) The disassembled parts must be washed in fuel oil, and carbon must be completely removed from the end of the valve body, the valve body and the valve mounting nut fitting section.
If reassembled with any carbon remaining, the valve will not tighten evenly, causing faulty injection.

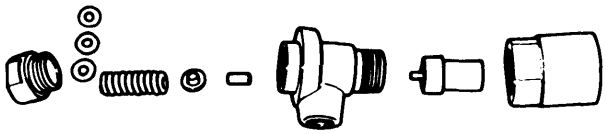

(2) Parts for each cylinders must be kept separate.
The valve body and valve must always be handled as a pair.
(3) Precautions when using a new valve
First immerse the new valve in rust-preventive oil, and then seal it on the outside with seal peel. After removing the seal peel, immerse the valve in diesel oil and remove the rust-preventive oil from both the inside and outside of the valve.
Stand the valve holder upright, lift the valve about 1/3 of its length: it should drop smoothly by it own weight when released.

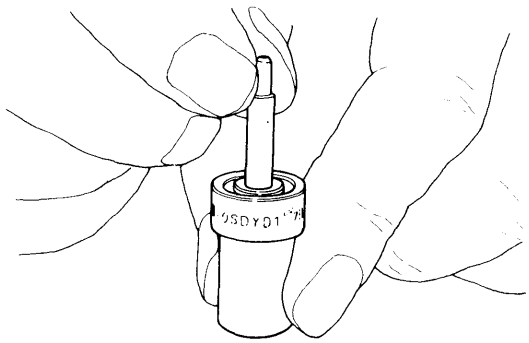

(4) The valve must be assembled on the valve holder with the valve spring retainer loosened.
If the valve is installed with the valve spring tightened, the valve mounting nut will be tightened unevenly and oil will leak from between the end of the valve holder body and the end of the valve mounting nut, causing faulty injection.

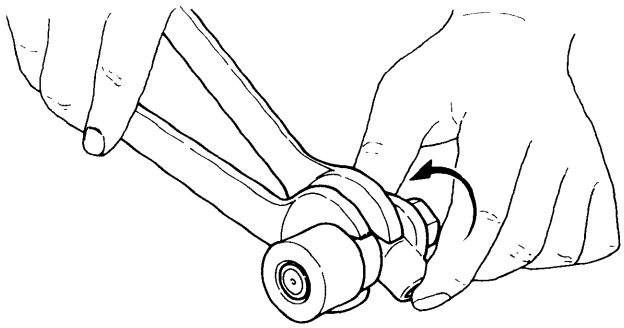

(5) When installing the injection valve on the cylinder head, tighten the valve holder nuts alternately, being careful to tighten them evenly. Tightening torque: 2 kg-m (14.5 ft-lb)
Moreover, the valve holder must be installed with the notch side on the valve side.

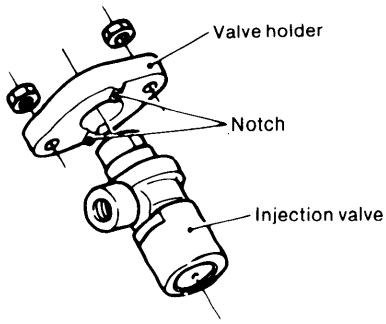

3-5 Injection valve inspection and adjustment

3-5.1 Carbon and corrosion on the valve body

Inspect the end and sides of the valve body for cabon build-up and corrosion. If there is considerable carbon build-up, check the properties of the fuel used, etc.
Replace the body if heavily corroded.

3-5.2 Checking valve action

Wash the valve in clean fuel oil and hold the valve body upright, then lift the valve about 1/3 of its length with one hand. The valve is in good condition if it drops smoothly by its own weight when released. If the valve slides stiffly, repair or replace it.

3-5.3 Adjusting the valve injection pressure

Install the injection valve on the high pressure pipe of a valve tester and slowly operate the lever of the tester. Read the pressure the instant injection from the valve begins.
If the injection pressure is lower than the prescribed pressure, remove the valve spring holder and adjust the pressure by adding valve spring shims.
The injection pressure increases about 10 kg/cm² (142.2 lb/in.²) when a 0.1 mm (0.004in.) shim is added.

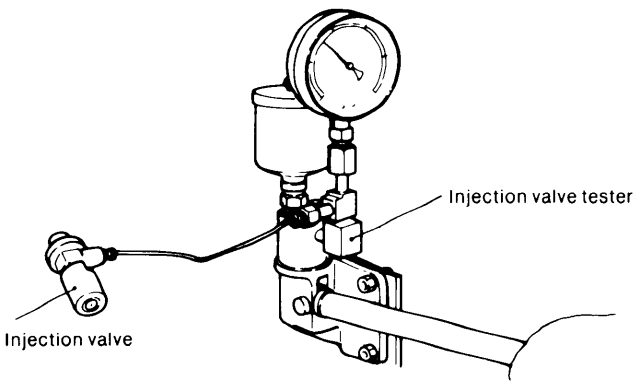

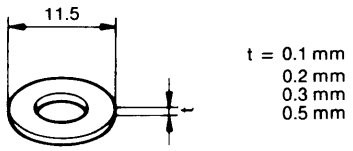

Injection pressure	160 ±5 kg/cm² (2205 ~ 2347 lb/in.²)

3-5.4 Valve seat oil tightness check

After injecting fuel several times by operating the lever of the valve tester, wipe the oil off the injection port. Then raise the pressure to 140 kg/cm² (1,992 lb/in.²) (which is lower than the prescribed injection pressure by 20 kg/cm² (284.5 lb/in.²).
The valve is faulty if oil drips from the valve. In this case, clean, repair or replace the nozzle.

3-5.5 Checking the spray condition

Adjust the injection pressure of the valve to 160 kg/cm² (2,276 lb/in.²), and check the condition of the spray while operating the tester at 4—6 times/sec. Judge the condition of the spray by referring to the below figure.

Normal

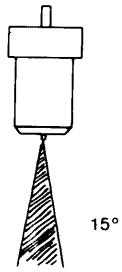

Stream

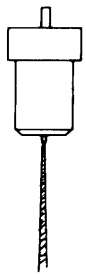

- Injection pressure low
- Valve seized
- Valve spring broken
- Dirt on valve seat

Spike

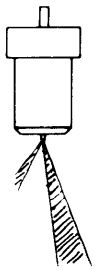

- Injection port damaged or dirty
- Carbon build-up
- Valve end abnormally worn

Spray

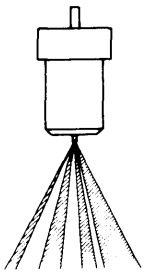

- Injection port worn
- Carbon build-up

Slanted

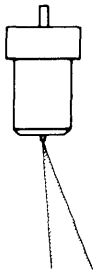

- Uneven seat contact
- Injection port damaged or worn
- Carbon build-up

3-5.6 Inspecting the valve spring

Inspect the valve spring for fractured coils, corrosion, and permanent strain, and replace the spring when faulty.

3-5.7 Inspecting the valve spring retainer and inter-spindle

Inspect the valve spring retainer and inter-spindle for wear and peeling of the contact face, and repair or replace the spring if faulty.

4. Fuel Filter

4-1 Construction

The fuel filter is installed between the feed pump and injection pump, and serves to remove dirt and impurities from the oil fed from the fuel tank through the feed pump.
The fuel filter incorporates a replaceable filter paper element. Fuel from the fuel tank enters the outside of the element and passes through the element under its own pressure. As it passes through, the dirt and impurities in the fuel are filtered out, allowing only clean fuel to enter the interior of the element. The fuel exits from the outlet at the top center of the filter and is sent to the injection pump.
A hexagonal head bolt for air bleeding and a threaded hole for fuel return are provided in the fuel filter body. The surplus fuel at the injection nozzle is returned to the fuel filter and then to the injection pump.

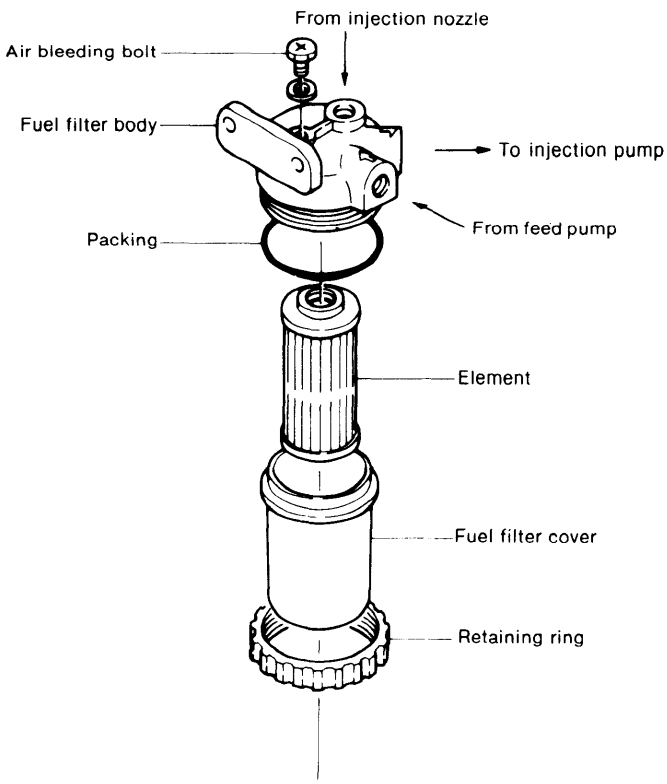

4-2 Inspection

The fuel filter must be periodically inspected. if there is water and sediment in the filter, remove all dirt, rust, etc. by washing the filter with clean fuel.
The normal replacement interval for the element is 100 hours, but the element should be replaced whenever it is dirty or damaged, even if the 100-hour replacement period has not elapsed.

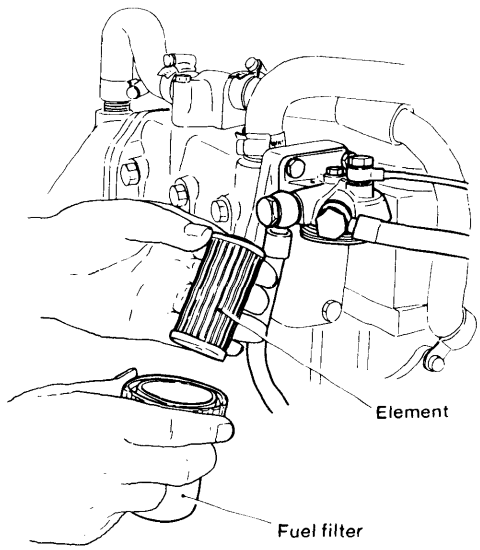

Filter cleaning	Every 50 hours
Filter element replacement	Every 100 hours

5. Fuel Feed Pump

5-1 Construction

The fuel pump feeds the fuel from the fuel tank to the injection pump through the fuel filter. When the fuel tank is installed at a higher position than the fuel filter and injection pump, the fuel will be fed by its head pressure, but if the fuel tank is lower than the filter and injection pump, a fuel pump is required.

The fuel pump of this engine is a diaphragm type and is installed on the gear case side of the cylinder body. The diaphragm is operated by the movement of a lever by the fuel feed pump cam at the P.T.O. shaft.

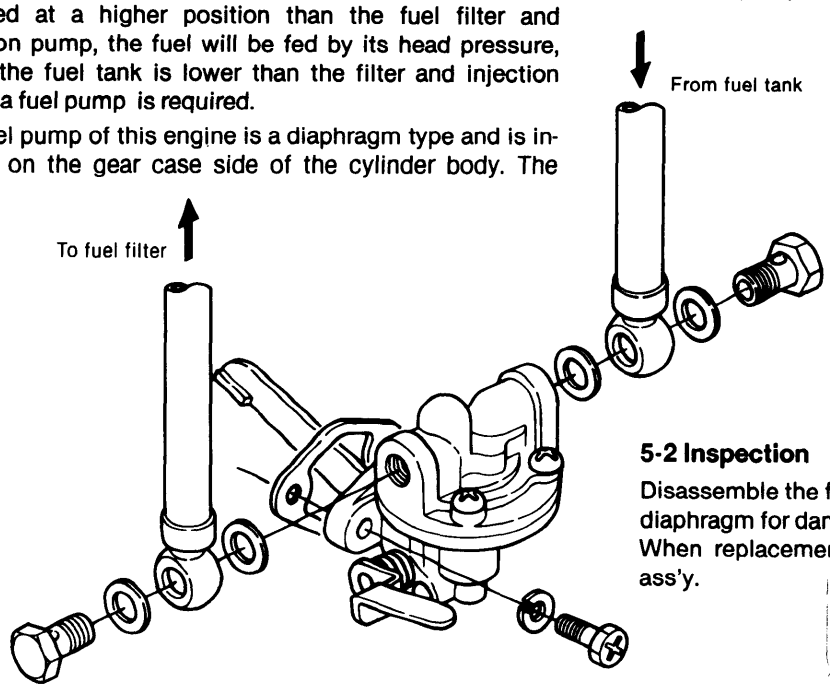

5-2 Inspection

Disassemble the fuel pump body and cover and inspect the diaphragm for damage.
When replacement is necessary, replace the fuel pump ass'y.

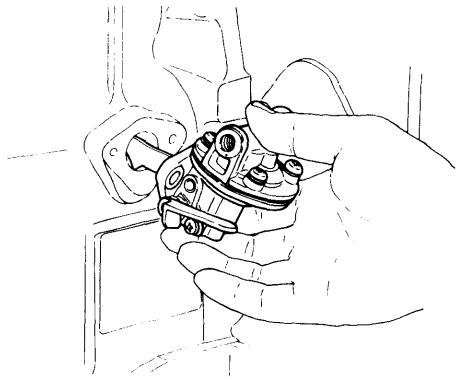

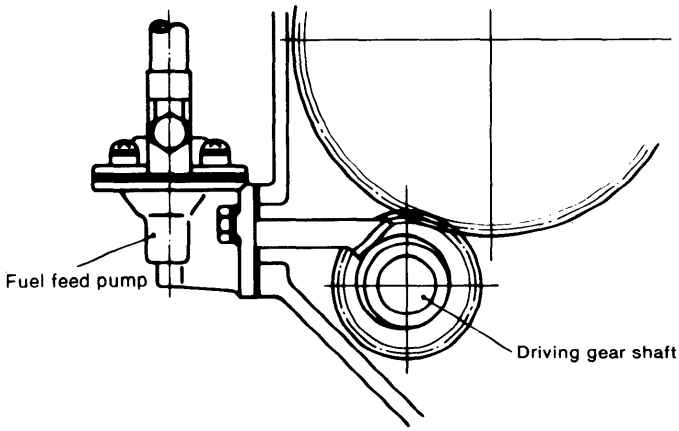

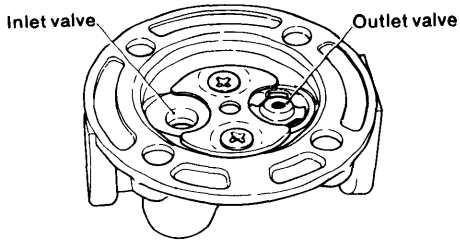

Suction head	Max. 0.7m
Capacity	1 cc/1 rotation = 1ℓ/min. at 1000 rpm of crankshaft

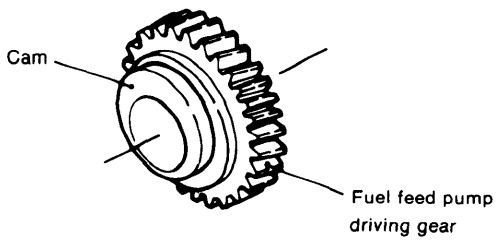

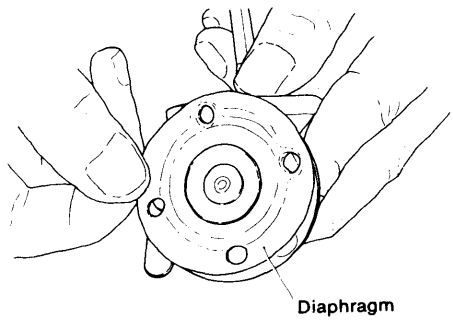

6. Fuel Tank (Option)

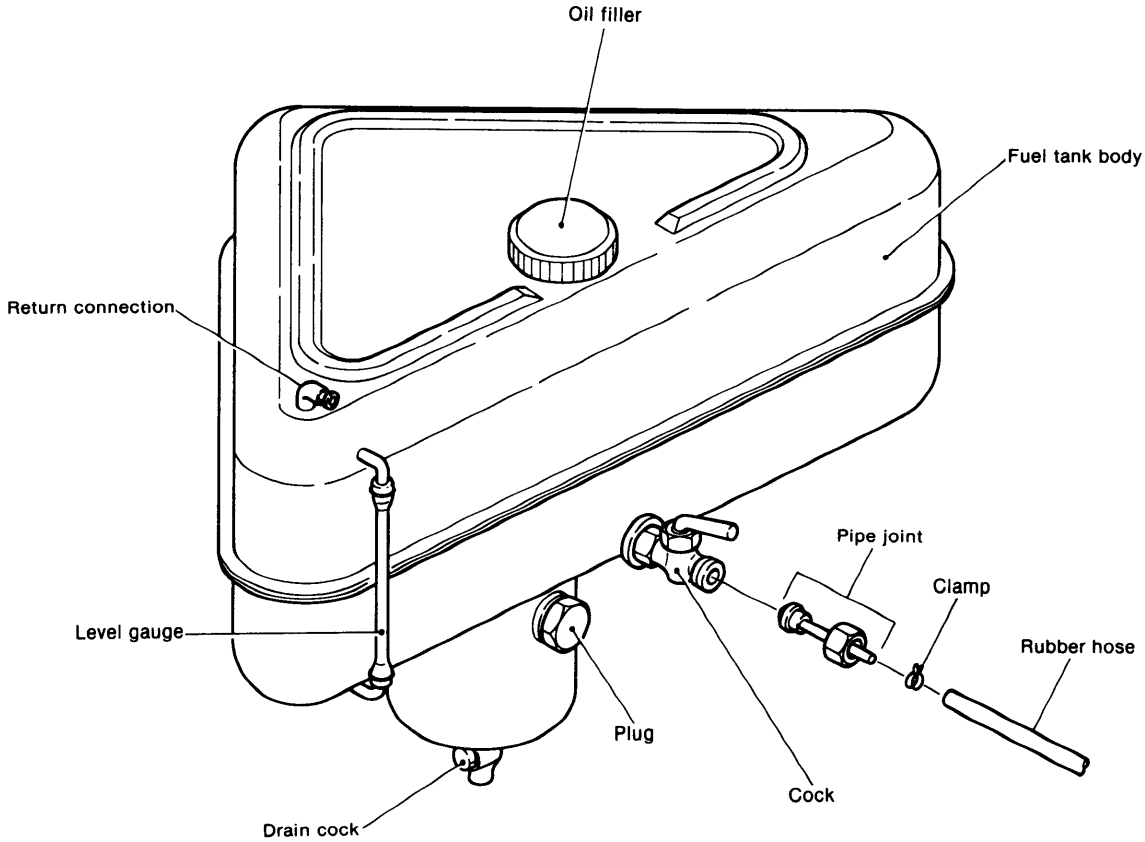

Material	Steel plate
Capacity	30ℓ
Thread of outlet cock	PF 1/2
Size of rubber hose	ø7/ø13 × 2000 mm (0.2756/0.5118 × 78.74in.)

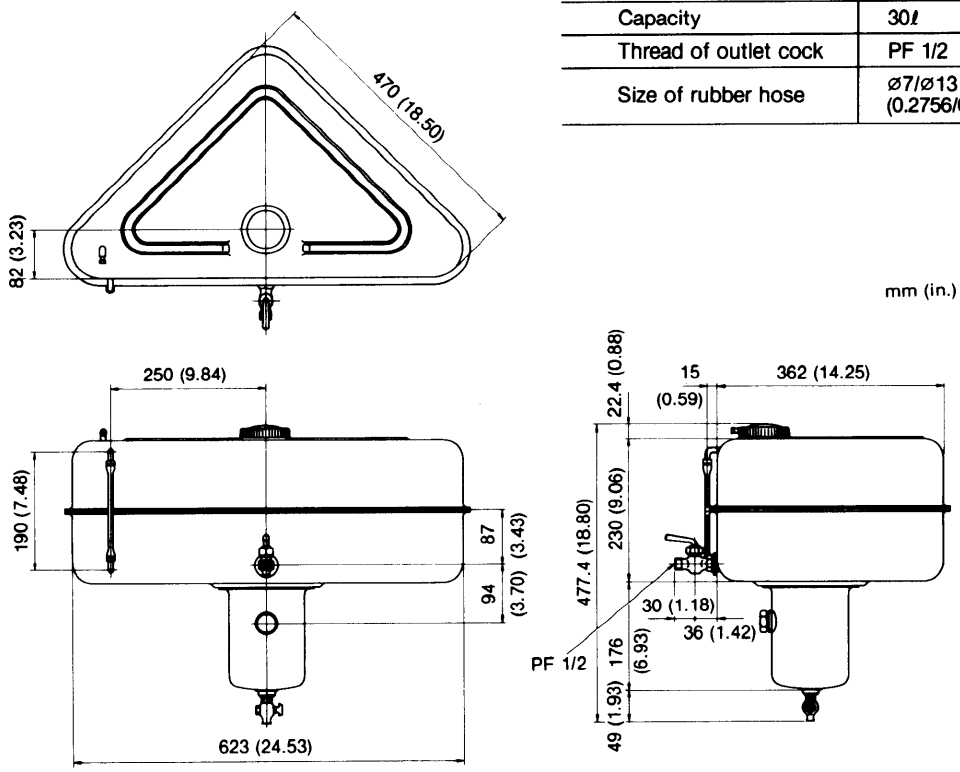

CHAPTER 4

GOVERNOR

1. Governor 4-1
2. Injection Limiter 4-5
3. No-Load Maximum Speed Limiter 4-7
4. Idling Adjuster 4-8

1. Governor

The governor serves to keep engine speed constant by automatically adjusting the amount of fuel supplied to the engine according to changes in the load. This protects the engine against sudden changes in the load, such as sudden disengagement of the clutch, the propeller leaving the water in rough weather, or other cases where the engine is suddenly accelerated.

This engine employs an all-speed governor in which the centrifugal force of the governor weight, produced by rotation of the crankshaft, and the load of the regulator spring are balanced.
The governor is remotely controlled by a wire. Refer to the "Control System" chapter for details.

1-1 Construction

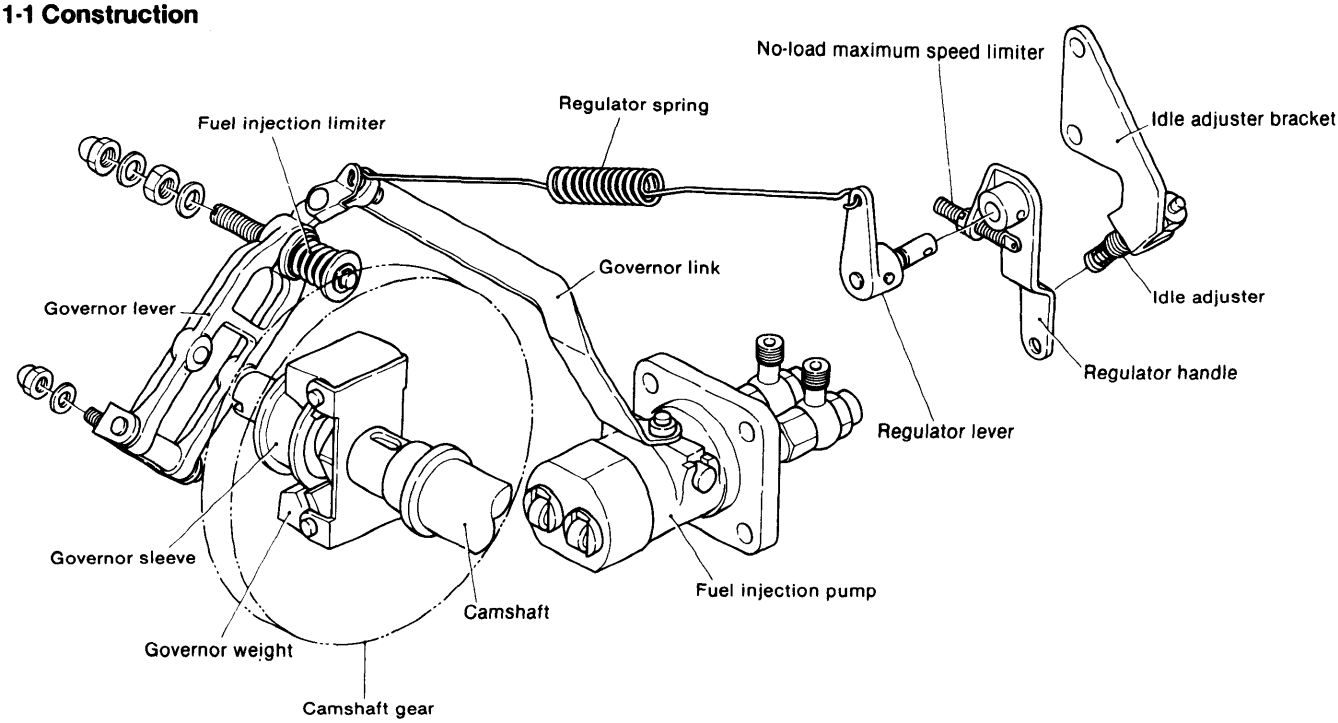

Engine stop device (2QM20(H) 3QM30(H))

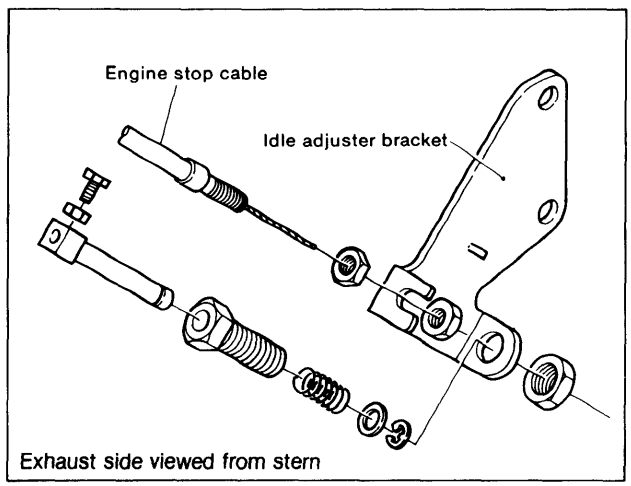

NOTE: Only the governor link of 3QM30(H) is different from of 2QM20(H).
The other parts of governor system are same.

2QM20(H)

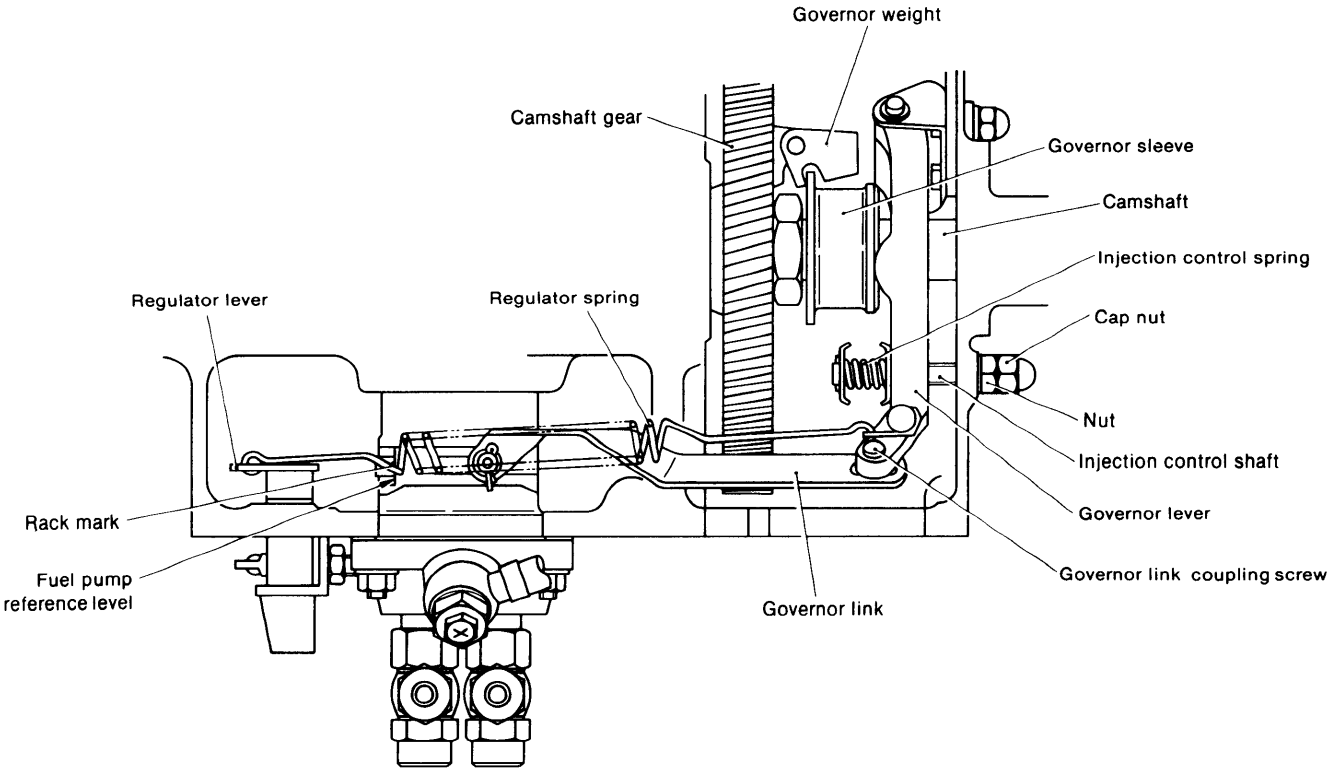

3QM30(H)

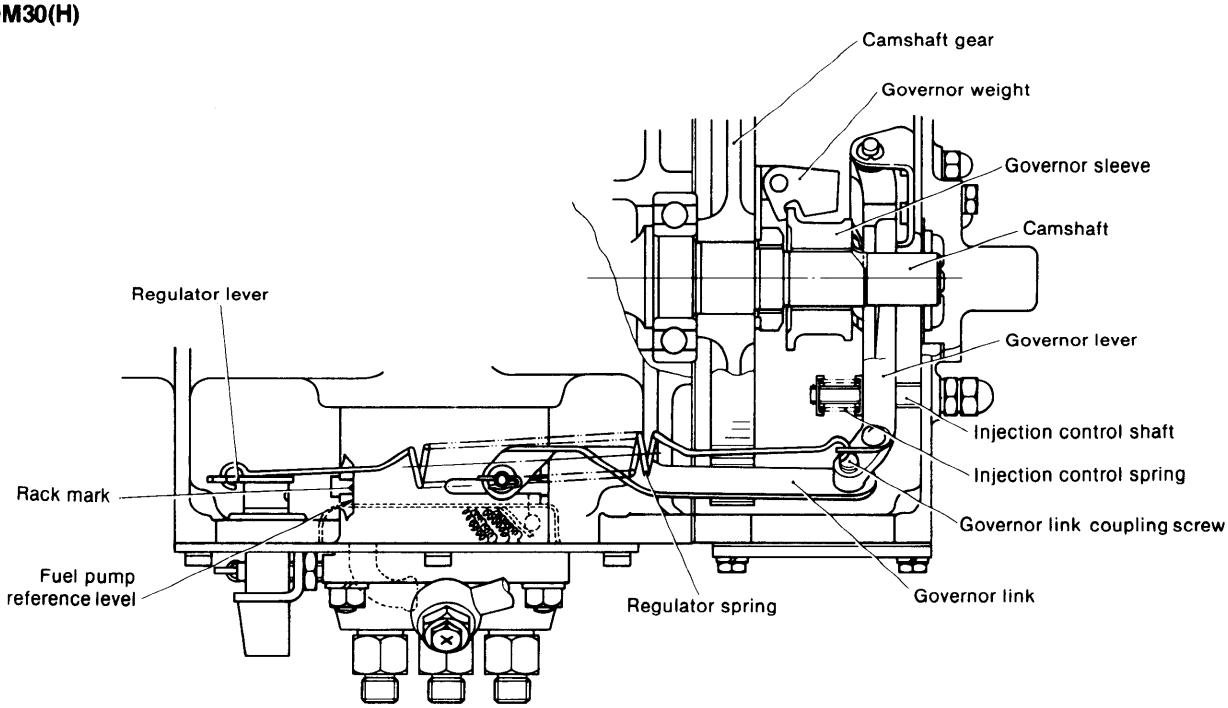

1-2 Operation

The position of the two governor weights (open and closed) is regulated by the speed of the engine. The centrifugal force of the governor weights pivots around the governor weight pin and is changed to axial force that acts on the sleeve. This force is transmitted to the governor lever and the lever shifts the fuel control rack to increase or decrease the fuel supply. The governor lever is stabilized at the point at which the force produced by the governor weight is balanced with the load of the regulator spring connecting the regulator lever and governor lever.
When the speed is reduced by application of a load, the force of the regulator spring pushes the governor sleeve in the "fuel increase" direction, stabilizing the engine speed by changing the position of the regulator lever.

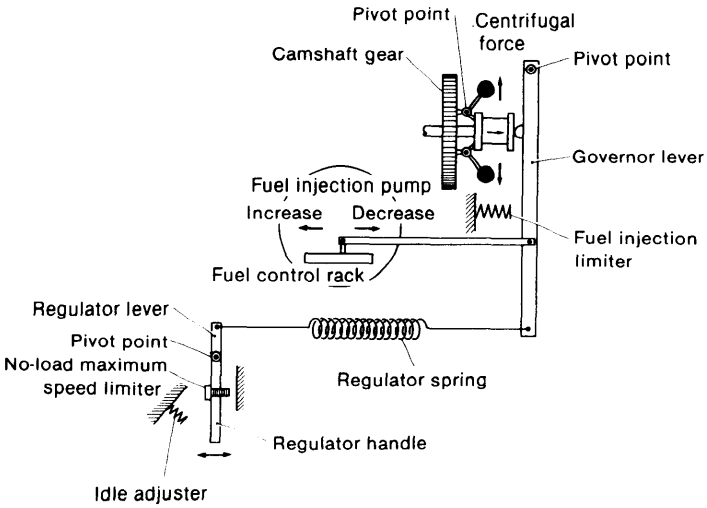

1-3 Performance

No-load maximum speed	3050 ±50 rpm
No-load minimum speed	650^{+50}_{0} rpm

1-4 Disassembly and Reassembly

1-4.1 Disassembly

(1) Remove the fuel injection pump box cover.
(2) Remove the tachometer driving gear case or the tachometer blind cover.
(3) Remove the regulator spring from the regulator lever and governor lever.

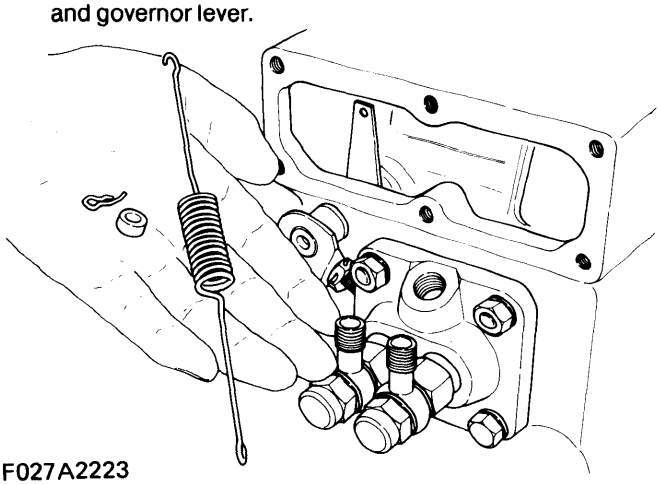

F027A2223

NOTE: Be carefully not to damage the spring.

(4) Remove the governor link from fuel injection pump and governor lever.
(5) Remove the timing gear box.

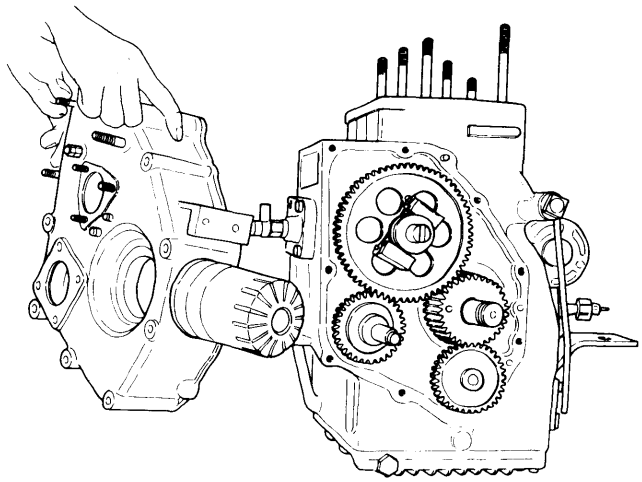

(6) Remove the fuel injection limiter from the timing gear box.
(7) Remove the governor lever from the timing gear box.
(8) Pull the governor sleeve from camshaft.

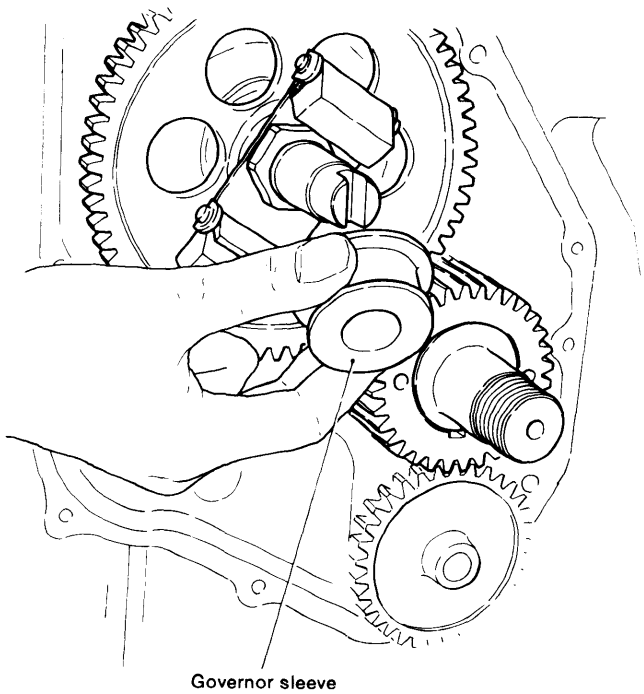

(9) Loosen the end nut of camshaft, and remove the governor support assembly.
(10) Pull the taper pin and remove the regulator lever and the regulator handle.

1-4.2 Reassembly and precautions

Reassemble in the reverse order of disassembly, paying special attention to the folowing items.

(1) Check the governor weight movement.
(2) Check the governor lever, when reassembling.
(3) Check for the movement of the governor sleeve sliding on the camshaft.
(4) Check the movement of the fuel injection rack when governor link is connected.

1-5 Parts inspection and repacement

1-5.1 Regulator spring

(1) Inspect the spring for coil damage, corrosion and hook deformation, and replace if faulty.
(2) Measure the spring's dimensions and spring constant. Since the spring constant determines the governor's performance, it must be carefully checked

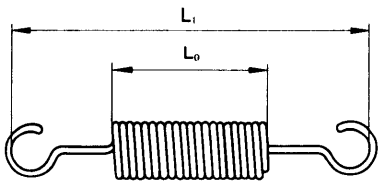

mm (in.)

Free length	L_0	40 (1.5748)
	L_1	244 (9.6065)

1-5.2 Sleeve

(1) Slide the sleeve on the governor shaft to check that it slides smoothly.
(2) Check the contact between the governor lever and governor weight, and inspect the roller for wear. Replace if faulty.

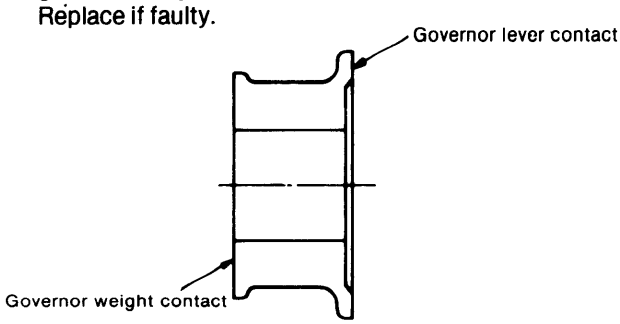

1-5.3 Governor weight

(1) Check contact with the sleeve and for wear.

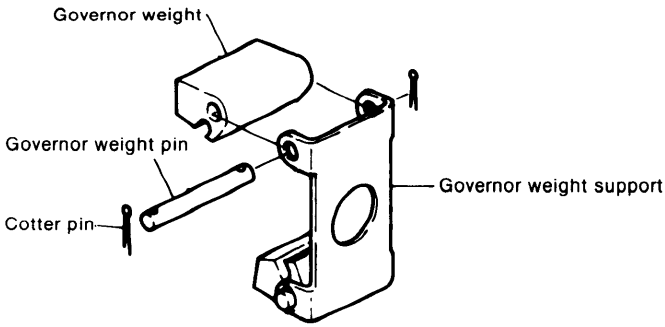

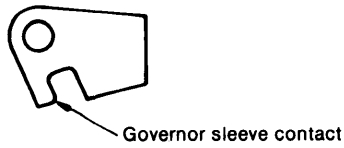

1-5.4 Governor lever shaft

(1) Replace the governor lever shaft if play between the lever and the support or the lever pin is found.
(2) Inspect the contact between the governor lever shaft and the governor sleeve, replace it if it is too damaged.

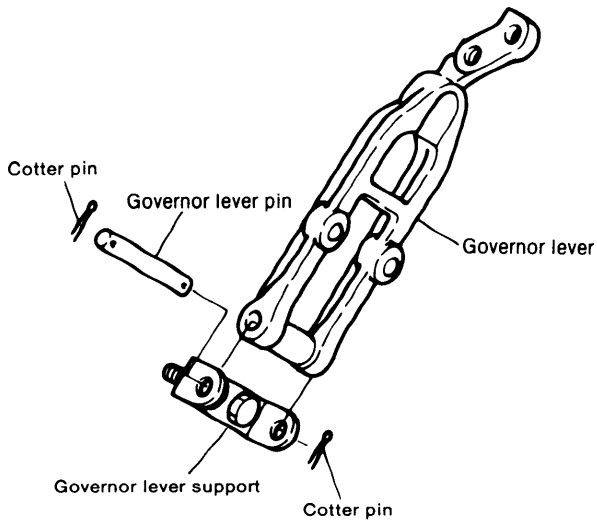

1-5.5 Regulator lever shaft and handle

(1) Check for play in the regulator lever, regulator handle and regulator handle shaft.
If faulty, replace them as a set.
(2) Check for O-ring damage. Replace if faulty.
(3) Replace the regulator lever if the regulator spring hole is too damaged.

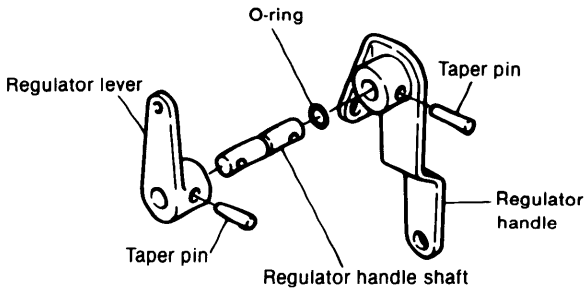

2. Injection Limiter

2-1 Construction

Since surplus power is required from the standpoints of sudden overloads and durability, the engine is equipped with an injection control shaft that limits the amount of fuel injected into the precombustion chamber to a fixed amount. Moreover, since the injection control spring (torque spring) affects engine performance by adjusting engine torque, Yanmar selected the best position for operating conditions.
Pay close attention when handling the sealed-wire.

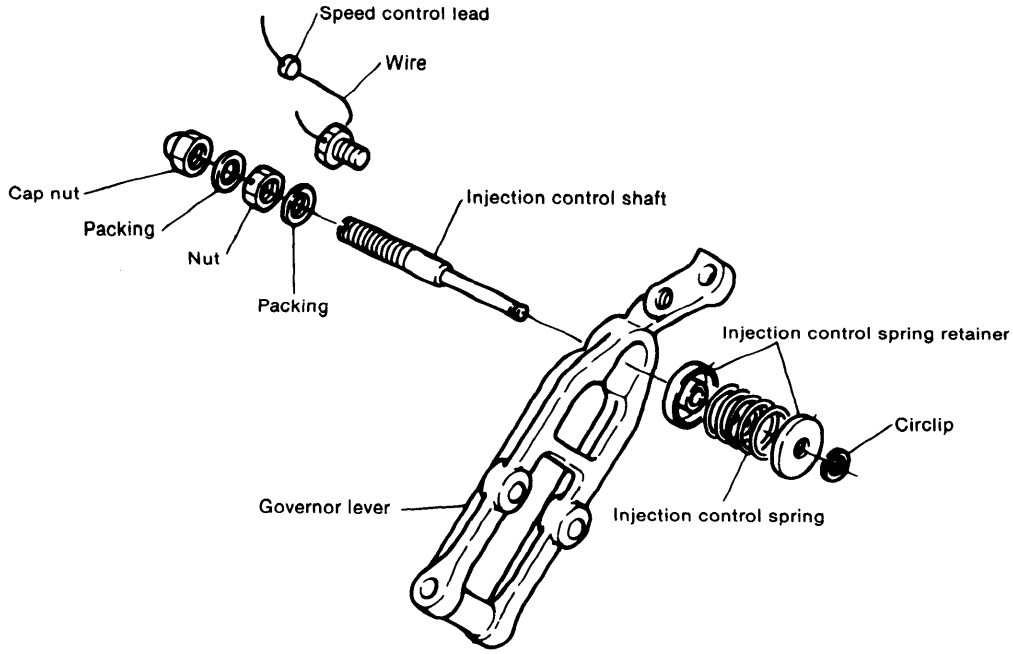

The point of contact of the governor lever and injection control spring will be the indicated output point, but during excessive load the spring will contract further and the amount of fuel injection increases.

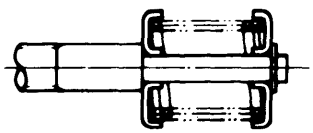

2-2 Inspection

(1) Inspect the contact between injection limiter spring retainer and governor lever for wear and damage.
(2) Check for smooth movement of the injection limiter spring retainer on the injection control shaft.
Replace if faulty.
(3) Replace the spring if it is damaged, corroded or permanently strained.

mm (in.)

	Maintenance standard	Wear limit
Free length	24.7 (0.9724)	23.2 (0.9134)

2-3 Adjustment

(1) When the injection limit shaft is not to be moved.
1) Remove the covers of the gear case side and fuel pump housing.
2) Loosen the governor coupling screw.
3) First push the governor lightly to the left, taking care not to press the injection limit spring, then set the rack mark to the fuel pump reference face by moving the governor link right and left. Tighten the coupling after adjustment.

(2) When the injection limit shaft is to be moved.
1) Remove the covers of the gear case side and fuel pump housing.
2) Replace the cap nuts for the injection control shaft and screw the control shaft into the engine side by loosening the hexagon lock nut (until the injection control spring is no longer touched even if the governor is pushed to the left).
3) Loosen the governor coupling screw and move the governor link to the left as much as possible by pressing the governor lever to the left (set to the maximum discharge).
4) Loosen the injection control shaft toward the outside and set the rack mark to the pump reference level.

5) Tighten the injection limit shaft with the lock nut and fit the cap nut (set to indicated output).
6) Fit the covers of the gear case side and the fuel pump housing.

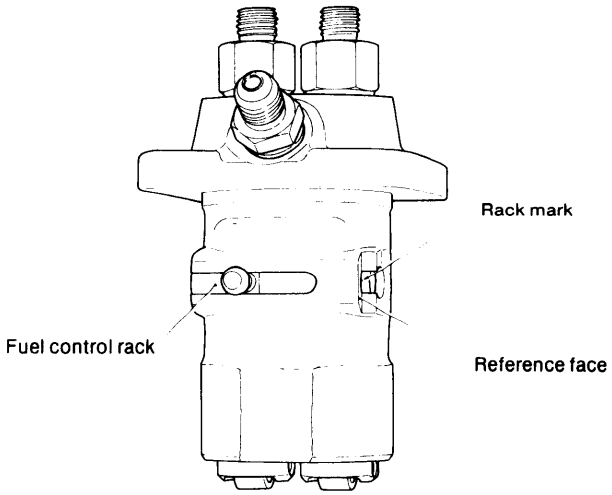

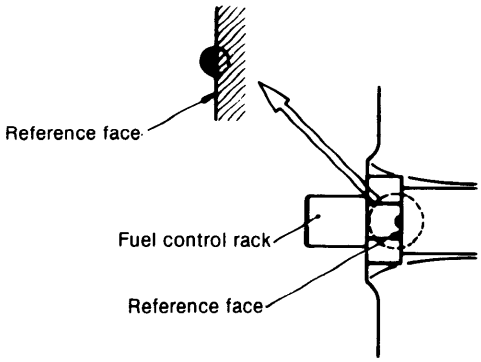

NOTE: Align the center mark of the rack with the reference face.

3. No-Load Maximum Speed Limiter

3-1 Construction

A stopper is installed on the regulator lever so that the engine speed at no-load does not exceed a fixed speed. The fuel control rack is stopped when the regulator lever contacts the stopper.

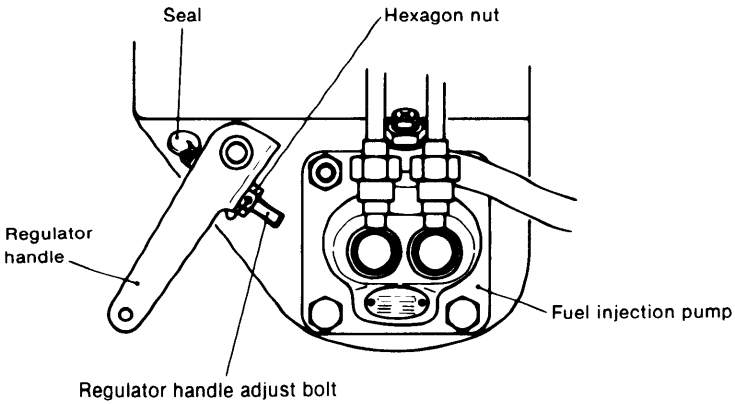

3-2 Handling precautions

The no-load maximum speed is adjusted during bench testing at the factory, and is locked with wire and sealed with lead. Care must be taken to keep the seal from being accidentally broken.

4. Idling Adjuster

When controlling the speed with the push-pull remote control, the idling adjustor operates so that the regulator handle does not move beyond the idling position in order to keep the engine running.

2QM20
3QM30

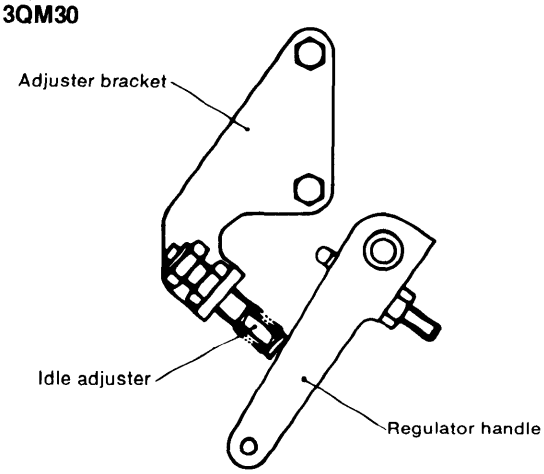

2QM20H
3QM30H

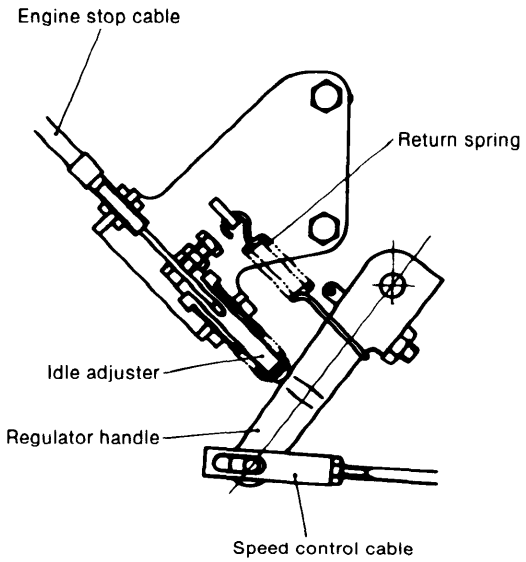

CHAPTER 5

INTAKE AND EXHAUST SYSTEM

1. Intake and Exhaust System 5-1
2. Intake Silencer 5-3
3. Exhaust System 5-4
4. Breather Pipe 5-5
5. Intake Manifold [3QM30(H)] 5-6

1. Intake and Exhaust System

1-1 2QM20(H)

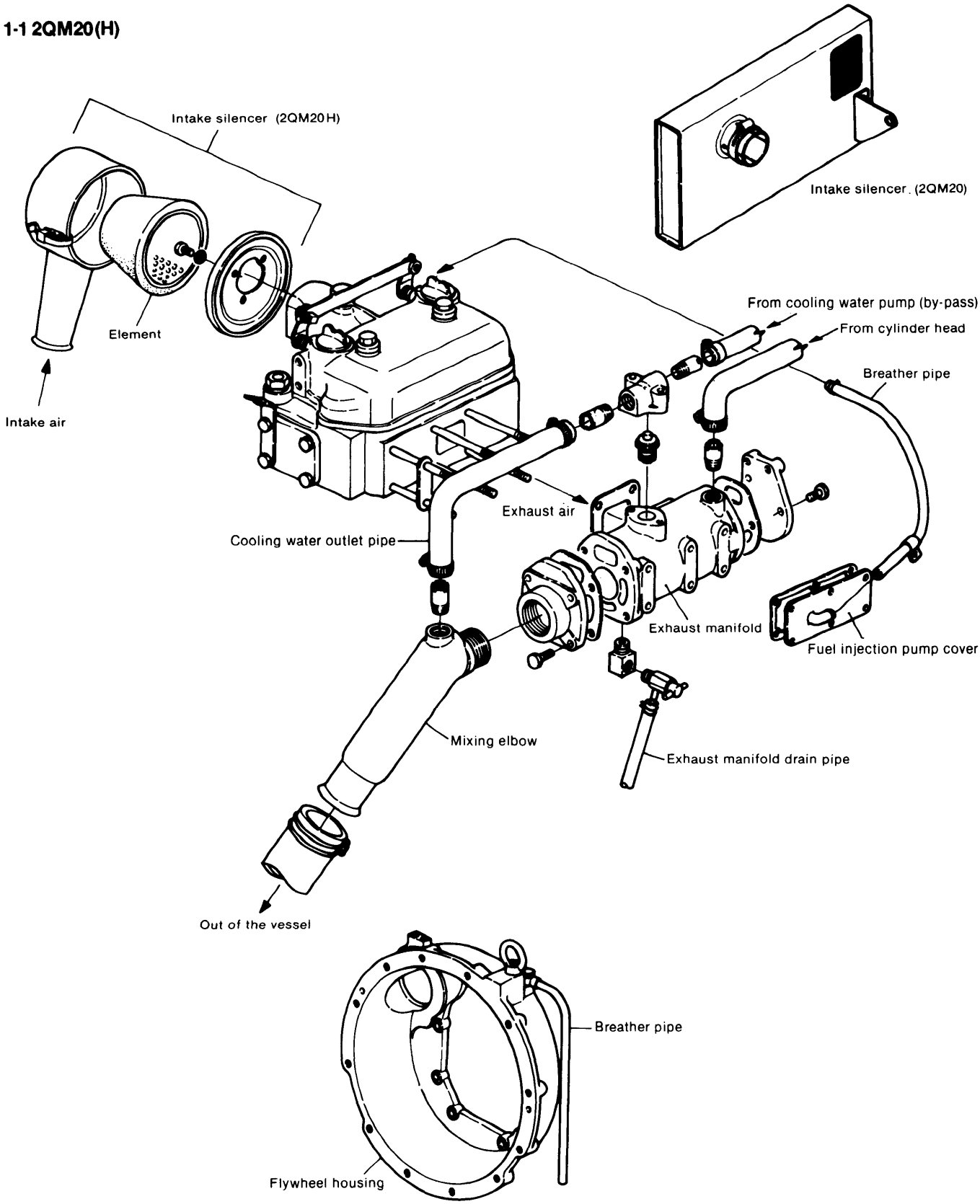

1-2 3QM30(H)

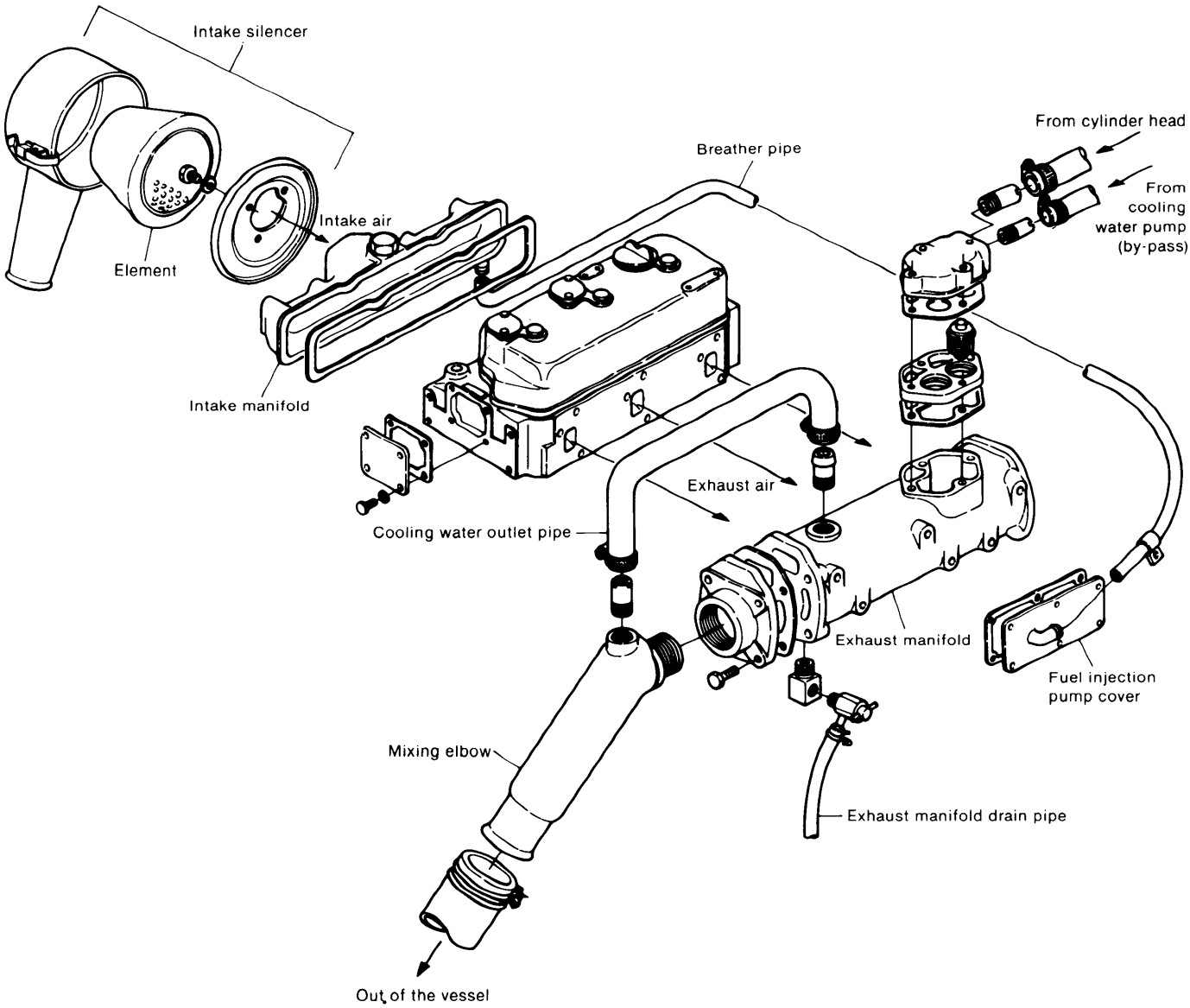
Intake silencer
Element
Intake air
Intake manifold
Breather pipe
From cylinder head
From cooling water pump (by-pass)
Exhaust air
Cooling water outlet pipe
Exhaust manifold
Fuel injection pump cover
Mixing elbow
Exhaust manifold drain pipe
Out of the vessel

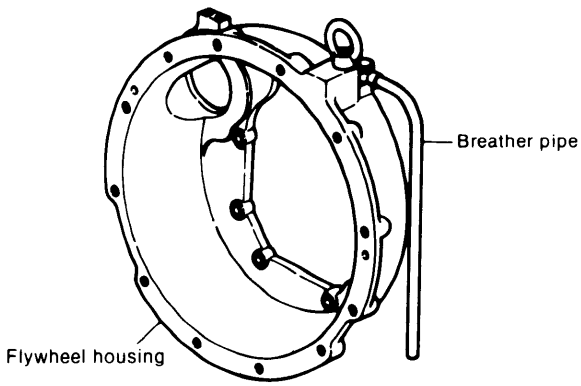
Breather pipe
Flywheel housing

2. Intake Silencer

2-1 Construction

A round polyurethane sound absorbing type intake silencer is employed to silence the intake air sucked into the cylinder head from the intake port.
Besides providing a silencing effect, the silencer also acts as an air cleaner.

2-2 Inspection of the intake silencer

Occasionally, disassemble the intake silencer, remove the polyurethane element and inspect it. Because the element filters the air, if it is used over a long period of time it will become clogged and this decreases the amount of intake air, and may also be the cause for decreased output.

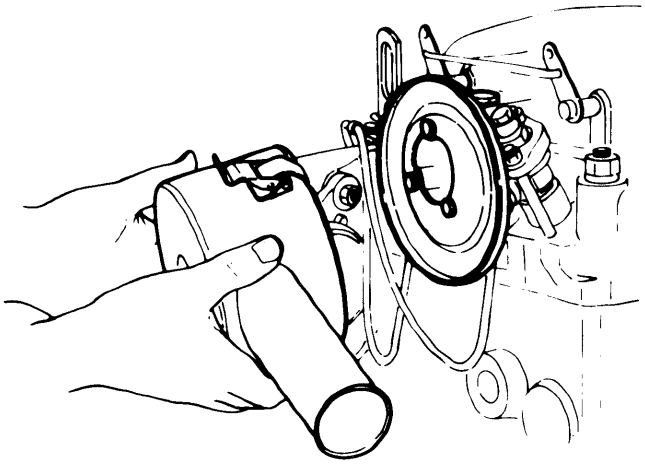

2-3 Washing the intake silencer element

Wash the element inside the air intake silencer with a neutral detergent.

Washing period	Every 100 hours

3. Exhaust System

3-1 Exhaust manifold and mixing elbow

The high temperature, high pressure exhaust gas emitted intermittently from the cylinders at the speed of sound enters the exhaust manifold where it is muffled by expansion and water cooling. It is then mixed with the cooling water at the mixing elbow to lower its temperature and muffle it further, and is discharged.
A water-cooled exhaust manifold is employed for a high muffling effect.

3-2 Exhaust manifold inspection

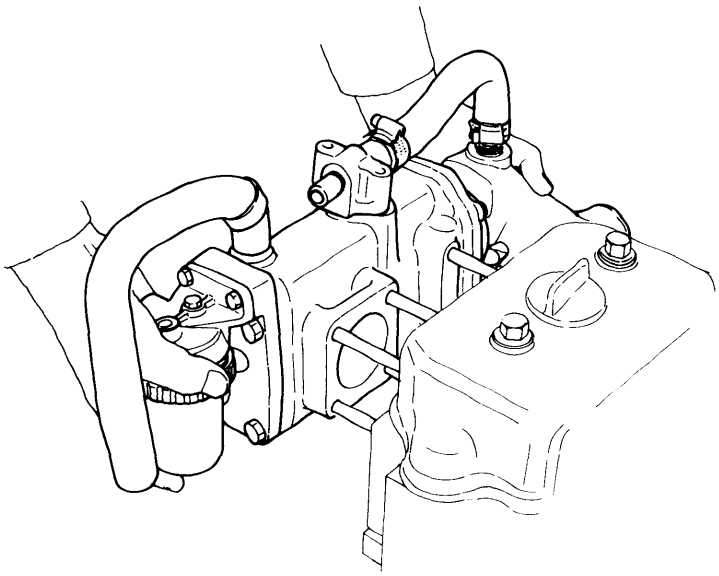

(1) Gasket packing
Inspect the gasket packing and replace if damaged.
(2) Carbon build-up in the exhaust passage
Remove the exhaust manifold elbow and cover and check carbon build-up in the exhaust passage. Remove any carbon in the passage. If carbon build-up becomes heavy, the exhaust pressure will rise, causing overheating of the cylinders and difficult starting.
(3) Corrosion and scale at the cooling water jacket
Inspect the water passage for the build-up of scale and foreign matter and remove if found. Also check for corrosion of the anticorrosion zinc installed on the cylinder head and the cylinder head water jacket and replace if corrosion is severe. Moreover, replace the cylinder head if it has been cracked by local overheating.
(4) Drain cock
Inspect the drain cock for clogging and check its action. Repair or replace if faulty.

3-3 Mixing elbow inspection

Check for carbon build-up and for corrosion inside the pipe, and repair or replace the pipe if faulty.
Moreover, inspect the mixing elbow mounting threads for cracking and corrosion.
This section is affected by exhaust gas and vibration.

NOTE: The part where high temperature gas and cooling water are mixed is especially likely to corrode, so it must be inspected with special care.

4. Breather Pipe

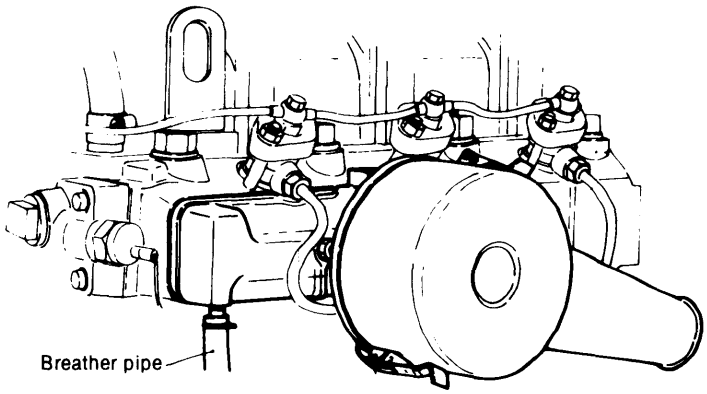

Engine blow-by gas is sent by hose from the injection pump adjusting cover to the intake port where it is sucked into the precombustion chamber with the intake air.
Since this blow-by gas is not exhausted, the engine room remains clean.

5. Intake Manifold [3QM30(H)]

The intake manifold is equipped with the cylinder head. The intake air is entered into the cylinder head through the intake manifold. The breather pipe joint is on the underside of the intake manifold, and is constructed to take in mist.

5-1 Inspection of the intake manifold

(1) Inspect the intake manifold packing and replace it if there are scratches.
(2) Inspect for clogging in the breather pipe joint and repair it.

CHAPTER 6

LUBRICATION SYSTEM

1. Lubrication System 6-1
2. Oil Pump 6-6
3. Oil Filter 6-9
4. Oil Pressure Regulator Valve 6-10
5. Oil Pressure Measurement 6-11

1. Lubrication System

Engine parts are lubricated by a trochoid pump forced lubrication system. To keep the engine exterior uncluttered and to eliminate vibration damage to piping, exterior piping has been minimized by transporting the lubricating oil through passages drilled in the cylinders and cylinder head. The lubricating oil supplied from the oil filler in the rocker arm cover is collected in the oil pan at the bottom of the cylinder block through the tappet holes.

The lubricating oil is drawn back up through the lubricating oil suction pipe by the trochoid pump and fed to the oil filter, where impurities are filtered out. Then it is adjusted to the prescribed pressure by the oil pressure regulating valve and sent to the main bearing through an oil pipe. The lubricating oil sent to the gear side main bearing flows in two paths: one from the main bearing to lubricate the crank pin through the hole drilled through the crankshaft, and the other to the jet piece to lubricate the gears.

The lubricating oil sent to the flywheel side main bearing also flows in two paths: one from the main bearing to lubricate the crank pin through the hole drilled through the crankshaft, and the other to the rocker arm shaft through the hole drilled through the cylinders and cylinder head.

From the rocker arm shaft, the lubricating oil flows through the small hole in the rocker arm to lubricate the push rods and part of the valve head.

The oil that has dropped to the push rod chamber from the rocker arm chamber lubricates the tappets, cam and cam bearing, and returns to the oil pan.

The pistons, piston pins and contact faces of the cylinder liners are splash lubricated by the oil that has lubricated the crank pin. Moreover, an oil pressure switch is provided in the lubricating system to monitor normal circulation and pressure of the lubricating oil. When the lubricating oil pressure drops 0.5kg/cm^2 (7.114 lb/in.^{2}), the oil pressure switch illuminates the oil pressure lamp on the instrument panel to notify the operator.

1-1 2QM20(H)

1-1.1 Lubricating oil system

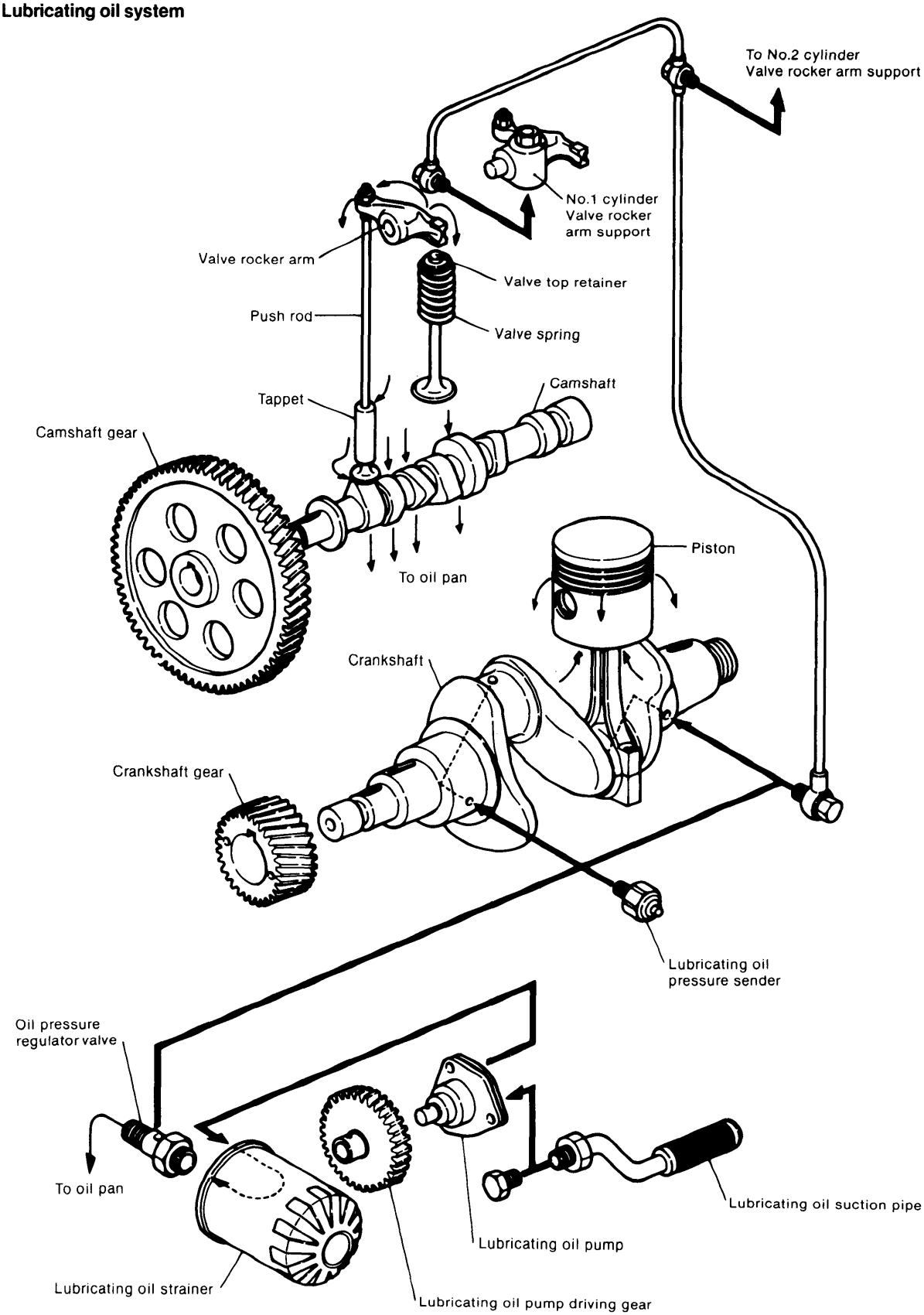

1-1.2 Lubricating oil diagram

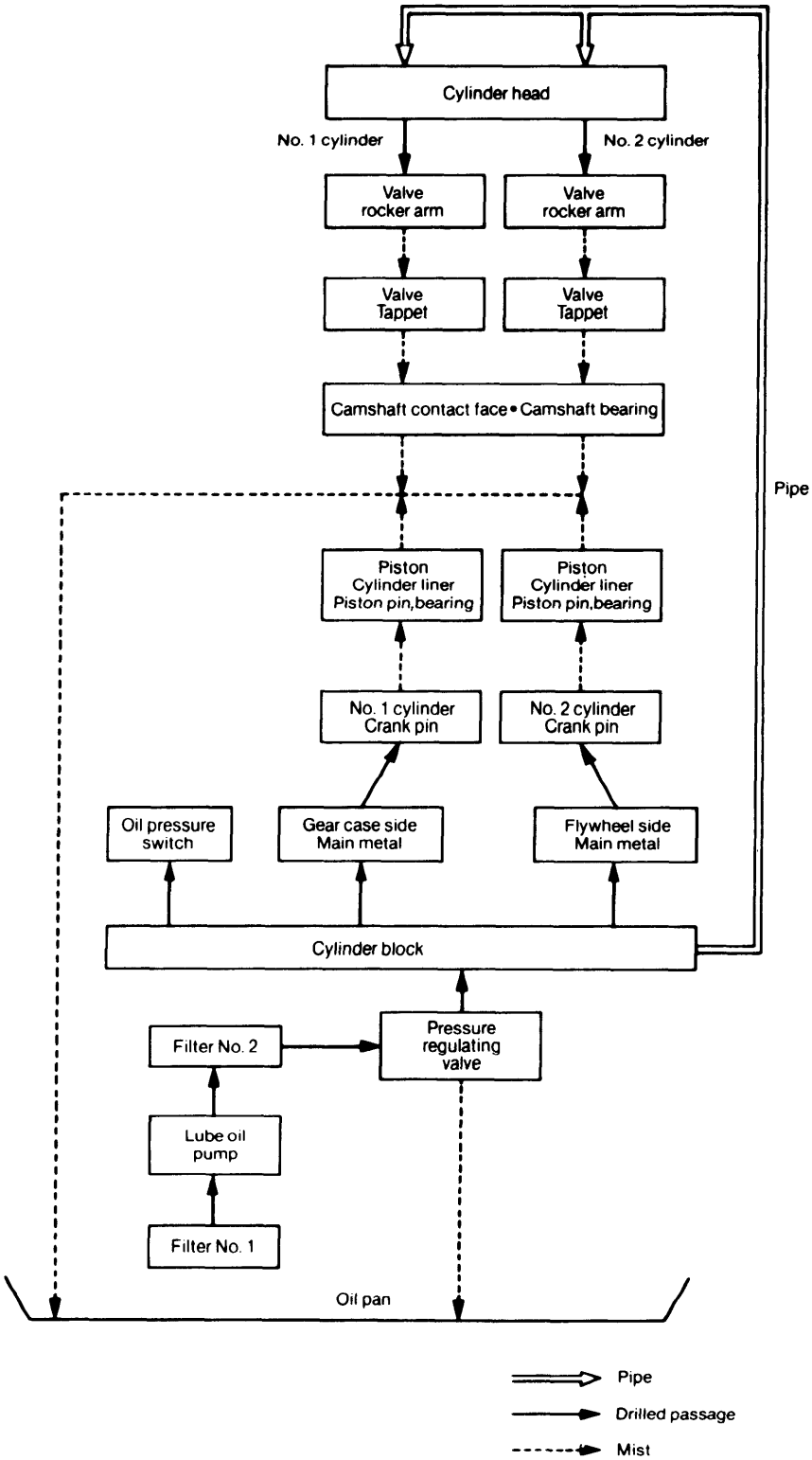

1-2 3QM30(H)

1-2.1 Lubricating oil system

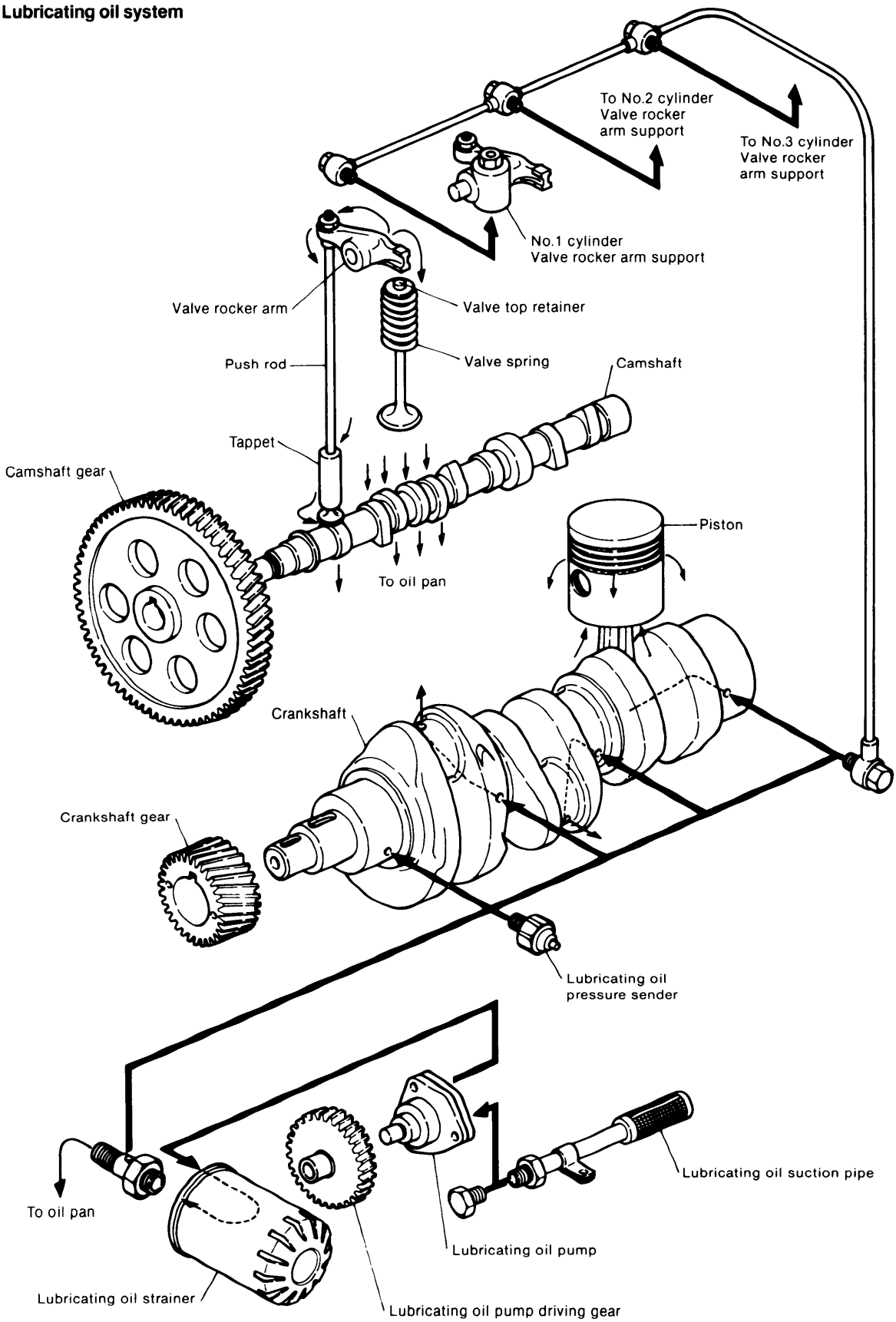

1-2.2 Lubricating oil diagram

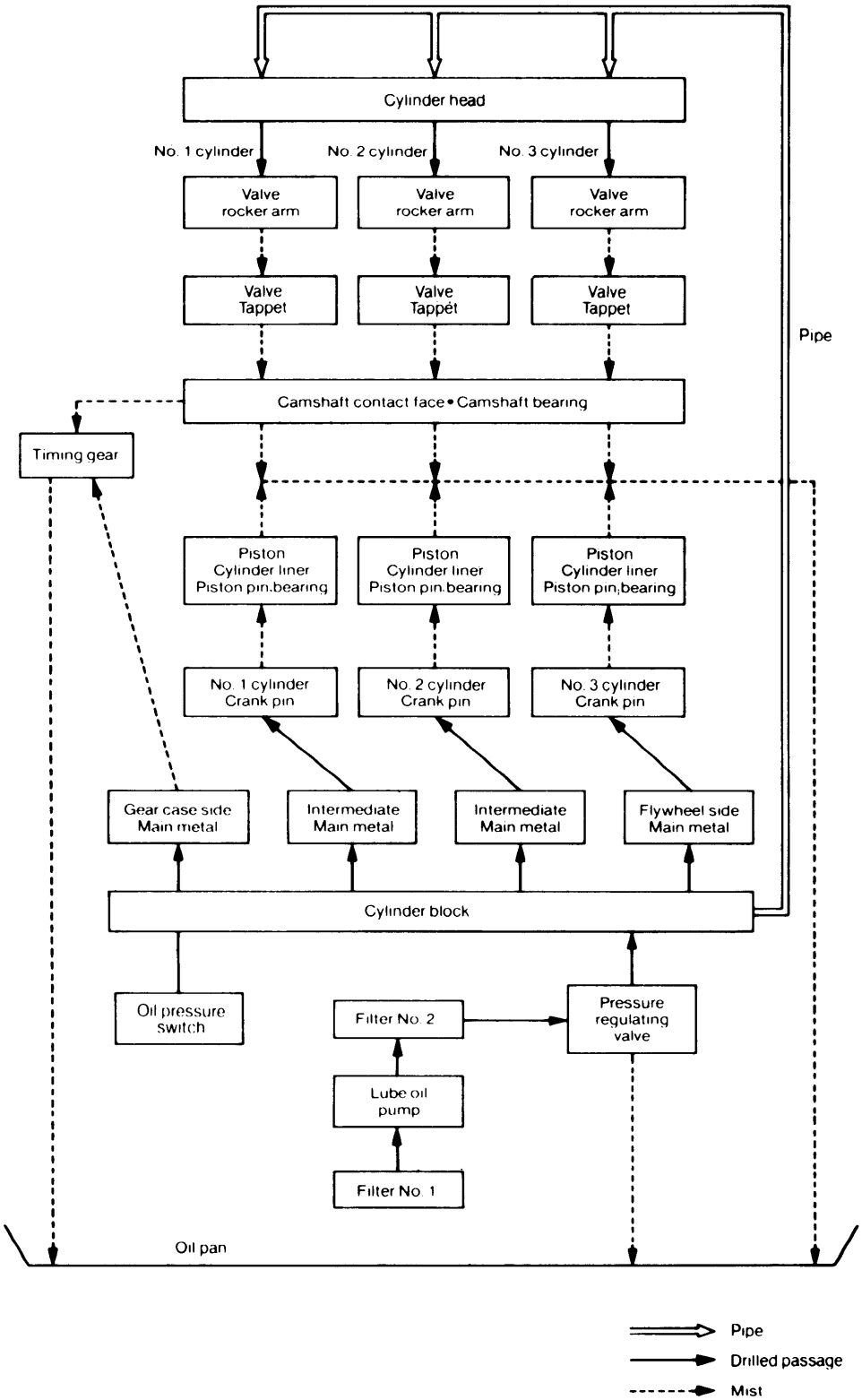

2. Oil Pump

2-1 Construction

The oil pump is a compact, low pressure variation trochoid pump comprising a trochoid curve inner rotor and outer rotor. Pumping pressure is provided by the change in volume between the two rotors caused by rotation of the rotor shaft.

The oil pump is installed under the timing gear case end and is driven by the lubricating pump driving gear.

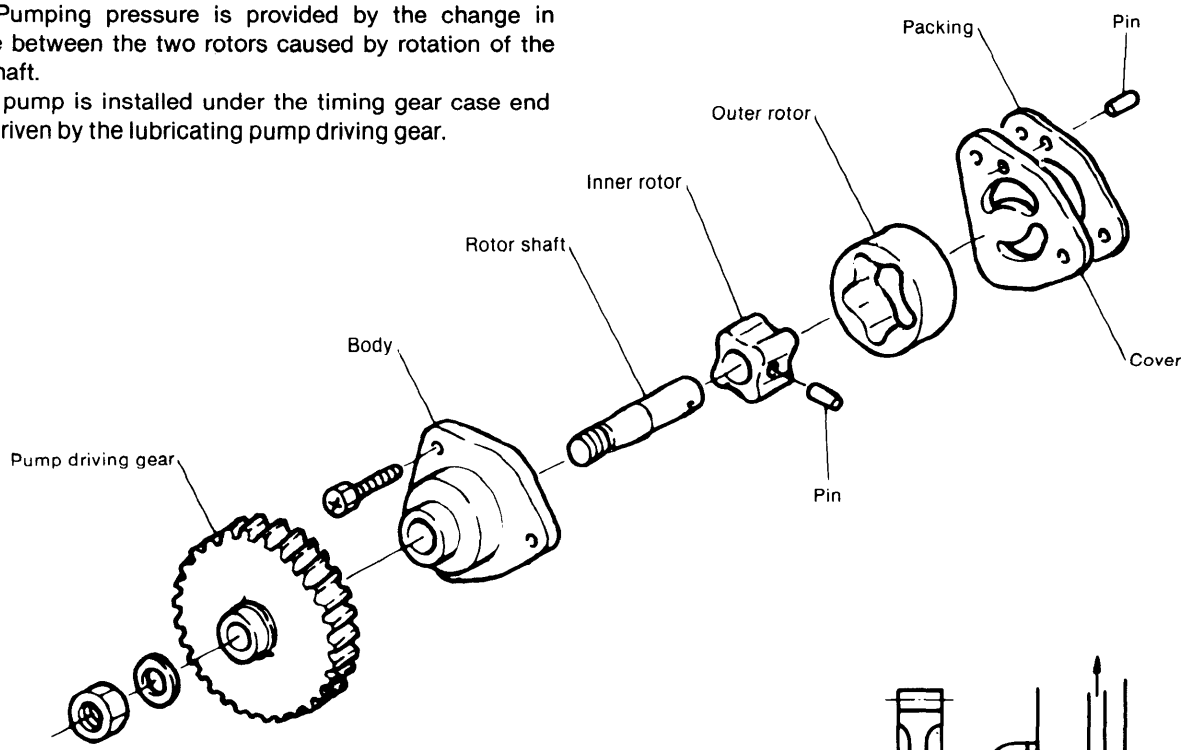

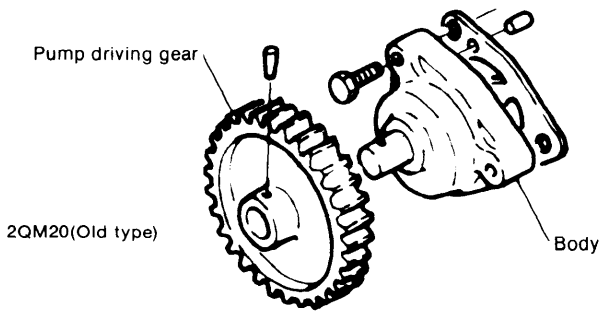

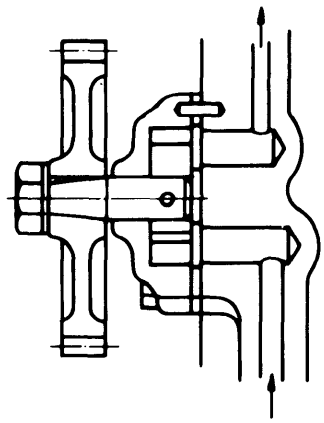

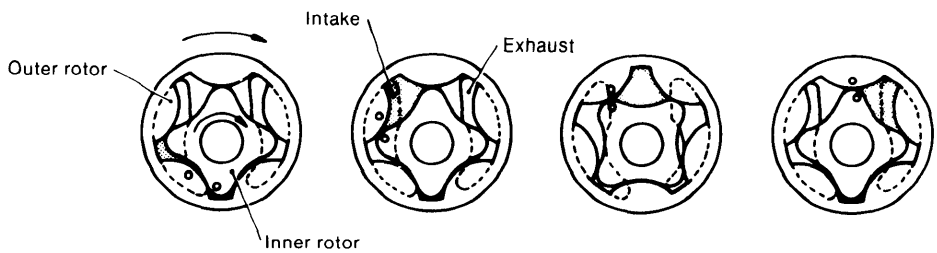

	2QM20(H)	3QM30(H)
Lubricating oil feed volume (at 2,600 rpm)	600ℓ/hr. or more	780ℓ/hr. or more
Lubricating oil pressure (at 2,600 rpm)	3.5 kg/cm² (47.79 lb/in.²)	

2-2 Disassembly

(1) Remove the timing gear case.

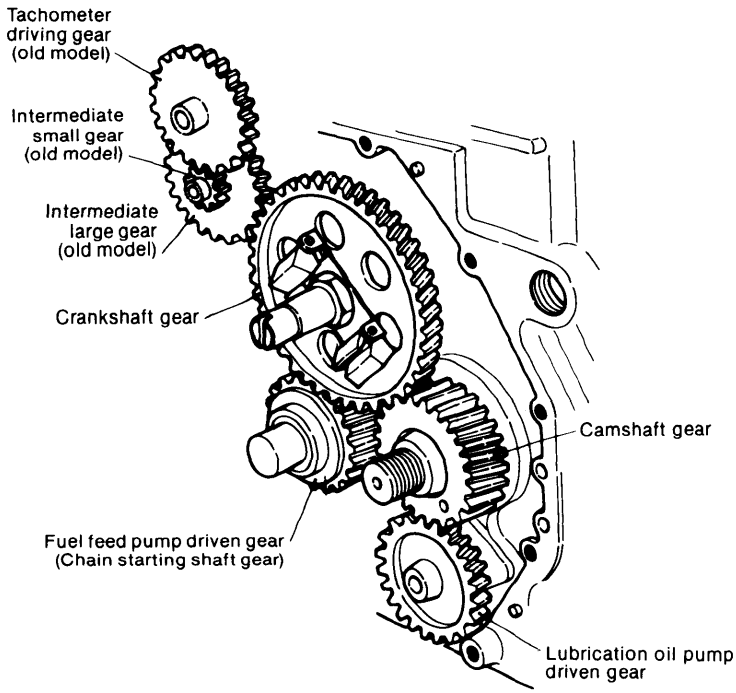

(2) Remove the lubricating oil pump driving gear and pump assembly.

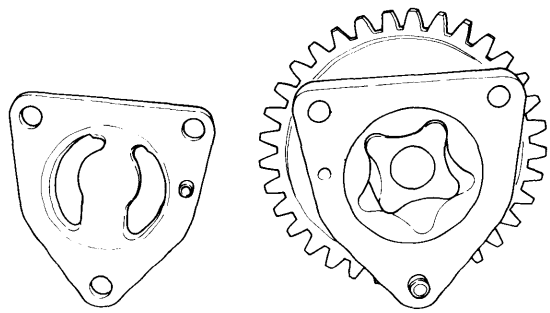

(3) Remove the taper pin and the driving gear.
(4) Remove the inner rotor and outer rotor from the body.
(5) Pull out the outer rotor.
(6) Remove the pin and separate the inner rotor and rotor shaft.

2-3 Inspection

When the discharge pressure of the oil pump is extremely low, check the oil level. If it is within the prescribed range, the oil pump must be inspected.

(1) Outer rotor and pump body clearance

Measure the clearance by inserting a feeler gauge between the outside of the outer rotor and the pump body casing. If the clearance exceeds the wear limit, replace the outer rotor and pump body as a set.

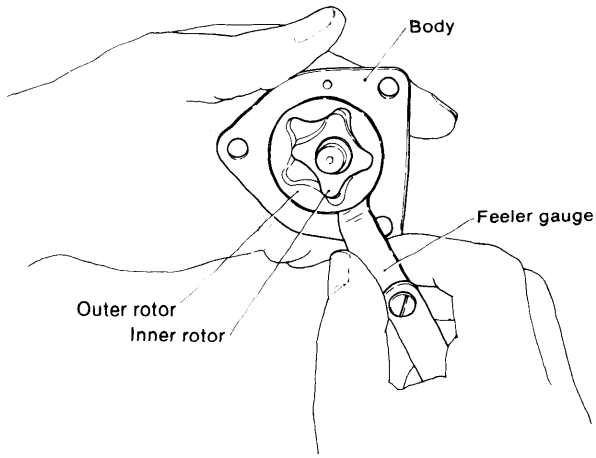

mm (in.)

Maintenance standard	0.050 ~ 0.105 (0.00197 ~ 0.00413)
Wear limit	0.15 (0.00591)

(2) Outer rotor and inner rotor clearance

Fit one of the teeth of the inner rotor to one of the grooves of the outer rotor and measure the clearance at the point where the teeth of both rotors are aligned. Replace the inner rotor and outer rotor ass'y if the wear limit is exceeded.

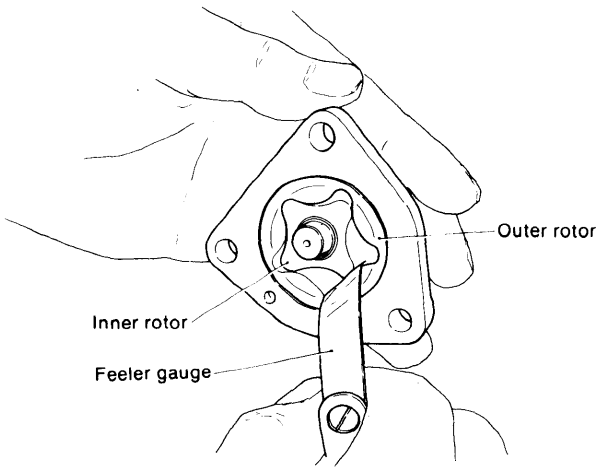

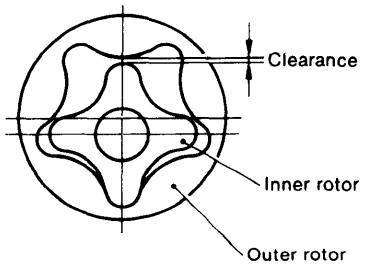

mm (in.)

Maintenance standard	0.050 ~ 0.105 (0.00197 ~ 0.00413)
Wear limit	0.15 (0.00591)

(3) Pump body and inner rotor, outer rotor side clearance

Install the inner rotor and outer rotor into the pump body casing so that they fit snugly.
Check the clearance by placing a ruler against the end of the body and inserting a feeler gauge between the ruler and the end of the rotor. Replace as a set if the wear limit is exceeded.

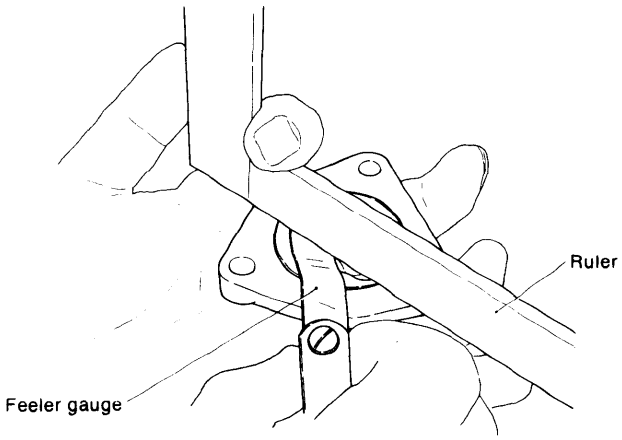

mm (in.)

Maintenance standard	0.06 ~ 0.10 (0.00236 ~ 0.00393)
Wear limit	0.13 (0.00511)

(4) Rotor shaft and body clearance

Measure the outside diameter of the rotor shaft and the inside diameter of the body shaft hole, and replace the rotor shaft and body as an ass'y if the clearance exceeds the wear limit.

mm (in.)

	Maintenance standard	Clearance when assembled
Rotor shaft outside diameter	12.63 (0.4972)	0.013 ~ 0.043 (0.0005 ~ 0.0017)
Rotor shaft hole inside diameter	12.63 (0.4972)	0.013 ~ 0.043 (0.0005 ~ 0.0017)

3. Oil Filter

3-1 Construction

The oil filter removes dirt and metal particles from the lubricating oil to minimize wear of moving parts. The construction of the oil filter is shown below.
The lubricating oil from the oil pump is passed through the filter paper and distributed to each part as shown by arrow A in the figure.
After extended use, the filter paper will become clogged and its filter performance will drop. When the pressure loss caused by the filter paper exceeds 1 kg/cm² (14.22 lb/in.²), the bypass valve inside the filter opens and the lubricating oil is sent to each part automatically as an emergency measure, without passing through the filter, as shown by arrow B.

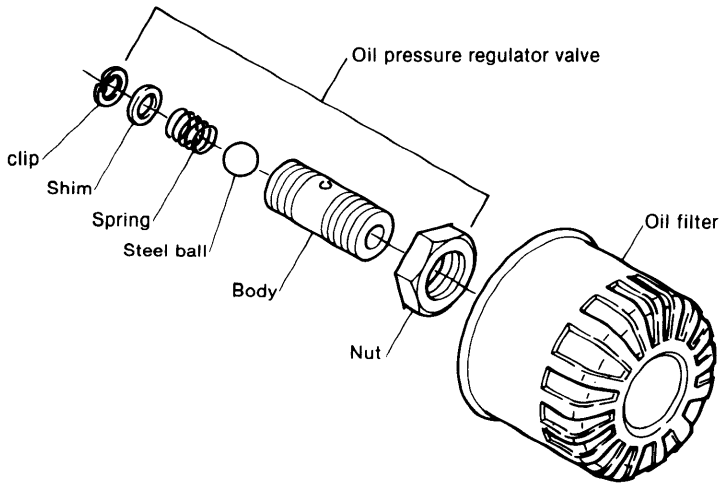

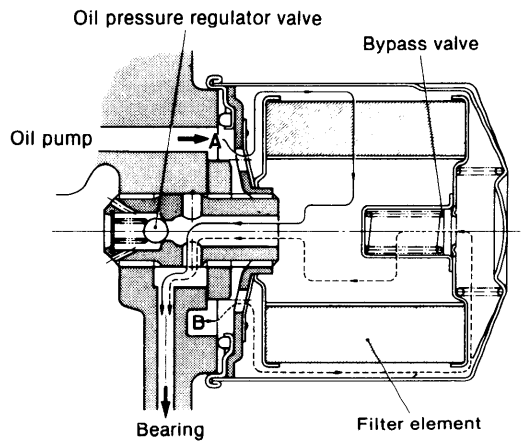

NOTE: The oil filter construction is the same in the 2QM20(H) and 3QM30(H) except for the lubricating oil pressure regulator valve. For details see the next page on the lubricating oil pressure regulator valve. The figure above shows the oil filter for the 2QM20(H).

3-2 Replacement

When the oil filter has been used for an extended period, the filter paper will become clogged, unfiltered lubricating oil will be sent directly to each part from the bypass circuit, and wear of moving parts will be accelerated. Therefore, it is important that the filter be periodically replaced.
Because this oil filter is a cartridge type, it is replaced as a complete unit.

Oil filter replacement period	Every 300 hours of engine operation

3-2.1 Replacing the oil filter

(1) Clean the oil filter mounting face on the cylinder block.
(2) Before installing the new filter, coat the rubber packing with a thin coat of lubricating oil.
(3) Turn the filter gently until it contacts the rubber packing of the seal surface, then tighten another 2/3 turn.
(4) After installation, run the engine and check the packing face for oil leakage.

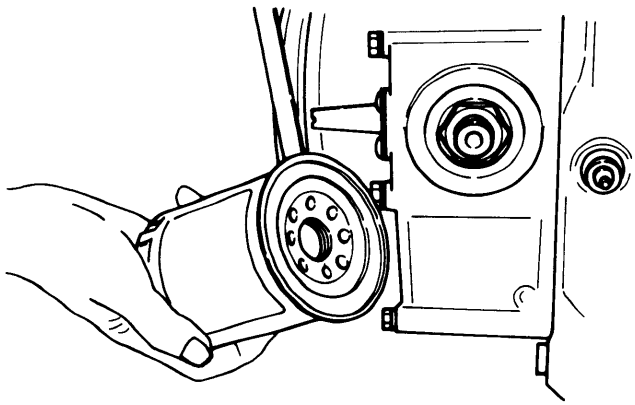

3-2.2 In case of oil leakage

If there is oil leakage, remove the oil filter and replace the packing. At the same time, inspect the cylinder block mounting face and repair the face with an oil stone if it is scored.

4. Oil Pressure Regulator Valve

4-1 Construction

The oil pressure regulator valve, located at the oil filter mounting, serves to adjust the pressure of the lubricating oil to the prescribed pressure during operation. When the pressure of the lubricating oil from the oil filter exceeds the force of the spring, the metal ball is pushed away from the valve seat and the lubricating oil flows to the oil pan through the gap between the ball and seat. The spring's force is adjusted with a shim.

2QM20(H)

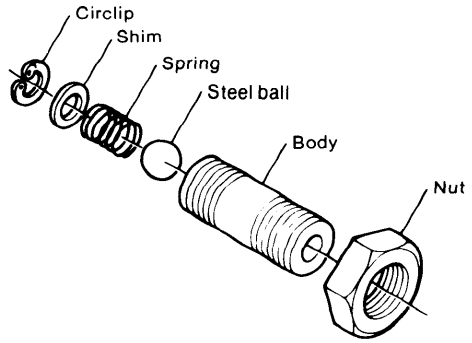

3QM30(H)

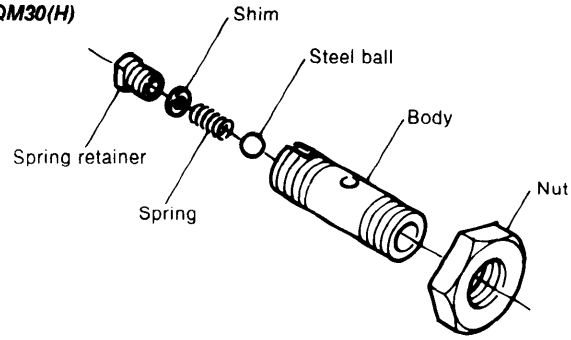

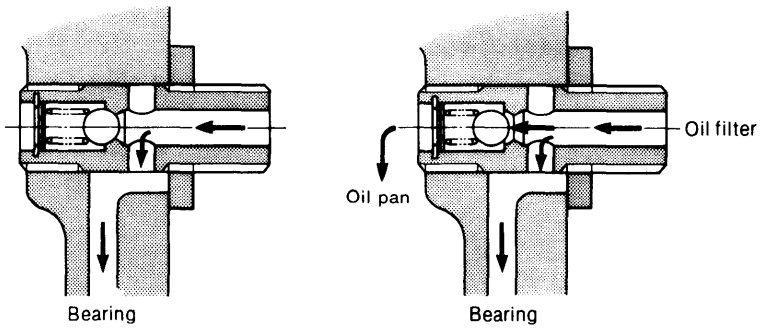

4-2 Disassembly

(1) Remove the oil filter.
(2) Loosen the oil pressure regulator valve mounting nut and unscrew the adjustment valve.
(3) Remove the circlip or the spring retainer and remove the shim, spring, and steel ball.

4-3 Inspection

(1) Check the steel ball and valve seat for contact and wear.
(2) Check the valve spring for damaged coils and permanent strain.

mm (in.)

	2QM20(H)	3QM30(H)
Valve spring free length	23 (0.9055)	15.5 (0.6102)

Model	2QM20(H)	3QM30(H)	
Standard pressure	2.5 ~ 3.5 kg/cm² (35.56 ~ 49.78 lb/in.²)	2.5 ~ 3.5 kg/cm² (35.56 ~ 49.78 lb/in.²)	
Shim thickness	1.0mm (0.0394in.)	0.2mm (0.0079in.)	0.3mm (0.0118in.)
Pressure change by shim	0.3 kg/cm² (4.267 lb/in.²) per shim	0.18 kg/cm² (2.561 lb/in.²)	0.28 kg/cm² (3.984 lb/in.²)
Shim part No.	124450—35330	121250—35340	

5. Oil Pressure Measurement

The lubricating oil pressure is montiored by a pilot lamp, but it must also be measured using a pressure gauge. Connect the oil pressure gauge to the pilot lamp unit for primary pressure and to the lubricating oil pipe connector for secondary pressure, as shown in figure.
Secondary oil pressure is especially important. Idle the engine at medium speed when measuring the oil pressure. Also check whether the oil pressure rises smoothly and to the standard value.

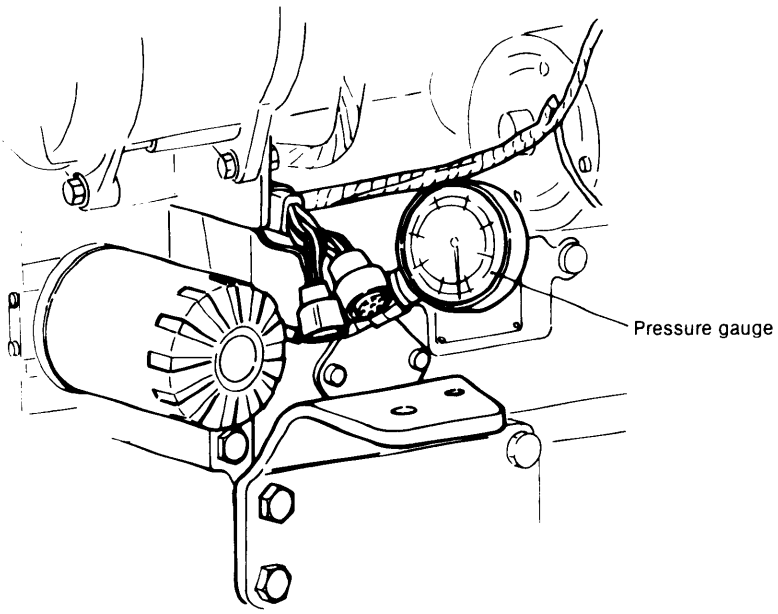

Secondary pressure standard value	Idling	0.5 kg/cm² (7.112 lb/in.²)
	3,000 rpm	2.5 ~ 3.5 kg/cm² (35.56 ~ 49.78 lb/in.²)

If the oil pressure is lower than the standard value, probable causes are:
(1) clearance of lubricated bearings in the lubricating oil circuit is too large (Shaft or bearing is worn).
(2) excessive oil escaping from rocker arm support.
Therefore, inspection and repair of the bearings and rocker arm support are required.

CHAPTER 7

COOLING SYSTEM

A. Seawater cooling [For model 2QM20(H), 3QM30(H)]
1. Cooling System. 7-A-1
2. Water Pump and Bilge Pump (Option) 7-A-4
3. Thermostat 7-A-7
4. Anticorrosion Zinc. 7-A-8
5. Kingston Cock 7-A-9
6. Bilge Strainer. 7-A-10

B. Fresh water cooling [For model 2QM20Y(F), 3QM30Y(F)]
1. Cooling System 7-B-1
2. Fresh Water Pump 7-B-3
3. Fresh Water Tank 7-B-6
4. Filler Cap and Subtank (Option) 7-B-9
5. Thermostat 7-B-11
6. Anticorrosion Zinc 7-B-13
7. Precautions. 7-B-14

A. Sea water cooling

[For model 2QM20(H), 3QM30(H)]

1. Cooling System

1-1 Composition

(1) A sea water direct cooling system incorporating a rubber impeller pump is employed.
(2) A thermostat is installed on the water-cooled exhaust manifold and a bypass circuit is provided to keep the cooling water temperature constant at all times.
This not only prevents overcooling at initial operation, but also improves the combustion performance and increases the durability of moving parts by keeping the temperature constant.
(3) Anticorrosion zincs are provided at three places to prevent electric corrosion of the cylinder jacket and cylinder head by the sea water.
Two zincs are provided at the both cylinder head side covers. One zinc is provided at the cooling water cylinder intake coupling.
(4) A cooling water temperature sender is installed so that an abnormal rise in the cooling water temperature is indicated at the lamp on the instrument panel.
(5) A tandem type bilge pump for bilge pumping is also available.
(6) A scoop strainer is provided at the water intake Kingston cock to remove dirt and vinyl from the water.
(7) Rubber hoses are used for all interior piping. This eliminates pipe brazing damage due to engine vibration and simplifies the engine's vibration mounting.

1-1.1 For model 2QM20(H)

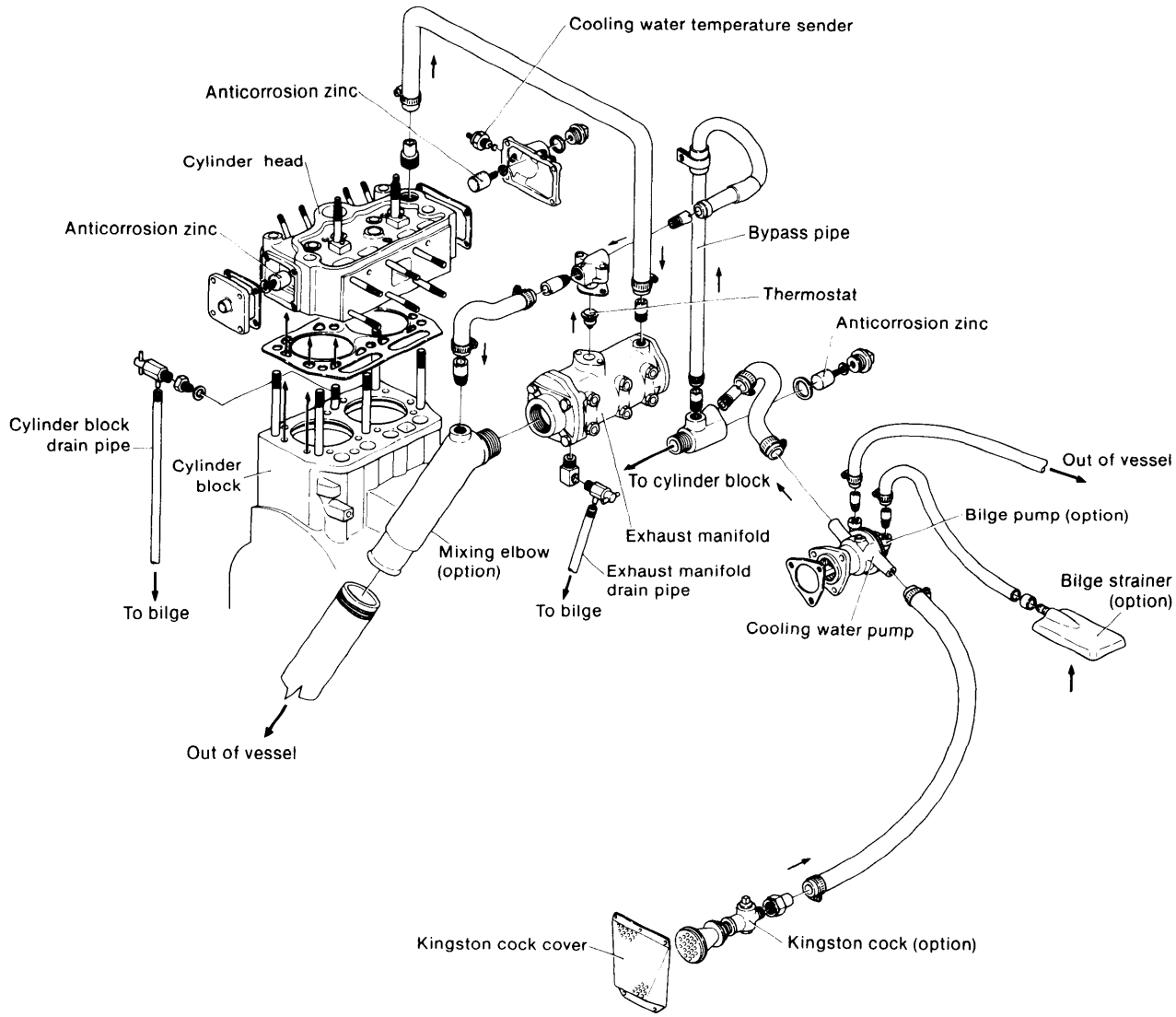

1-1.2 For model 3QM30(H)

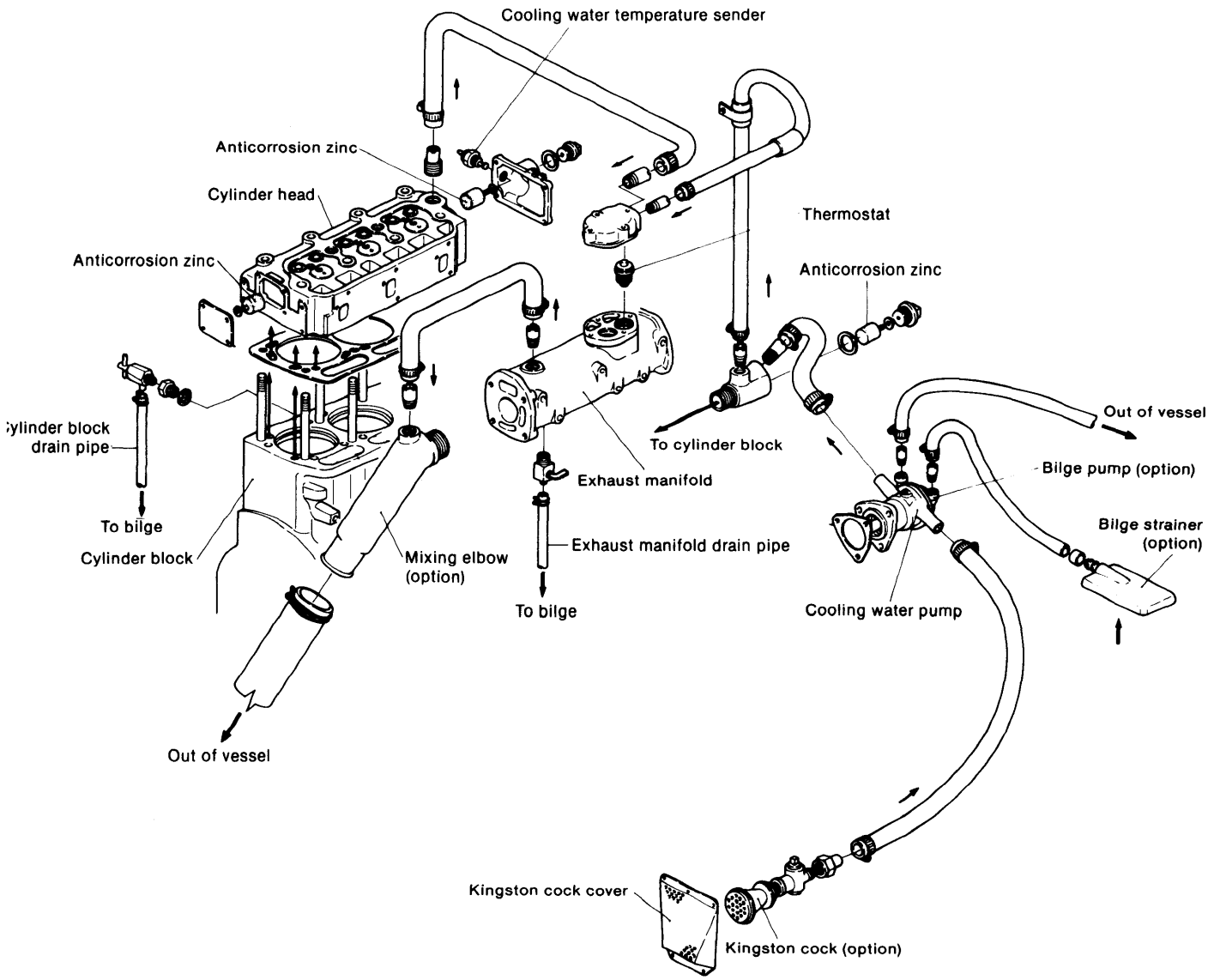

1-2 Cooling water route

The cooling water is sucked up by the water pump through a kingston cock installed on the hull. The water delivered from the water pump is branched in two directions at the cylinder intake coupling: one part of the water enters the cylinder jacket and the other bypasses the cylinder jacket and enters the mixing elbow.
(In the case of 3QM30(H) model water enters the mixing elbow through exhaust manifold.)
The water that enters the cylinder jacket cools the cylinders and then rises to the cylinder head through the passage between the cylinder and cylinder head and cools the cylinder head. From the cylinder head, the water enters the water jacket of the exhaust manifold to reduce the exhaust heat, and enters the mixing elbow through the thermostat mounting. At the mixing elbow, this water is mixed with the exhaust gas and is discharged from the vessel.
The thermostat is closed until the cooling water temperature reaches a fixed temperature (42°C), making the flow to the cylinder head and then through the bypass circuit.
When the cooling water temperature exceeds 42°C, the thermostat opens, and the cooling water begins to flow through the entire system. At 52°C, the thermostat valve is opened fully and the cooling water temperature is maintained at that level.

1-2.1 For model 2QM20(H)

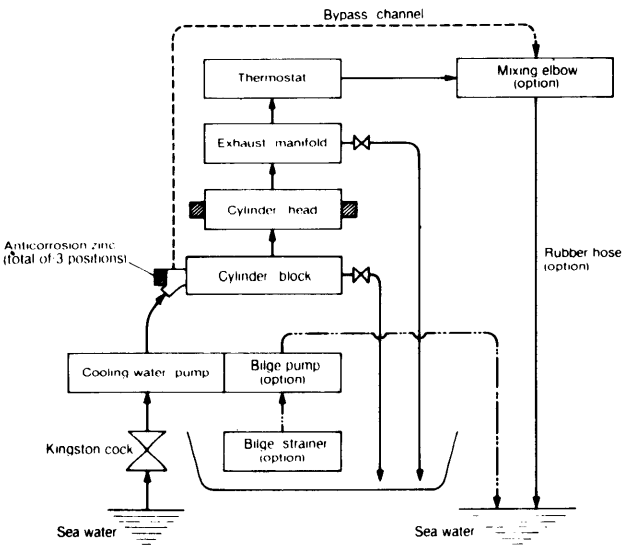

1-2.2 For model 3QM30(H)

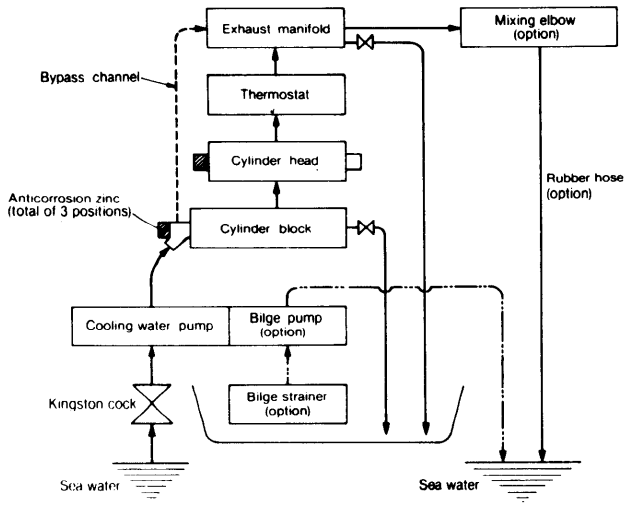

1-3 Piping

To simplify the cooling system piping and eliminate cracking of the brazed parts by vibration, rubber or vinyl hoses connected with hose clips are adapted for this engine.
Therefore, the following items must be checked when inspecting the cooling system:
(1) There must be no extreme bends in the piping.
(2) The cross section of the piping must not be changed by hanging heavy objects on the piping.
(3) There must be no fractures or cracks which allow water leakage.
(4) Piping must not touch high temperature parts, and piping must be securely clamped.
(5) Hose clips must be securely tightened and there must be no leakage from the insertion sections.

2. Water Pump and Bilge Pump

2-1 Construction and operation

The water pump is a rubber impeller type pump driven by the camshaft slit.
The rubber impeller, which has ample elasticity, is deformed by the offset plate inside the casing, causing the water to be discharged.
This pump is ideal for small, high-speed engines.
A bilge pump is installed in this pump as an optional device.

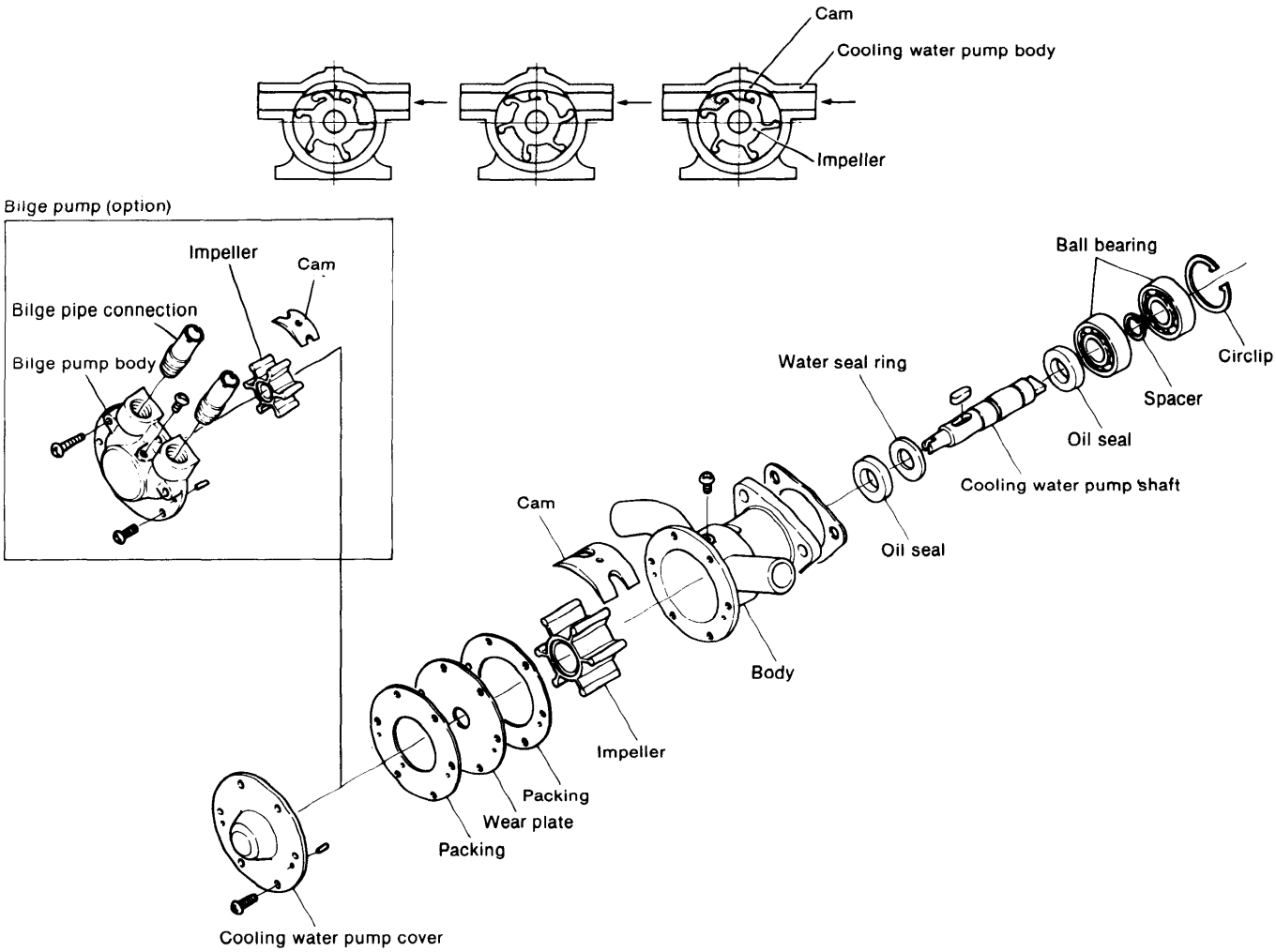

2-1.1 Cooling water pump (without bilge pump)

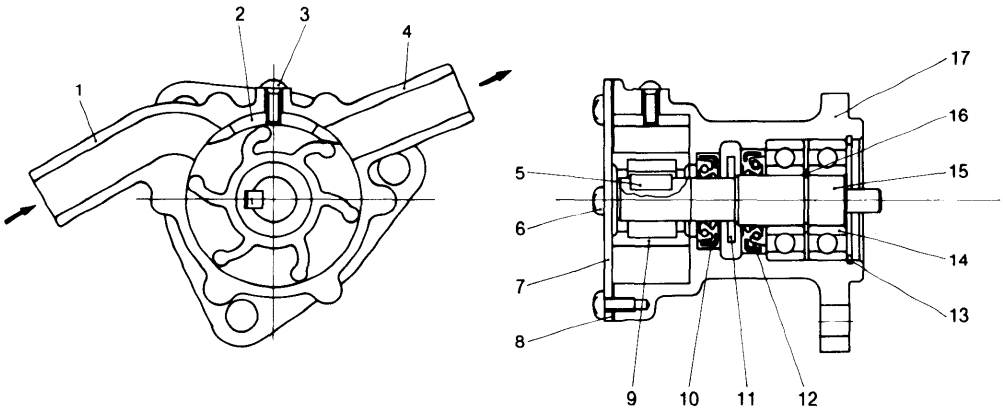

1. Inlet pipe connection
2. Cam
3. Set screw
4. Outlet pipe connection
5. Key
6. Screw
7. Cooling water pump cover
8. Packing
9. Impeller
10. Oil seal
11. Water seal ring
12. Oil seal
13. Circrip
14. Ball bearing
15. Cooling water pump shaft
16. Spacer
17. Cooling water pump body

2-1.2 Cooling water pump (with bilge pump)

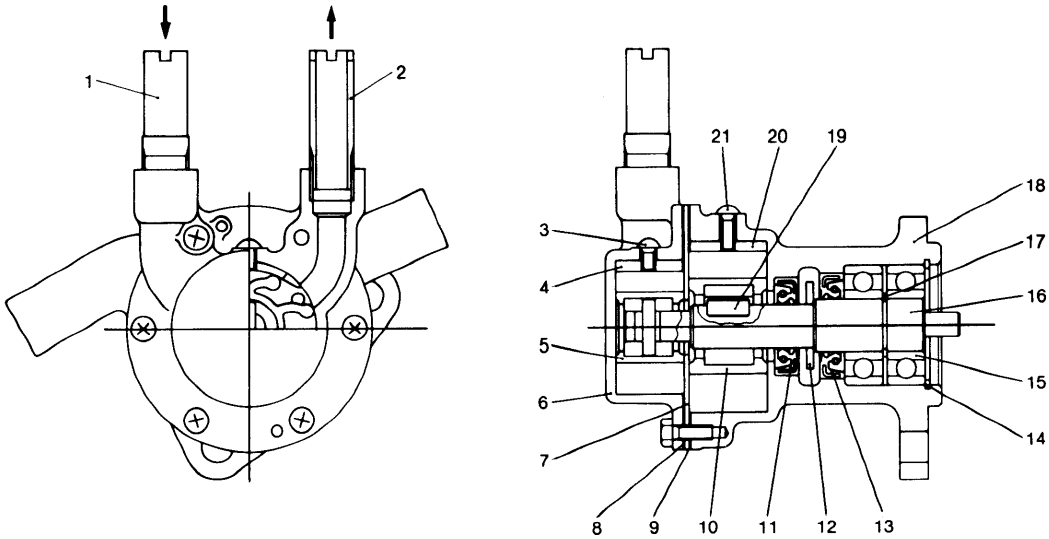

1. Inlet pipe connection
2. Outlet pipe connection
3. Set screw
4. Cam
5. Impeller
6. Bilge pump body
7. Wear plate
8. Packing
9. Packing
10. Impeller
11. Oil seal
12. Water seal ring
13. Oil seal
14. Circrip
15. Ball bearing
16. Cooling water pump shaft
17. Spacer
18. Cooling water pump body
19. Key
20. Cam
21. Set screw

2-1.3 Specifications

mm (in.)

	Water pump	Bilge pump
Rated speed	1400 rpm	
Suction head	1 (39.37)	1 (39.37)
Total head	4 (157.48)	2 (78.74)
Delivery capacity	800 ℓ/hr.	300 ℓ/hr.

2-2 Disassembly

(1) Loosen the set screw and remove the bilge pump ass'y and wear plate. (Remove the pump cover when the engine is not equipped with a bilge pump.)

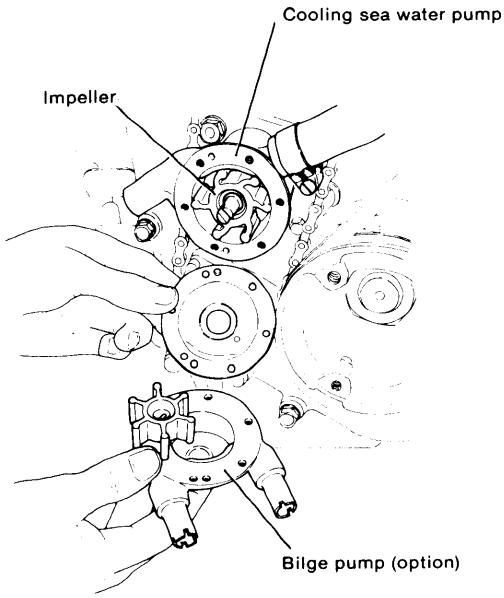

(2) Pull the water pump impeller.
(3) Remove the set screw and remove the offset plate.
(4) Remove the bearing snap ring and remove the impeller shaft and bearing ass'y while tapping the impeller side of the impeller shaft lightly.
(5) Pull the oil seal from the pump body.
(6) Pull the ball bearing and spacer from the impeller shaft.
(7) Remove the impeller and impeller shaft from the bilge pump body as an ass'y. Loosen the set screw and disassemble the shaft and impeller.
(8) Remove the offset plate.
(9) Remove the bushing as far as required.

2-3 Reassembly precautions

(1) Before inserting the rubber impeller into the casing, coat the sliding face, pump shaft and impeller fitting section with grease or Monton X.

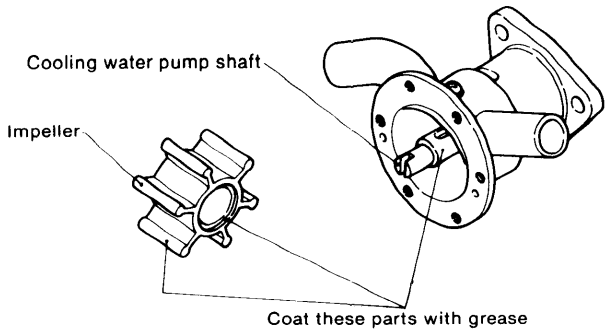

(2) Be sure that the direction of curving of the impeller is correct.
The impeller is curved in the direction opposite the direction of rotation.

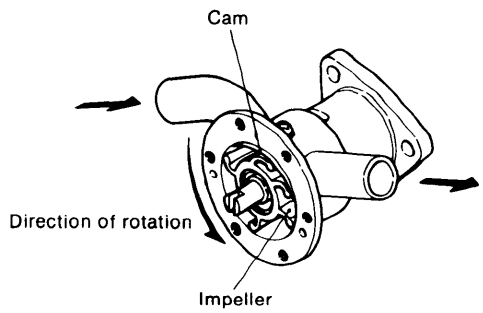

2-4 Handling precautions

(1) Never operate the water pump dry as this will damage the rubber impeller.
(2) Always turn the engine in the correct direction of rotation as turning the engine in the opposite direction will damage the rubber impeller.
(3) Inspect the pump every 1,500 hours of operation and replace if faulty.

2-5 Inspection

(1) Inspect the rubber impeller for fractures, cracks and other damage, and replace if faulty.
(2) Rubber impeller side wear and wear plate clearance.

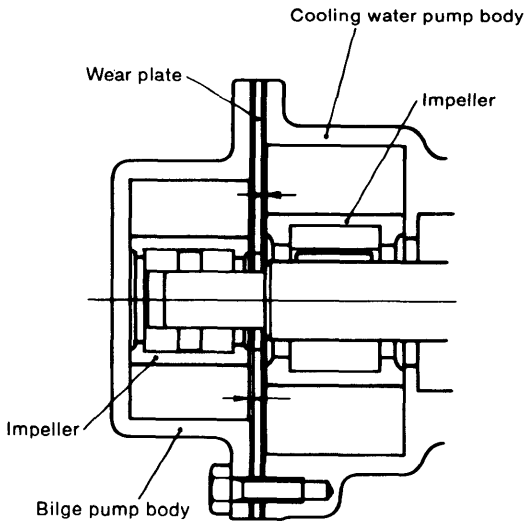

mm (in.)

		Maintenance standard	Clearance at assembly	Maximum allowable clearance	Wear limit
Water pump	Impeller width	19±0.1 (0.744 ~ 0.752)	0.2 (0.0079)	0.4 (0.0157)	
	Housing width	18.9 (0.7441) (without packing) 19.2 (0.7559) (with packing)			
	Wear plate wear				0.2 (0.0079)
Bilge pump	Impeller width	19 ±0.1 (0.744) ~ 0.752)	0.2 (0.0079)	0.4 (0.0157)	
	Housing width	18.9 (0.7441) (without packing) 19.2 (0.7559) (with packing)			
	Wear plate wear				0.2 (0.0079)

(3) Water pump impeller shaft oil seal section wear.

mm (in.)

	Maintenance standard	Wear limit
Oil seal section shaft diameter	10.0 (0.3937)	9.9 (0.3898)

(4) Inspect the bearing for play and check for seizing at the impeller shaft fitting section. Replace the bearing if there is any play.

3. Thermostat

3-1 Construction and operation

The thermostat remains closed until the cooling water temperature reaches a fixed temperature. When the cooling water reaches this fixed temperature, it collects at the cylinder head and the water flowing from the water pump is discharged through the bypass circuit. When the cooling water temperature exceeds a fixed temperature, the thermostat opens and the cooling water flows through the main circuit of the cylinder and cylinder head. The thermostat serves to prevent overcooling and improve combustion performance by maintaining the cooling water temperature at a specified level. The thermostat of this engine is installed at the exhaust manifold cooling water outlet.
The wax-pellet type thermostat is used for this engine. In this type, solid wax is enclosed in a small container called a pellet. When the temperature of the cooling water rises, the wax melts and cubical expansion occurs. The change in cubical volume is used to open and close the valve.

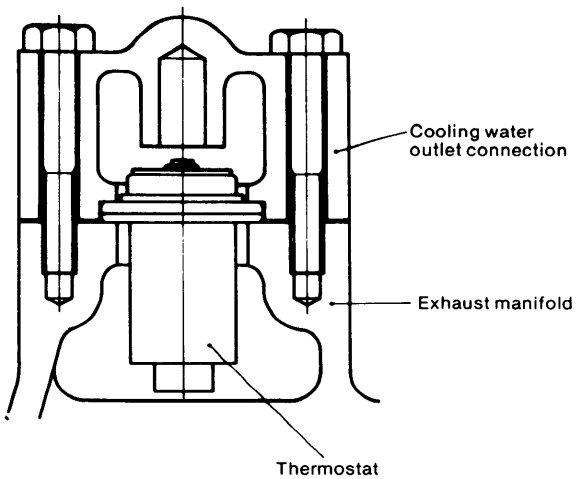

Thermostat operating temperature

Opening temperature	42°C
Full open temperature	52°C

The cylinder→cylinder head→exhaust manifold (2QM20H) cooling water is blocked by this thermostat and is not discharged from the exhaust manifold until it reaches 42°C. Therefore, the water sucked up by the water pump is discharged from the bypass circuit.
When the cooling water temperature exceeds 42°C, the thermostat opens and the cooling water begins to flow. At 52°C, the thermostat is fully opened and the cooling water system works at full capacity.

3-2 Inspection

(1) Remove the thermostat cover at the top of the exhaust manifold to remove and inspect the thermostat. Remove any dirt or foreign matter that has built up in the thermostat, and check the spring etc. for damage and corrosion.

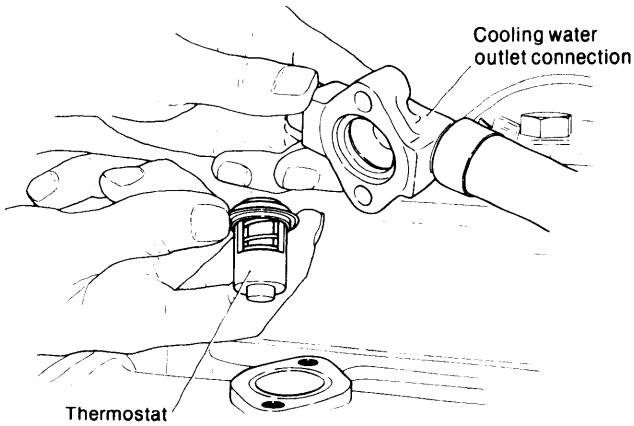

(2) In general, inspect the thermostat after every 250 hours of operation. However, always inspect it when the cooling water temperature has risen abnormally and when white smoke is emitted for a long period of time after the engine starts.

4. Anticorrosion Zinc

4-1 Principles

Anticorrosion zinc is installed to prevent electrolytic corrosion by sea water.
When different metals, i.e., iron and copper, are placed in an highly conductive liquid, such as sea water, the iron gradually rusts. The anticorrosion zinc provides protection against corrosion by corroding in place of the cylinder, cylinder liners and other iron parts.
Anticorrosion zinc is provided at the cooling water cylinder inlet three-way coupling and at both cylinder head covers.

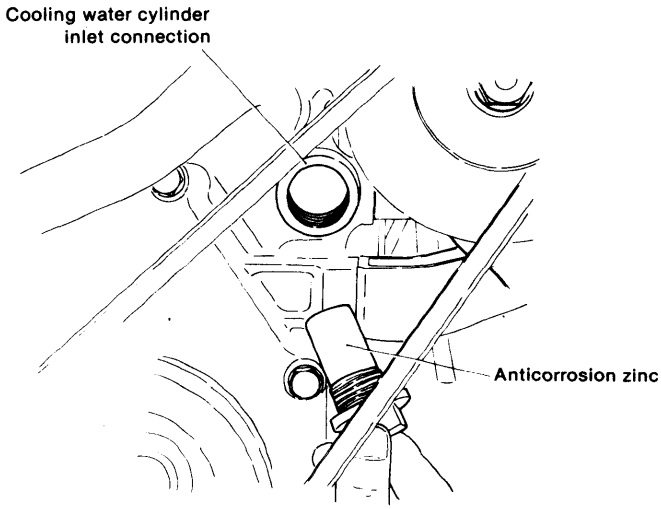

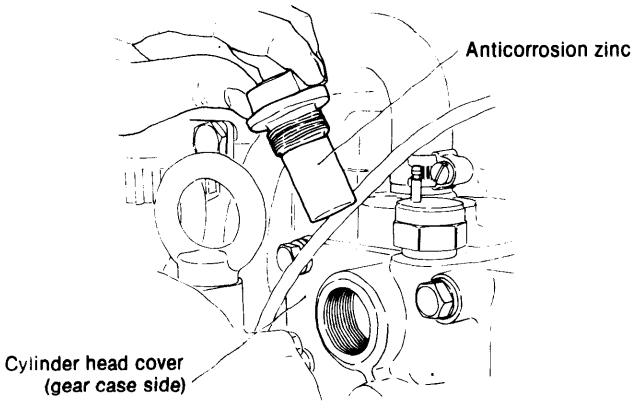

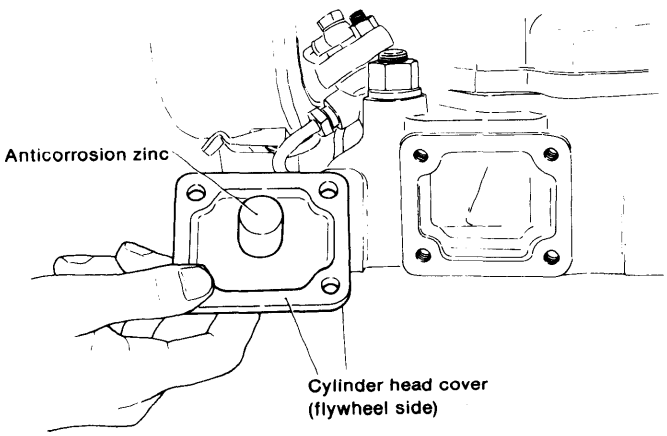

4-2 Inspection

Generally, replace the anticorrosion zinc every 500 hours of operation. However, since this period depends on the properties of the sea water and operating conditions, periodically inspect the anticorrosion zinc and remove the oxidized film on its surface.
Replace the anticorrosion zinc after 50% corrosion.

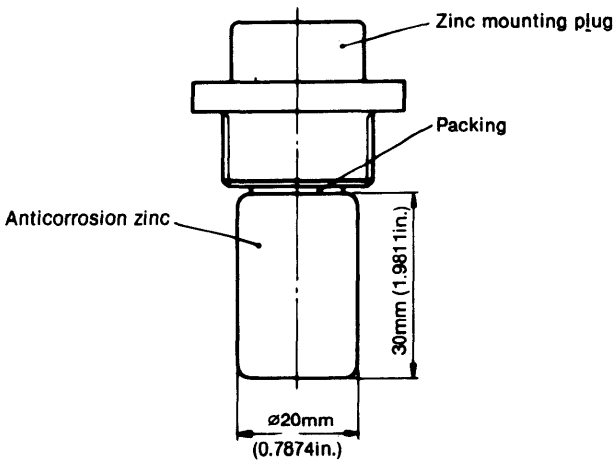

Part no. 27210-200300

Replace the anticorrosion zinc by pulling the old zinc from the zinc mounting plug and screwing in the new zinc.

5. Kingston Cock

5-1 Construction

The Kingston cock, installed on the bottom of the hull, controls the intake of cooling water into the boat. The Kingston cock serves to filter the water so that mud, sand, and other foreign matter in the water does not enter the water pump.
Numerous holes are drilled in the water side of the Kingston cock, and a scoop strainer is installed to prevent the sucking in of vinyl, etc.

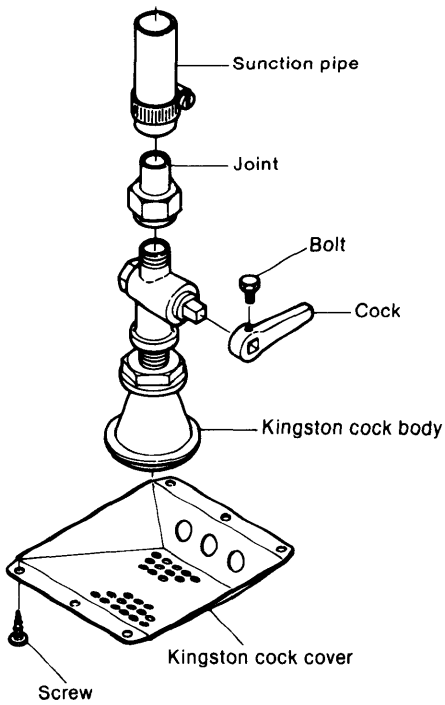

5-2 Handling precautions

Caution the user to always close the Kingston cock after each day of use and to confirm that it is open before beginning operation.
If the Kingston cock is left open, water will flow in reverse and the vessel will sink if trouble occurs with the water pump.
Moreover, if the engine is operated with the Kingston cock closed, cooling water will not be able to get in, resulting in engine and pump trouble.

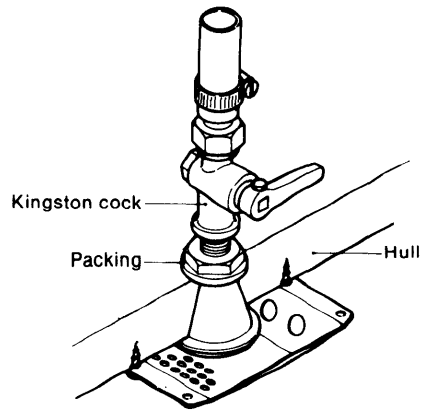

5-3 Inspection

When the cooling water volume has dropped and the pump is normal, remove the vessel from the water and check for clogging of the Kingston cock.
Moreover, when water leaks from the cock, disassemble the cock and inspect it for wear, and repair or replace it.

6. Bilge Strainer

6-1 Construction

Water collected in the bilge is sucked up and discharged from the vessel by the bilge pump. The bilge strainer serves to filter slagged oil, iron particles and other dirt mixed in the bilge. If the bilge strainer becomes clogged, the bilge pump will operate dry, reducing the durability of the impeller.

6-2 Inspection

Since the bilge strainer moves around the bilge and frequently becomes clogged with dirt and other foreign matter, periodically pull it from the bilge and wash it with clean water.

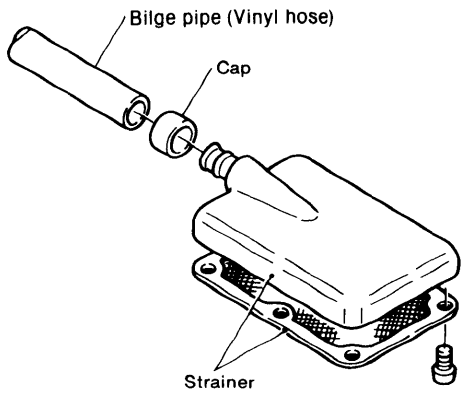

B. Fresh water cooling

[For model 2QM20Y(F), 3QM30Y(F)]

1. Cooling System

1-1 Composition

Models 2QM20Y(F) and 3QM30Y(F) are constructed from different parts but use the same water flow. The illustration below is of Model 2QM20Y(F).

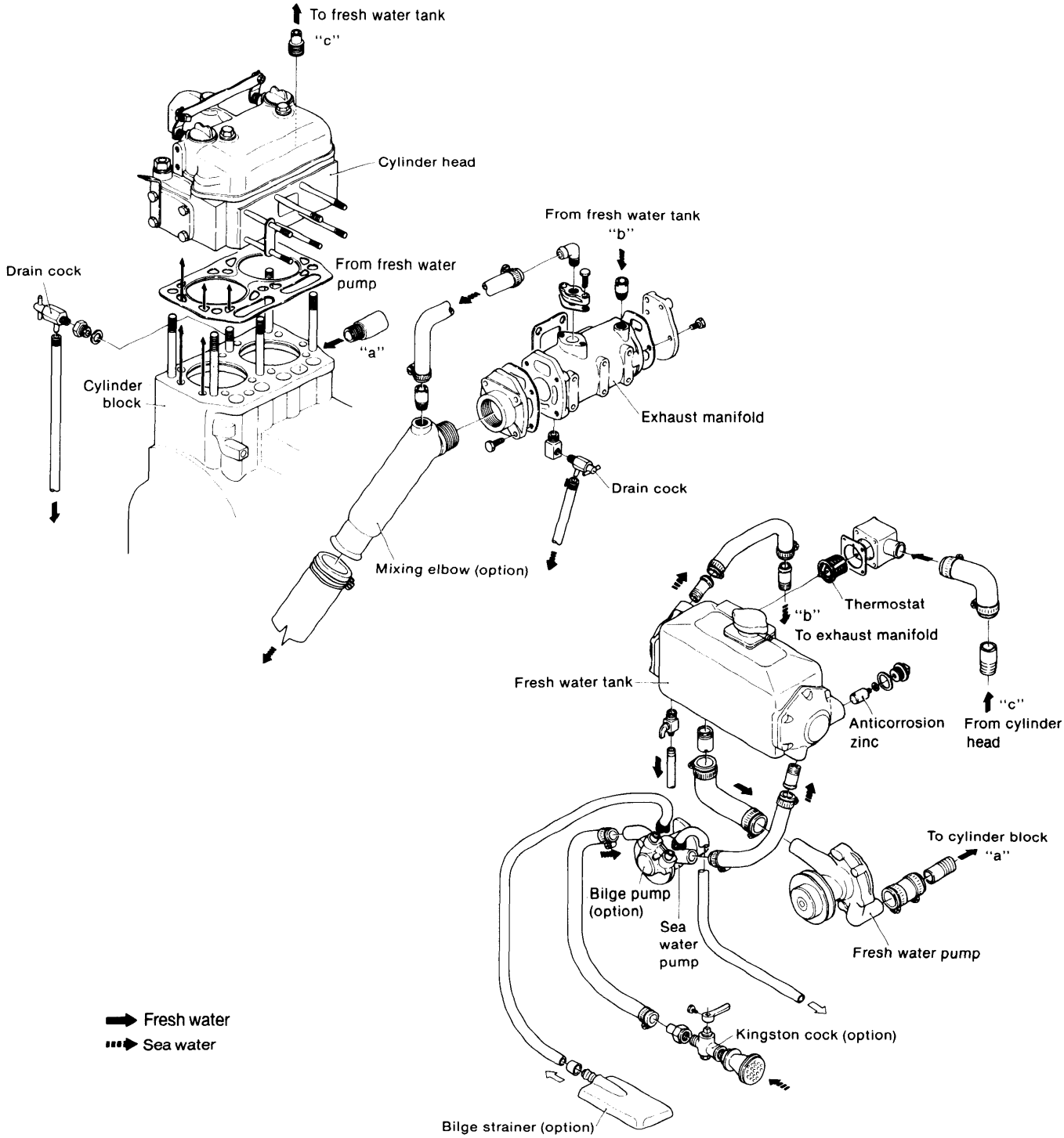

NOTE: On Model 3QM30Y(F), a flanged joint is used on the sea-water side of the exhaust manifold.

1-2 Cooling system diagram

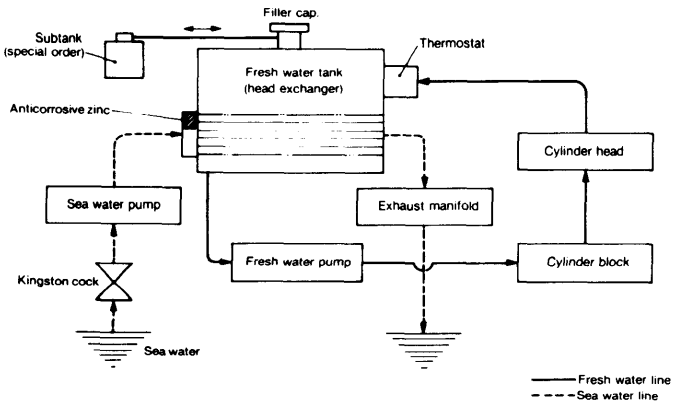

Sea water cooling pump.
Specifications

		Water pump	Bilge pump
Rated speed		1400 rpm	
Suction head		1 (39.37)	1 (39.37)
Total head		4 (157.48)	2 (78.74)
Delivery Capacity	2QM20F 2QM20Y	800ℓ/hr.	300ℓ/hr.
	3QM30F 3QM30Y	1600ℓ/hr.	300ℓ/hr.

Note; Reter to Page 7-A-4 for the Constraction

1-3 Cooling system configuration

With fresh water cooled engines, fresh water from the fresh water tank is circulated around the cylinder block and cylinder head. The fresh water itself is cooled by sea water.
The fresh water pump forces the fresh water through the cylinder block and cylinder head cooling passages and back to the fresh water tank. The fresh water is kept in constant circulation.
Sea water is delivered by the sea water pump and fed through tubes located inside the cooling pipe to cool the fresh water.
The sea water then is routed around the exhaust manifold for cooling purposes before being discharged back into the sea.
A thermostat at the inlet port of the fresh water tank closes when fresh water temperature is low (e.g. when engine is first started or during low-load operation) to restrict the flow.
When fresh water temperature reaches a certain point, the thermostat opens to allow water to flow through the cooling pipes so that the fresh water is cooled by the sea water. In this way, the temperature of the fresh water is kept within the specified range.
The sea water pump, bilge pump, bilge strainer and kingston cock are the same for both fresh water and sea water cooled engines. For details about these parts, refer to the information provided for sea water cooling systems. Below, only parts unique to the fresh water cooling system are described.

2. Fresh Water Pump

2-1 Pump construction

The fresh water pump is a centrifugal type and is used to move fresh water from the fresh water tank through the cooling passages in the cylinder block and cylinder head and back to the fresh water tank.
The fresh water pump is composed of a pump body, impeller, pump shaft, bearing unit and seals. It is driven by a belt and pulley arrangement at the end of the pump shaft.
The packed bearing unit supports the shaft by roller bearings. It cannot be disassembled.
The impeller is equipped with multiple blades and is mounted on the pump shaft.
The mechanical seal prevents water from entering from around the pump shaft. The impeller seal is fixed to the impeller side with spring pressure being applied from the pump body side.

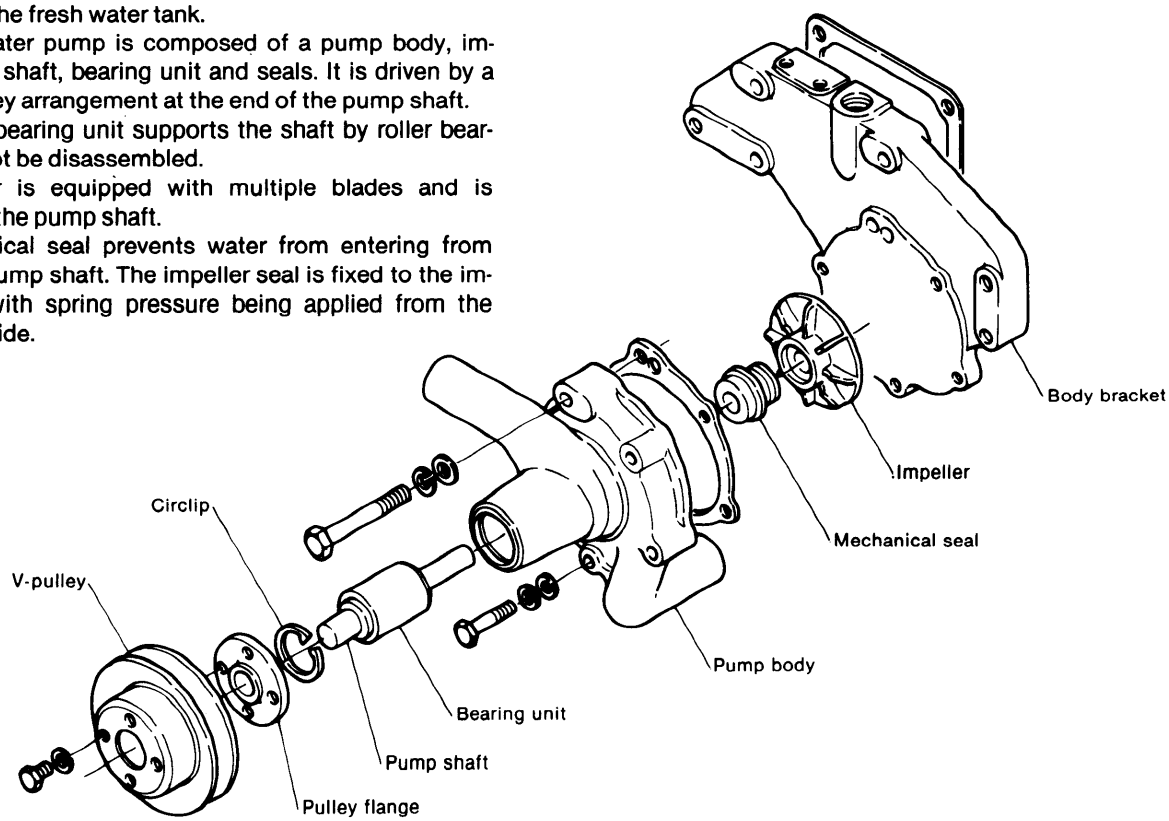

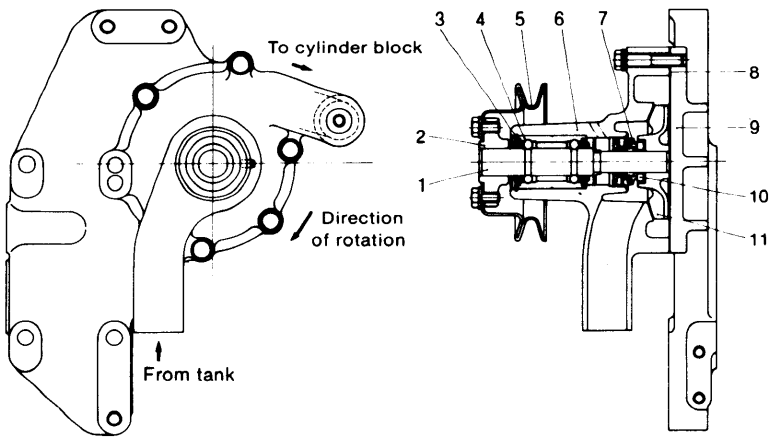

1. Pump shaft
2. Pulley flange
3. Circlip
4. Bearing unit
5. V-pulley
6. Pump body
7. Mechanical seal
8. Packing
9. Body bracket
10. Impeller seal
11. Impeller

2-2 Pump Capacity

Engine models	2QM20Y 2QM20F	3QM30Y 3QM30F
One hour rating (PS)	22	33
Crankshaft speed (rpm)	2800	2800
Pump shaft speed (rpm)	4700	4700
Delivery capacity (ℓ/min.)	3600	3600
Total head (m)	3.0	3.0

2-3 Pump disassembly

(1) Remove V-pulley assembly bolt and them remove the pulley from the flange.
(2) Using a puller, remove the flange.
Standard interference: 0.05 ~ 0.07mm
(0.0020 ~ 0.0028in.)

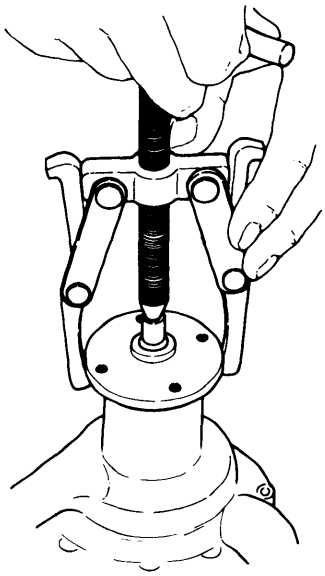

(3) Remove pump bracket.
(4) Using a puller, remove impeller from pump shaft.
Standard interference: 0.015 ~ 0.044mm
(0.0006 ~ 0.0017in.)

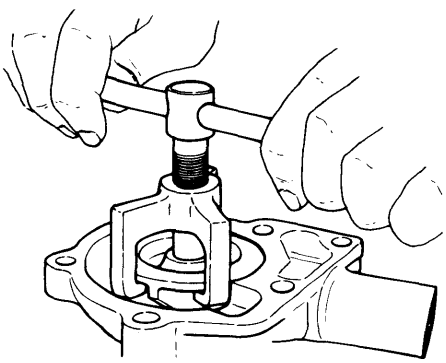

(5) Remove circlip. Then, using a press, remove the pump shaft and bearing unit from the pulley side.

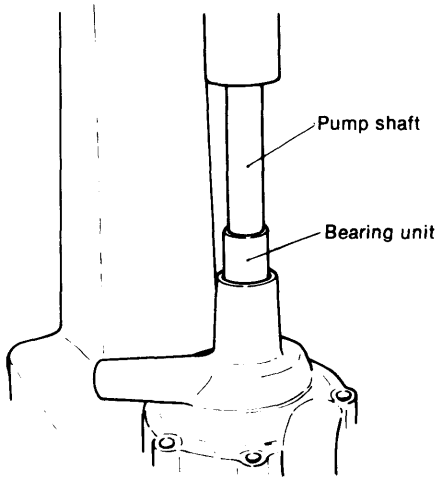

(6) Remove mechanical seal from pump body.
(7) Remove impeller seal and seat from the impeller.

2-4 Pump assembly

To assemble the pump, reverse the disassembly procedure and pay careful attention to the following points.
(1) Insert new packing between the pump body and the pump bracket.
(2) Press the mechanical seal to check that spring is functioning normally.

2-5 Inspection and measurement

(1) Bearing unit inspection
After installing bearing unit, rotate the pump shaft. If rotation is unsmooth, if abnormal noises occur, or if the fit is not proper, replace bearing unit and pump shaft.
(2) Impeller inspection
Check impeller for damage, corrosion and wear. Replace if required.
(3) Mechanical seal inspection
Check mechanical seal for defective spring, corrosion and wear at the contact point with the impeller seal. Repair or replace as required.
(4) Pump body and pump bracket inspection
Clean deposits and rust from body and bracket. Replace if heavily worn or corroded.
(5) Impeller clearances.

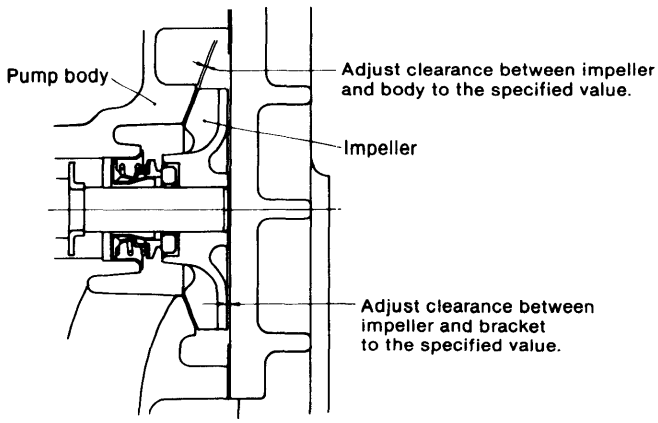

mm (in.)

	Maintenance standard	Wear limit
Clearance between impeller and body	0.5 (0.0197)	1.0 (0.039)
Clearance between impeller and bracket	0.5 (0.0197)	1.0 (0.039)

To measure clearance between impeller and body, insert and thickness gauge between the two parts at an oblique angle.
To measure clearance between impeller and bracket, place a straightedge on the pump body surface and insert a thickness gauge between the straightedge and impeller.

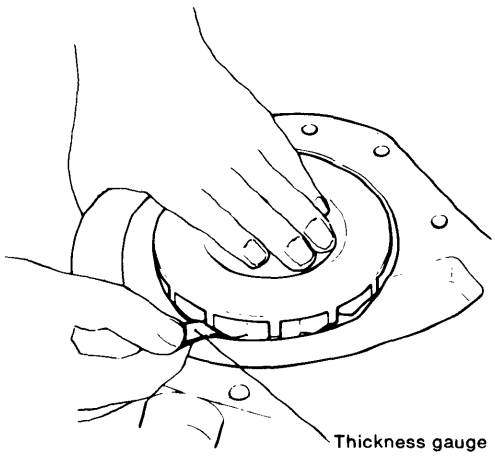

Measuring clearance between impeller and pump body

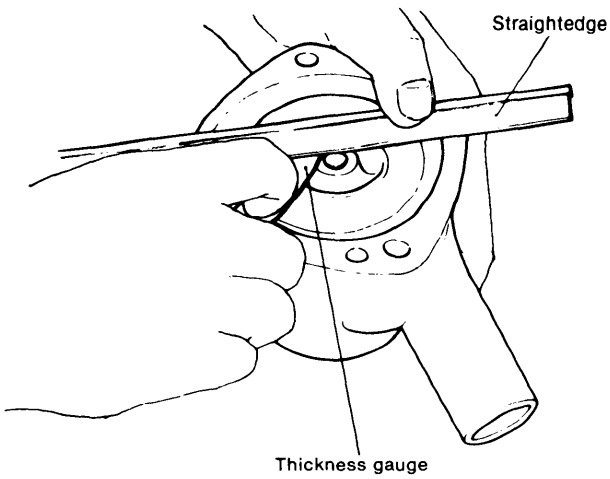

Measuring clearance between impeller and pump body bracket

(6) Impeller seal wear
Seal seats with a rough or damaged contacting surface may permit water to leak. Repair or replace as required.

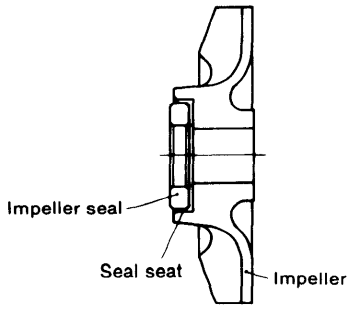

3. Fresh Water Tank

3-1 Tank construction

The fresh water tank is used to store the fresh water circulating in the engine and to cool it with sea water. The fresh water tank incorporates a cooling pipe which serves as a heat exchanger. The cooling pipe consists of a number of small diameter copper tubes and several baffle plates. These copper tubes, with their high heat conductivity, are supported by both flanges. Inside the pipe, baffle plates form a maze for fresh water flow to increase the cooling area. Fresh water enters through a port at one end of the cooling pipe, and passes between tubes and along the maze created by the baffle plates where it is cooled by the sea water flowing through the tubes.

A thermostat is provided at the fresh water inlet port. When fresh water temperature is too low (e.g. just after starting or during low load operation), the thermostat closes to restrict water flow until the fresh water temperature reaches the specified level.
The filler cap on the top of the tank is equipped with a pressure relief valve. When pressure exceeds the specified limit, this valve opens to release pressure through the overflow pipe.
On the other hand, when cooling system pressure becomes negative in relationship to the atmospheric pressure, air enters the overflow pipe.
The cover on the sea water port is protected by anticorrosion zinc to prevent corrosion inside the tank.

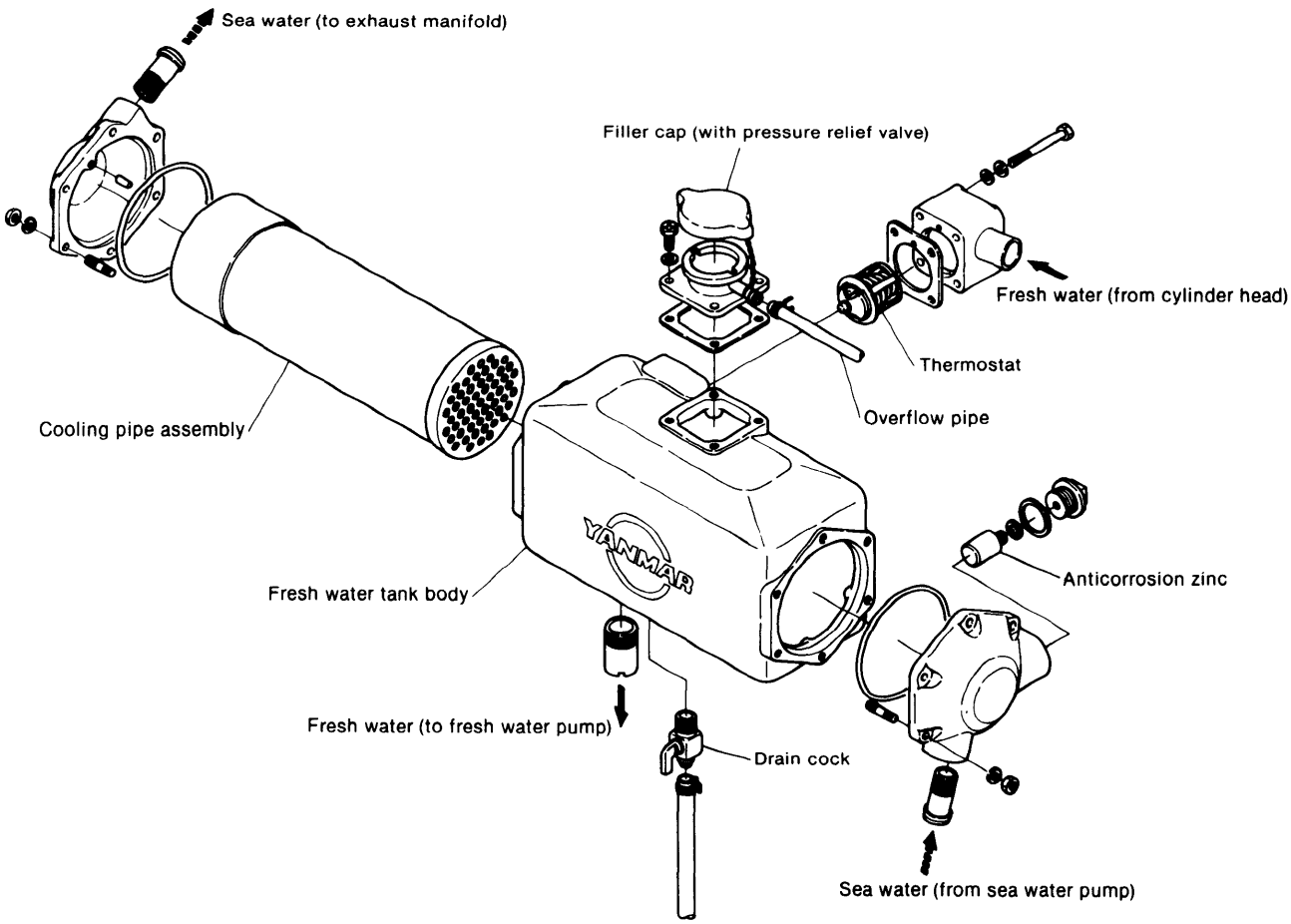

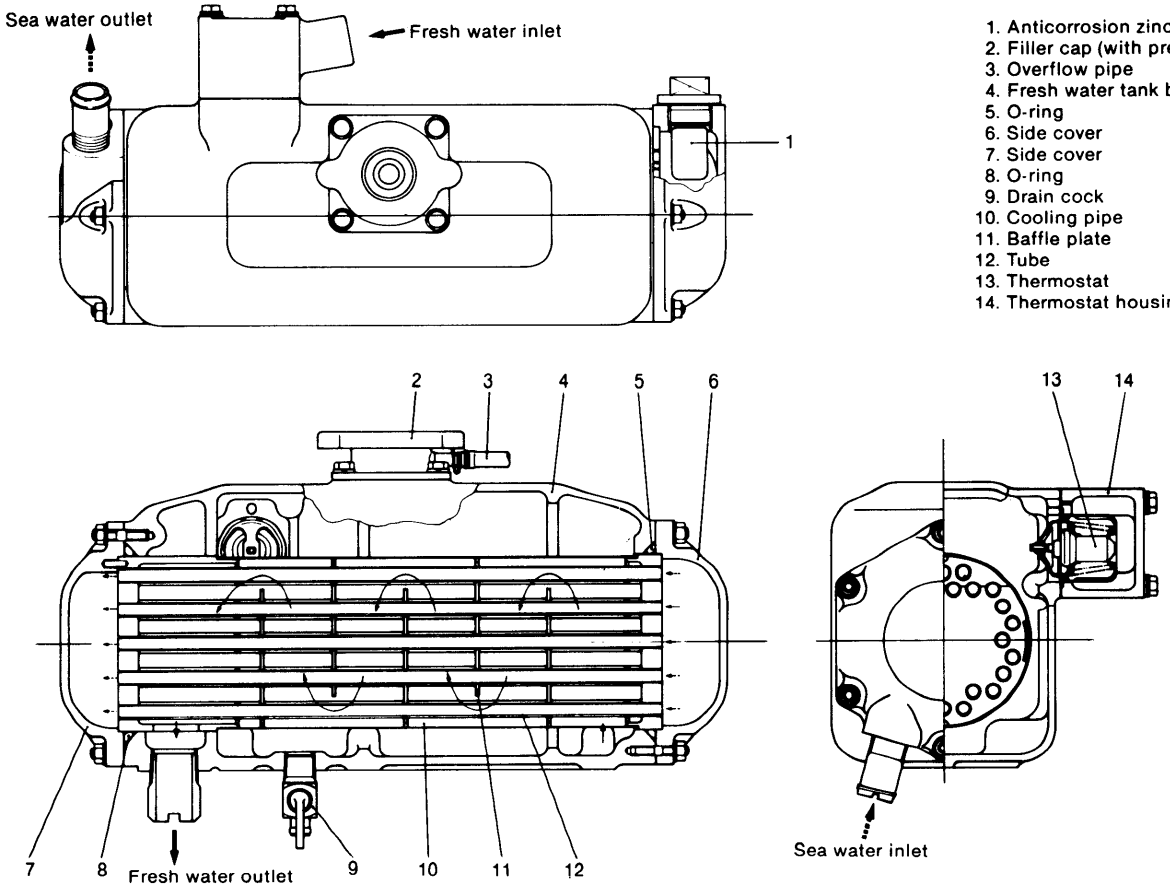

1. Anticorrosion zinc
2. Filler cap (with pressure relief valve)
3. Overflow pipe
4. Fresh water tank body
5. O-ring
6. Side cover
7. Side cover
8. O-ring
9. Drain cock
10. Cooling pipe
11. Baffle plate
12. Tube
13. Thermostat
14. Thermostat housing

3-2 Tank capacity

Engine model		2QM20Y 2QM20F	3QM30Y 3QM30F
Tank capacity	ℓ	6.0	6.9
Tube dia. × number	mm	ø6/ø8 × 55	ø6/ø8 × 55
Heat radiating area	m²	0.384	0.384
Fresh water flow	ℓ/h	3600/2800 rpm	3600/2800 rpm
Sea water flow	ℓ/h	850/2800 rpm	1300/2800 rpm
Sea water flow rate	m/s	0.15/2800 rpm	0.23/2800 rpm

3-3 Tank disassembly

(1) Remove thermostat housing from fresh water inlet port and remove thermostat.
(2) Remove filler cap and port.
(3) Remove tank side covers and pull out cooling pipe and rubber packings.

NOTE: After cooling pipe is removed, always replace the rubber packings on both side covers.

3-4 Tank inspection and cleaning

3-4.1 Cooling pipe

(1) Inspect for dirt and deposits in the tubes. Clean as required.
(2) Inspect caulked portions of tubes and flanges for damage. Repair or replace as required.
(3) Inspect the cooling pipe and tubes for leaks. Repair as required.
(4) Check for clogged water passages. Clean as required.

3-4.2 Tank

(1) Check for dirt and corrosion build-up inside tank and on side covers. Replace if corroded, broken or otherwise damaged.
(2) Check joints at sea water inlet and outlet ports and fresh water inlet and outlet ports. Retighten any loose screws and clean pipes as required.
(3) Check drain cock for clogging. If clogged, clean or repair as required. Retighten screws if necessary.
(4) For inspection of filler cap, anticorrosion zinc, and thermostat, see below.

3-4.3 Leakage test

(1) Test with compressed air and test tank. Seal fresh and sea water ports with rubber caps and immerse tank in a test tank filled with water. Inject compressed air through the overflow pipe and check for air bubbles.

NOTE: Air pressure should be 0.5 ~ 2.0kg/cm² (7.11 ~ 28.45 lb/in²).

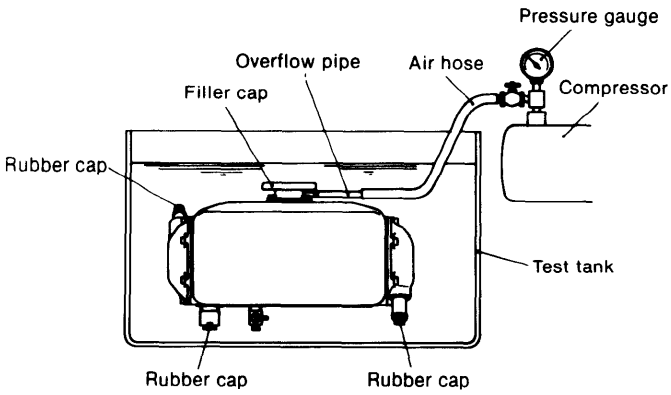

Leakage test using compressed air and test tank

(2) Test using pressure tester
Seal fresh and sea water ports with rubber caps and fill tank completely with water. Replace the filler cap with a pressure tester and pressurize the tank. If a leak is present, the tank cannot be pressurized or it will only be able to retain pressure for a short time.

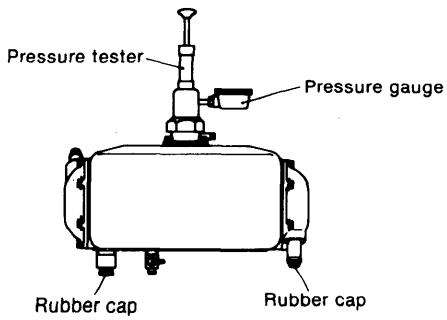

Leakage test using a pressure tester

4. Filler Cap and Subtank (Option)

4-1 Filler cap construction

The filler cap is placed on the fresh water inlet port and is equipped with a pressure control valve.
To attach, place the rocking tab (extension on the attachment section) on the flyneck cam. Then, turn and tighten.
The top seal touches the flynect tap seat while the pressure valve touches the lower seat.

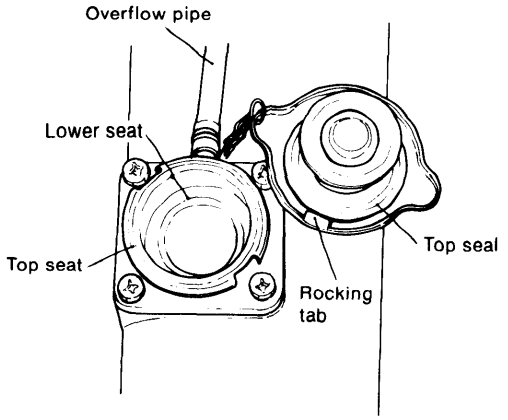

4-2 Filler cap pressure control

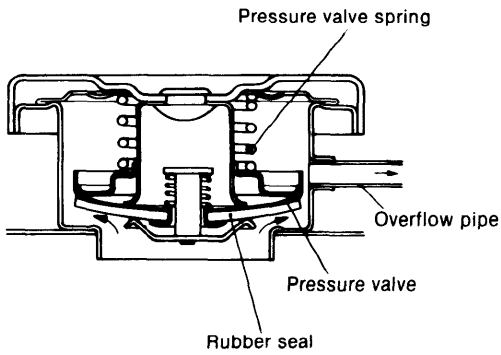

Pressure valve operation

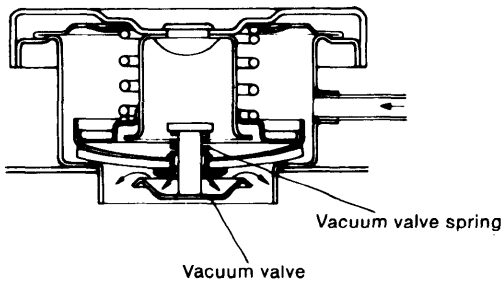

Vacuum valve operation

When cooling system pressure is within the specified range 0.9kg/cm² (12.80 lb/in²), the pressure valve and vacuum valve are tightly closed on their valve seats. When pressure rises, the pressure valve opens and vapor is discharged from the overflow pipe. When water becomes cool and pressure in the system is lower than the atmospheric pressure, the vacuum valve opens and air enters the system through the overflow pipe.
To prevent the pressure valve from opening and the resulting water loss, the cooling system can be equipped with a subtank, described below.

4-3 Filler cap inspection

(1) Remove all deposits and rust, check for damage and wear on the seat contacting surfaces, and check spring from proper functioning. Repair or replace as required.
(2) Tester inspection
Attach adaptor and filler cap to tester.
Increase pressure and if pressure remains constant for six seconds, the cap is normal. If pressure does not increase or does not remain constant for six seconds, check for defects. Repair or replace as required.

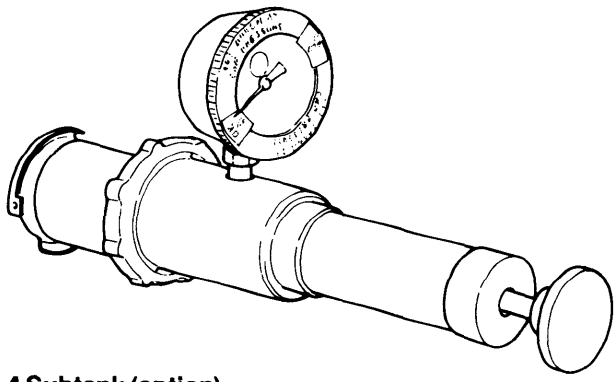

4-4 Subtank (option)

4-4.1 Subtank function

When cooling system pressure rises above 0.9kg/cm² (12.80 lb/in².), the pressure valve opens and vapor is released, reducing the amount of water in the cooling system. The subtank collects this vapor where it condenses. Then, when cooling system pressure falls below atmospheric pressure, the water in the subtank is siphoned back to the main tank.
Use of a subtank is highly recommended, since this allows the engine to be run for longer periods between water replenishment and the need to open the filler cap is eliminated, removing one possible cause of accidents.

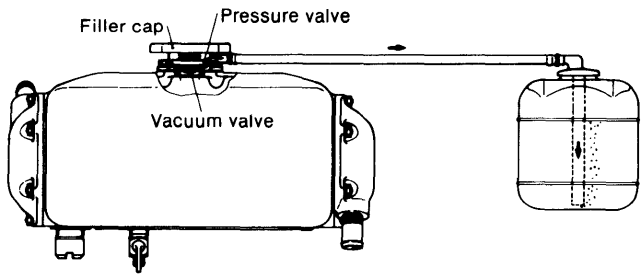

Subtank water quantity

mm (in.)

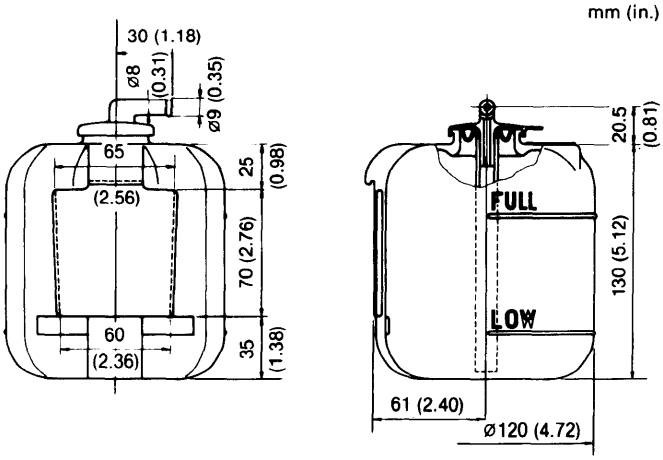

Part no. 120445-44530

Upper limit	0.8 *l*
Lower limit	0.2 *l*

4-4.2 Installation of subtank

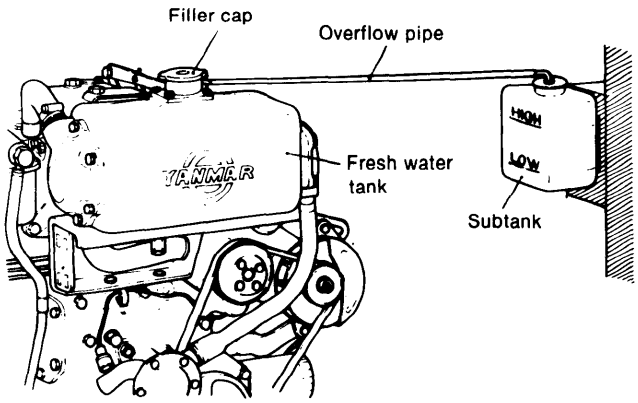

(1) Mount the subtank at the same height as the fresh water tank.
(2) Ensure that the length of the overflow pipe is no more than 1m (39.37 in.), and that it does not break.

NOTE: If a subtank is not used, be careful not to immerse overflow pipe in the bilge, since this can cause bilge water to be siphoned into the cooling system.

4-4.3 Maintenance during use

(1) Check that when the cooling water is cold the level is within the specified range.
(2) Check that the overflow pipe is not broken, and also that the holes are not blocked up.

5. Thermostat

5-1 Construction and operation

The thermostat is located at the inlet port of the fresh water tank. This thermostat is a wax-pellet type, identical to the one on the sea water cooled engine. For construction details, see the description for the sea water cooled engine.

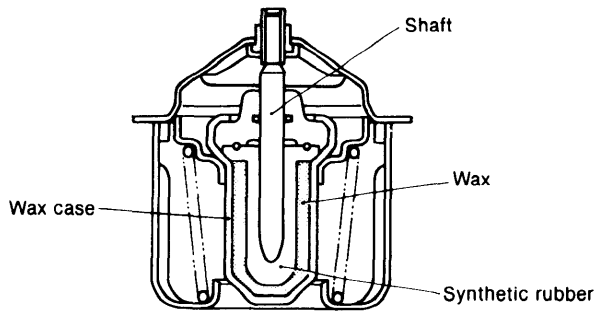

Below 71°C

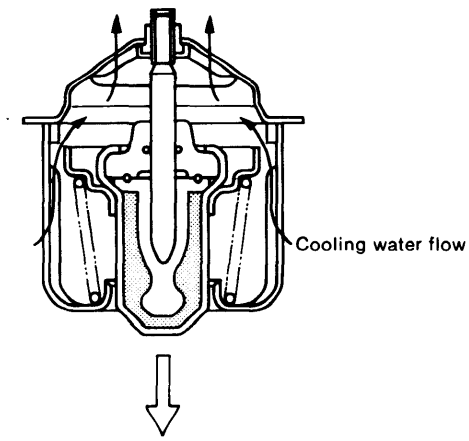

Above 71°C

Thermostat operating temperature

Opening temperature	71°C
Full open temperature	85°C

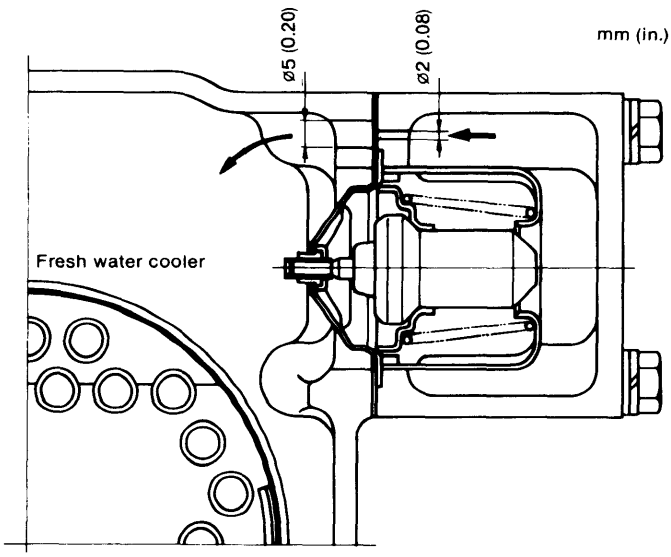

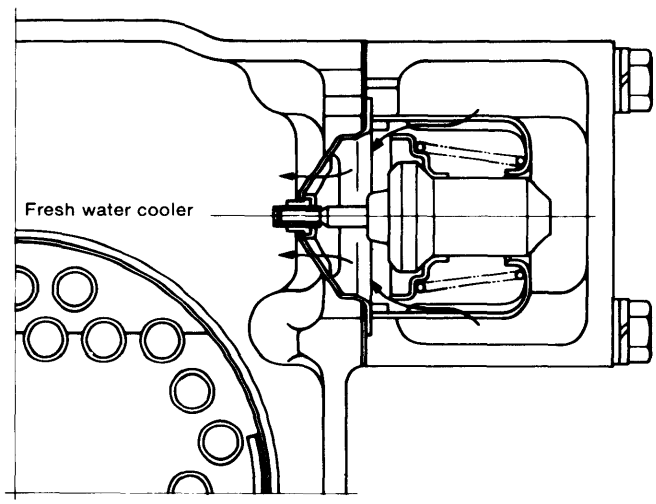

When fresh water temperature is low (just after starting or during low load operation), the thermostat closes, as shown in the figure, and fresh water only enters through the small (ø2mm) hole. Most of the fresh water remains in the cylinder block and head.
When water temperature increases to 71°C, the thermostat opens to allow fresh water to flow into the tank. At 85°C, the thermostat opens to its maximum extent. The entire operation has been carefully planned to maximize efficiency of the centrifugal pump. Note that the ø2mm hole is sufficient to prevent undue temperature rise while the thermostat is closed.

5-2 Thermostat inspection

(1) Remove thermsotat housing (fresh water inlet port) and remove thermostat.
Remove all deposits and rust, check functioning and inspect parts. Replace if performance has deteriorated or if the spring or other parts are excessively corroded, deformed or otherwise unsuitable.

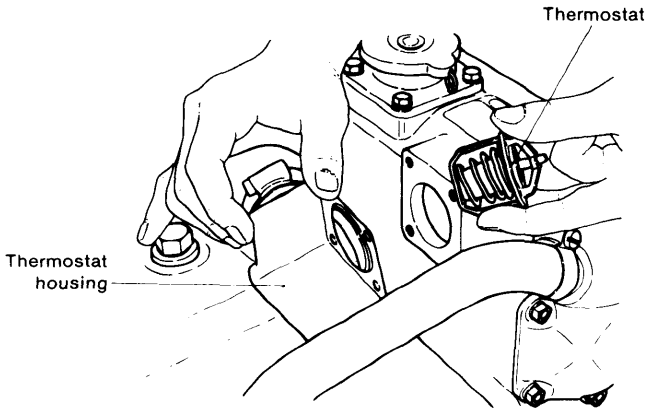

(2) Remove all deposits and corrosion from the thermostat housing. Check for clogging and clean especially in the ⌀2mm hole.

(3) Testing the thermostat
Place the thermostat in a container filled with water. Heat the container with an electric heater. If the thermostat valve begins to open when the water temperature reaches about 71°C and becomes fully open at 85°C, the thermostat may be considered all right. If its behaviour differs much from the above, or if it is found to be broken, replace it.

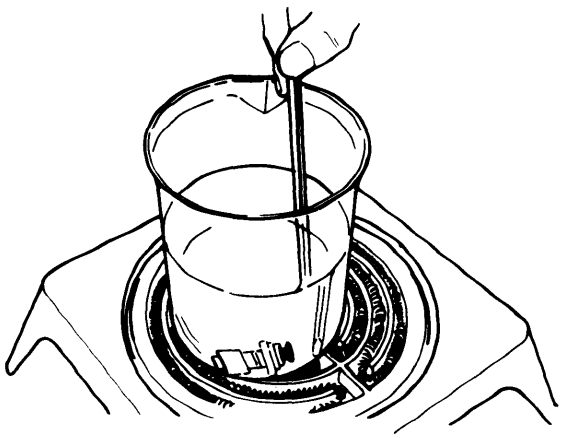

(4) In general, inspect the thermostat every 500 hours of operation. However, always inspect it when the cooling water temperature has risen abnormally and when white smoke is emitted for a long period of time after the engine starts.

(5) Replace the thermostat when it has been in use for a year, or after every 2000 hours of operation.

Part No. code of thermostat	124790-49800

(6) Attaching the thermostat to the colling water system
Before attaching the thermostat to the system, be sure to check its packing and make sure there are no leaks.

6. Anticorrosion Zinc

6-1 Principles

Anticorrosion zinc is installed to prevent electrolytic corrosion by sea water.
When different metals, i.e., iron and copper, are placed in a highly conductive liquid, such as sea water, the iron gradually rusts. The anticorrosion zinc provides protection against corrosion by corroding in place of the sea water pump, fresh water tank and other iron parts. The anticorrosion zinc for fresh water cooling systems is attached on the cover of the sea water inlet port.

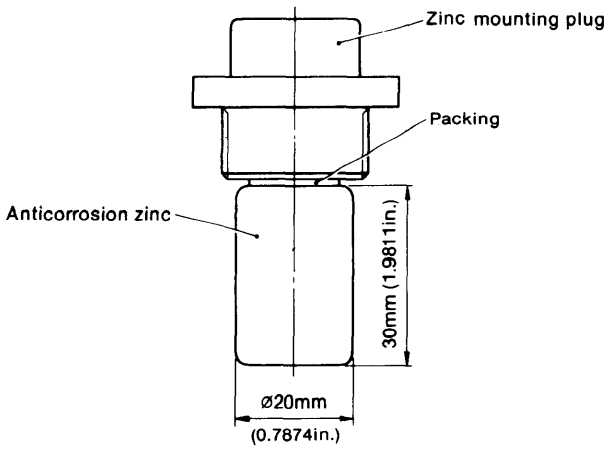

Part no. 27210-200300

6-2 Inspection

Generally, replace the anticorrosion zinc every 500 hours of operation. However, since this period depends on the properties of the sea water and operating conditions, periodically inspect the anticorrosion zinc and remove the oxidized film on its surface.

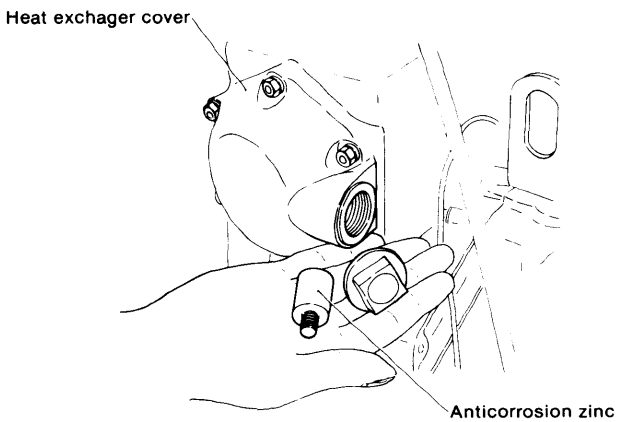

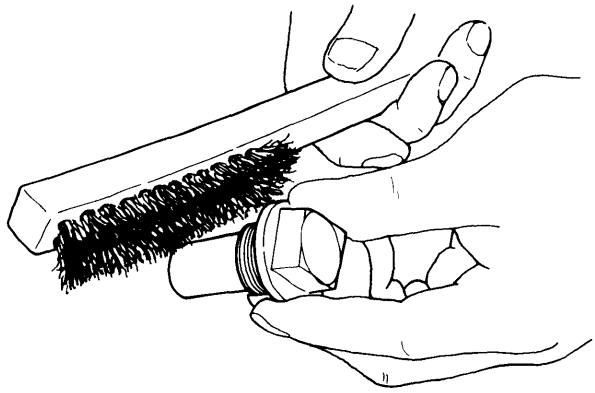

6-3 Replace

Replace the anticorrosion zinc by pulling the old zinc from the zinc mounting plug and screwing in the new zinc.

7. Precautions

7-1 Ventilator

The surface temperature of fresh water cooled engines is higher than sea water cooled engines. Therefore, if the engine room is not well ventilated, engine room temperature can rise to a point where it will adversely influence engine performance.

7-2 Cooling water

(1) Fresh water

Model	Capacity
2QM20F 2QM20Y	6.0 liters
3QM30F 3QM30Y	6.9 liters

Use clean soft water as cooling water. Hard water will cause calcium build-up, poor heat transmission and a drop in the cooling affect; resulting in overheating.

(2) Fresh water tank capacity
Remove the cap from the fresh water cooler, and check the water level. If the water level is below the top of the cooling pipe, add clean soft water up to the iron plate at the bottom of the filler.
If water is added up to the mouth of the fresh water tank, about 50cc of water will overflow from the filler immediately after the engine is started. This is normal, and is caused by the increase in the volume of the water as its temperature rises. If the water filler cap is removed after the engine has been stopped and allowed to cool, the water level will be 2—3cm from the top of the filler. This is also normal, and is caused by the overflow of the unnecessary water as the temperature of the water rises.

(3) Cooling water (fresh water) level check
Check the level of the cooling water (fresh water) before daily operation. A low cooling water level can cause insufficient pump discharge and the accumulation of scale in the heat exchanger.

(4) Cooling water leakage check during operation
Although checking for water and oil leakage during operation is generally necessary, check for fresh water leakage with sepcial care.
Fresh water leakage is directly related to seizing of the engine.

(5) Fresh water replacement
Replace water every 500 hours. Always use an anti-rust agent.
To drain the water, open the cooling water drain cock and remove the water filler cap. If the filler cap is not removed, a vacuum will be created in the water jacket and all the water will not be drained.

(6) Removing the filler cap
Do not attempt to remove the water filler cap at the top of the fresh water tank while the engine is running, or while the engine is still hot after it has been stopped; steam will escape and may cause serious injury. If removal of the filler cap is unavoidable, place a piece of cloth over the cap and turn the cap slowly, making sure you are in a safe position even if steam escapes.

7-3 Antifreeze

(1) Use permanent type antifreeze in the winter. Freezing of the fresh water will damage the heat exchanger, cylinder head and water jacket.

(2) Antifreeze use
1) Before adding antifreeze, clean cooling system and check for leaks.
2) Select mixing ratio according to the following table.

Temperature	−5°C	−10°C	−15°C	−20°C	−25°C	−30°C
Mixing ratio	12%	22%	29%	35%	40%	44%
2QM20Y 2QM20F	0.72ℓ	1.32ℓ	1.74ℓ	2.1ℓ	2.4ℓ	2.64ℓ
3QM30Y 3QM30F	0.83ℓ	1.52ℓ	2.0ℓ	2.42ℓ	2.76ℓ	3.04ℓ

NOTE: The temperature selected in the above table should be 5°C lower than the lowest expected temperature in the area.

NOTE: Check mixing ratio carefully, especially when using premixed coolant.

3) Tighten drain cock and fill cooling system. Then, run engine for approx. 5 to 30 minutes to make sure the solution is well mixed.

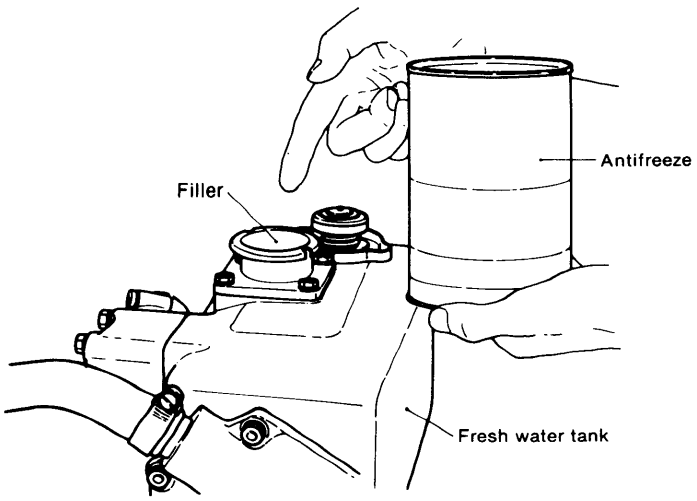

NOTE: Some antifreeze solutions will corrode aluminum. Check carefully before use.

NOTE: When antifreeze protection is no longer necessary, drain water, flush cooling system and refill with fresh water.

7-4 Rust inhibitor

When the fresh water is changed, a rust inhibitor must be added to the new water to prevent rusting.

Rust inhibitor: Fresh water = 1:10

Flush cooling system with fresh water, fill with proper rust inhibitor and then top-off cooling system with fresh water.

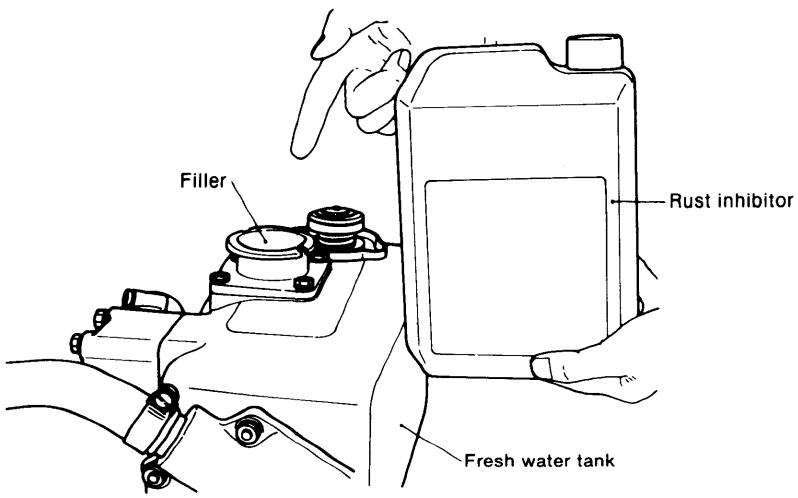

7-5 Idling the engine when stopping

Always idle the engine for ten minutes immediately after starting and prior to stopping. Be sure to idle the engine adequately, especially before stopping. Stop the engine only after its temperature has dropped sufficiently. If the engine is stopped while hot, the hot fresh water will cause the temperature of the water in the heat exchanger pipe to rise, causing a build-up of calcium deposits in the pipe and a drop in the cooling affect.

7-6 Cleaning the heat exchanger tube

If the heat exchanger tube through which the fresh water flows becomes extremely dirty, the cooling affect will deteriorate.

If the C.W. warning lamp lights periodically when the engine is run at the rated output, clean the tube in the fresh water tank with a cleaning agent and then flush the accumulated scale produced by cooling the fresh water from the tube.

CHAPTER 8

CHAIN-OVERDRIVE HAND-OPERATED SYSTEM

1. Chain-Overdrive Hand-Operated System 1

1. Chain Overdrive Hand-Operated System

The engine is normally started with its electric starter. It can also be started manually with the chain-overdrive hand-operated system if the electric starter malfunctions. For manual starting, the start handle is turned by hand. This system is also useful when mechanical adjustments are required.

1-1 Construction

The hand-operated system uses a chain, and large and small sprockets. Rotation of the start handle is transmitted from the large sprocket through the chain to the small sprocket, which drives the fuel supply pump drive gear to start the engine.
The roller clutch at the end of the gear shafts engages only when the shaft is rotated in the proper direction, i.e. when the shaft is rotated in reverse the roller clutch will not engage. As a result, the driver gear shaft runs free when the engine starts.

1-1.1 2QM20 (H), 3QM30 (H)
(Starting device for sea water cooling)

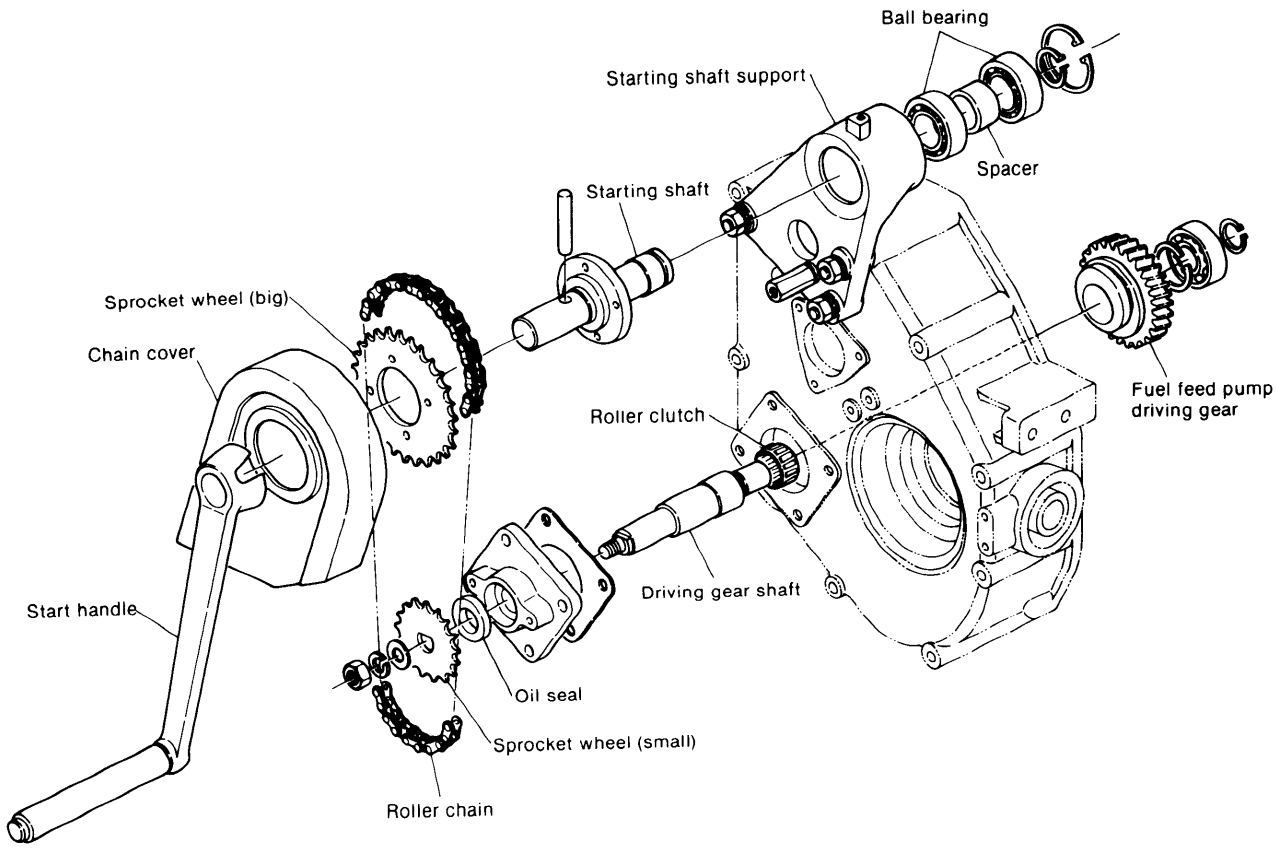

1-1.2 2QM20F, 3QM30F
(Starting device for fresh water cooling)

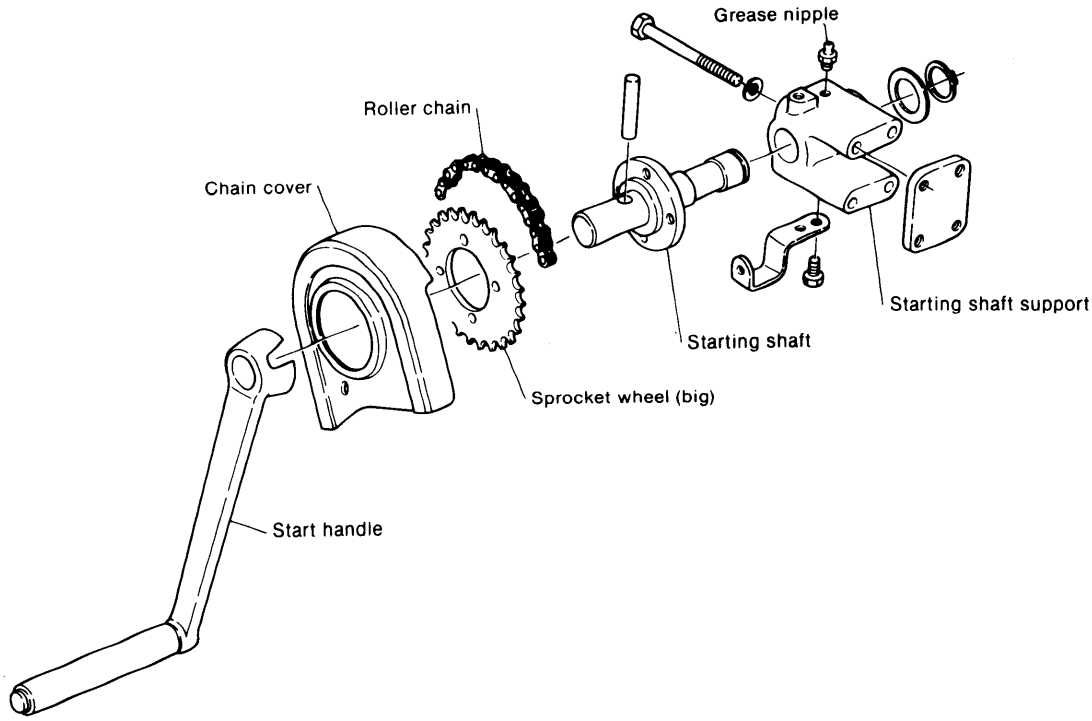

1-2 Specification

$$\text{Speedup ratio} = \frac{\text{rotation of crankshaft}}{\text{rotation of starting shaft}} = 1.73$$

	Number of teeth
Sprocket wheel (small)	15
Sprocket wheel (big)	26
Fuel feed pump driven gear	29
Camshaft gear	58
Crankshaft gear	29

1-3 Roller chain

mm

A	12.70
B	7.77
C	3.4
Length of roller chain	67 links

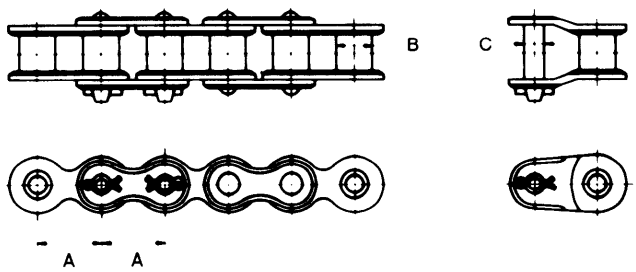

1-4 Disassembly and Reassembly

1-4.1 Disassembly

(1) Remove the chain cover.
(2) Remove the linkage of the chain at the connecting section, and detach the chain from the sprocket wheel.
(3) Remove the starting shaft and starting shaft support as an assembly.
(4) Pull the sprocket wheel (big) and ball bearings from the starting shaft support.
(5) Remove the parallel pin and sprocket wheel (big) from the starting shaft.
(6) Remove the sprocket wheel (small) from the driving gear shaft.
(7) Remove the driving gear shaft cover and oil seal from the gear case.
(8) Remove the gear case assembly from the engine body.
(9) Pull out the driving gear shaft and remove the roller clutch.

1-4.2 Reassembly

Reassemble in the reverse order as disassembling.

NOTE: Pay attention to the direction of sprocket and the tension of the sprocket.

CHAPTER 9

REDUCTION AND REVERSING GEAR

A. For model 2QM20, 3QM30
1. Construction 9-A-1
2. Installation and Operation 9-A-8
3. Handling the Reduction and Reversing Gears 9-A-9
4. Inspection and Servicing 9-A-10
5. Disassembly 9-A-12
6. Reassembly 9-A-15

B. For model 2QM20H
1. Construction 9-B-1
2. Installation 9-B-5
3. Operation and Maintenance 9-B-6
4. Inspection and Servicing 9-B-7
5. Disassembly 9-B-12
6. Reassembly 9-B-16

C. For model 3QM30H
1. Construction 9-C-1
2. Installation 9-C-5
3. Operation and Maintenance 9-C-6
4. Inspection and Servicing 9-C-7
5. Disassembly 9-C-12
6. Reassembly 9-C-15

[A] For model 2QM20, 3QM30

1. Construction

1-1 Specifications

			2QM20		3QM30	
Nomenclature			YP-7M		YP-10M	
Reduction system			One-stage reduction spur gear			
Reversing system			Constant mesh gear			
Clutch			Wet type single-disc mechanically operated			
Reduction ratio	Forward		2.20	3.21	2.20	3.21
	Reverse		2.30	3.46	2.30	3.46
Direction of rotation	Input shaft		Counterclockwise as viewed from stem			
	Output shaft	Forward	Clockwise as viewed from stern			
		Reverse	Counterclockwise as viewed from stern			
Lubricating oil			Same as Engine Side Lub. Oil			
Lubricating oil capacity			0.8ℓ		1.2ℓ	

Remarks: The engine model 2QM20 B is equipped with the YP-10M clutch same as the engine model 3QM30.

1-2 Drawing

[Model YP-7M]

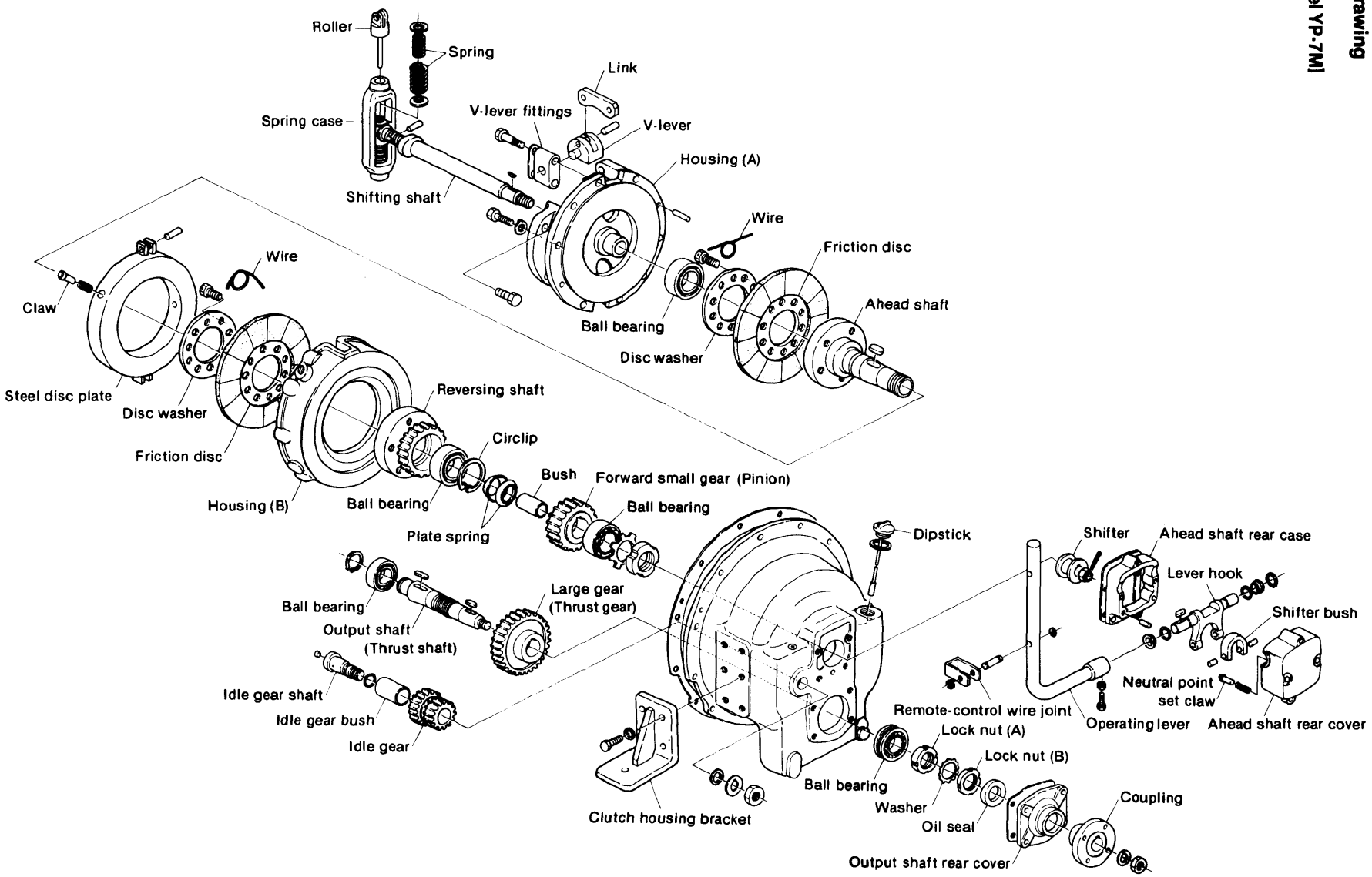

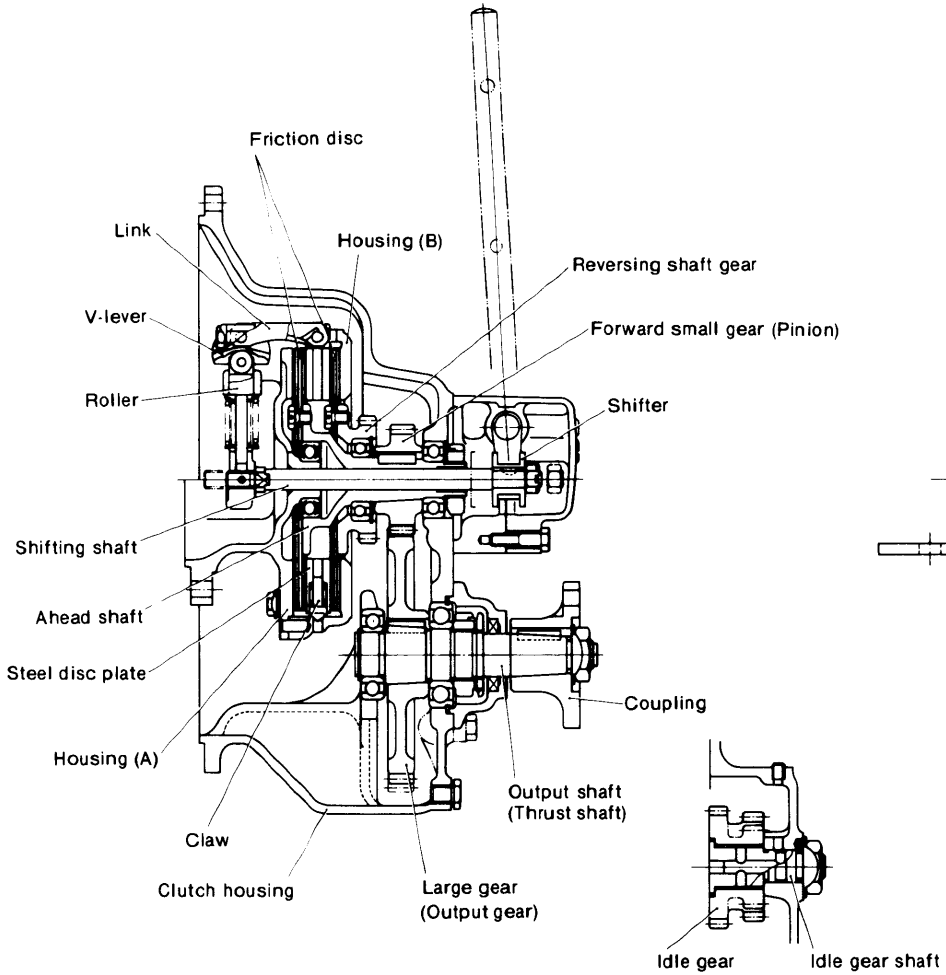
Friction disc
Link
Housing (B)
Reversing shaft gear
V-lever
Forward small gear (Pinion)
Roller
Shifter
Shifting shaft
Ahead shaft
Steel disc plate
Coupling
Housing (A)
Output shaft
(Thrust shaft)
Claw
Clutch housing
Large gear
(Output gear)
Idle gear
Idle gear shaft

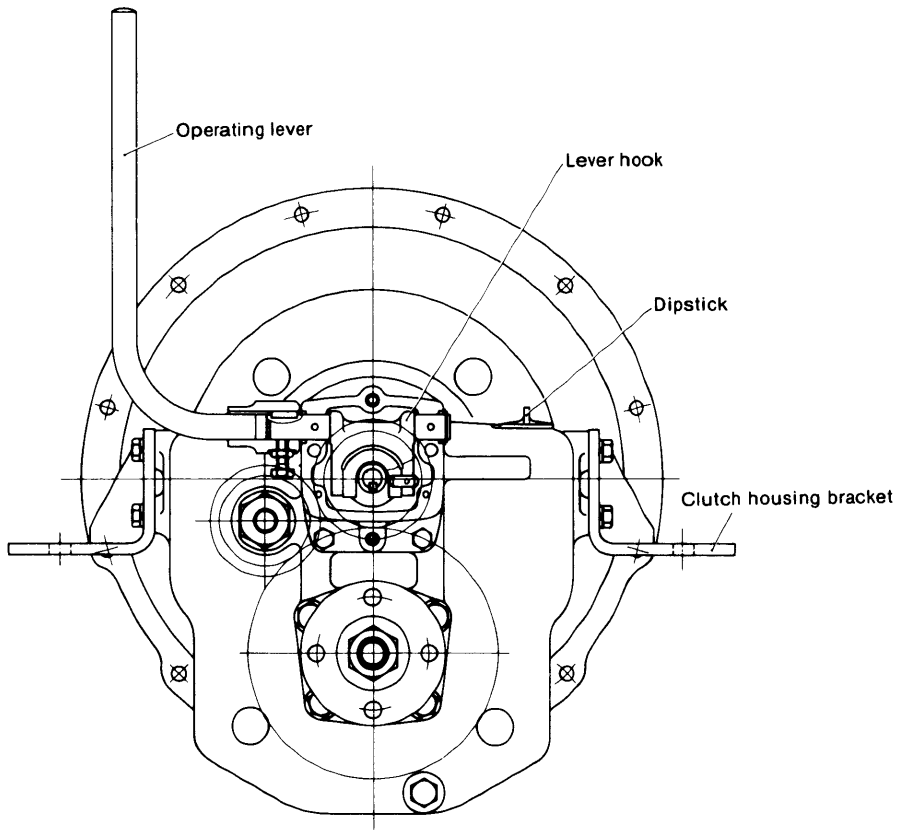
Operating lever
Lever hook
Dipstick
Clutch housing bracket

[Model YP-10M]

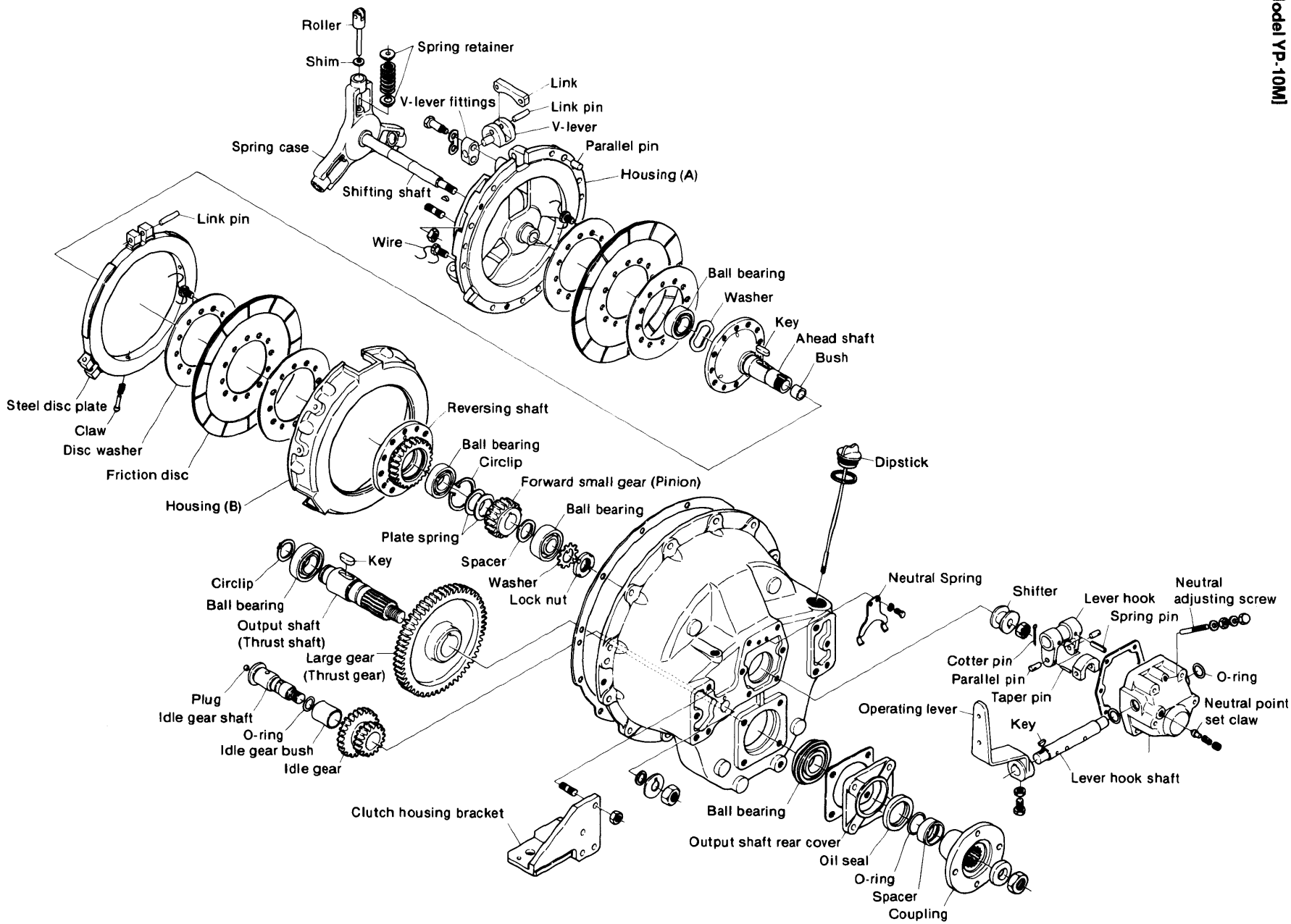
Roller
Shim
Spring retainer
Link
V-lever fittings
Link pin
V-lever
Spring case
Parallel pin
Housing (A)
Shifting shaft
Link pin
Wire
Ball bearing
Washer
Key
Ahead shaft
Bush
Steel disc plate
Claw
Disc washer
Friction disc
Housing (B)
Reversing shaft
Ball bearing
Circlip
Forward small gear (Pinion)
Ball bearing
Plate spring
Spacer
Washer
Lock nut
Dipstick
Key
Circlip
Ball bearing
Output shaft
(Thrust shaft)
Large gear
(Thrust gear)
Plug
Idle gear shaft
O-ring
Idle gear bush
Idle gear
Clutch housing bracket
Ball bearing
Output shaft rear cover
Oil seal
O-ring
Spacer
Coupling
Neutral Spring
Shifter
Lever hook
Neutral
adjusting screw
Spring pin
Cotter pin
Parallel pin
Taper pin
O-ring
Operating lever
Key
Neutral point
set claw
Lever hook shaft

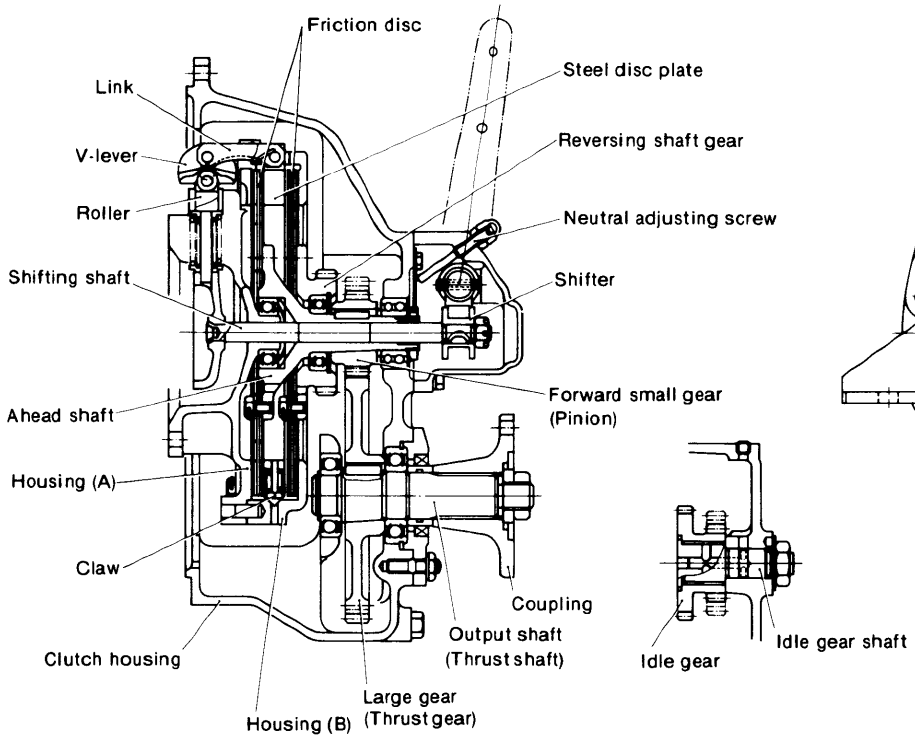
Friction disc
Link
V-lever
Roller
Shifting shaft
Ahead shaft
Housing (A)
Claw
Clutch housing
Housing (B)
Large gear
(Thrust gear)
Output shaft
(Thrust shaft)
Coupling
Steel disc plate
Reversing shaft gear
Neutral adjusting screw
Shifter
Forward small gear
(Pinion)
Idle gear
Idle gear shaft

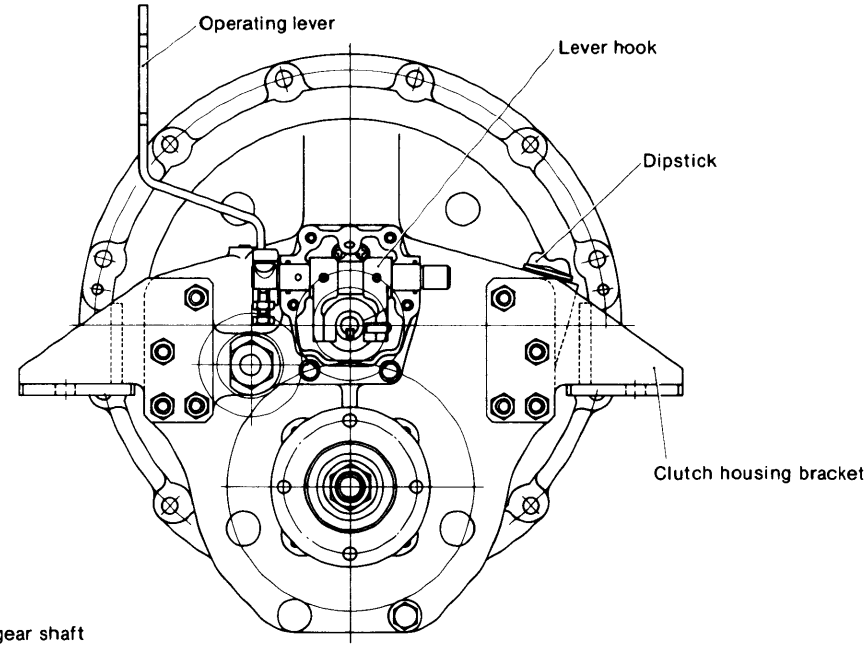
Operating lever
Lever hook
Dipstick
Clutch housing bracket

1-3 Power transmission system

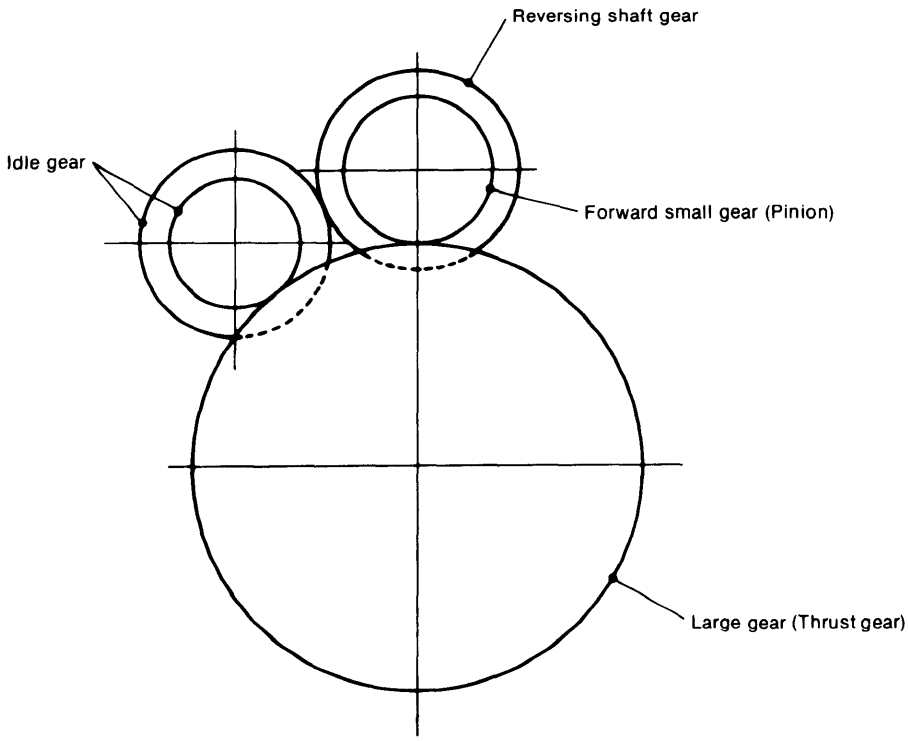

This drawing is viewed from stem

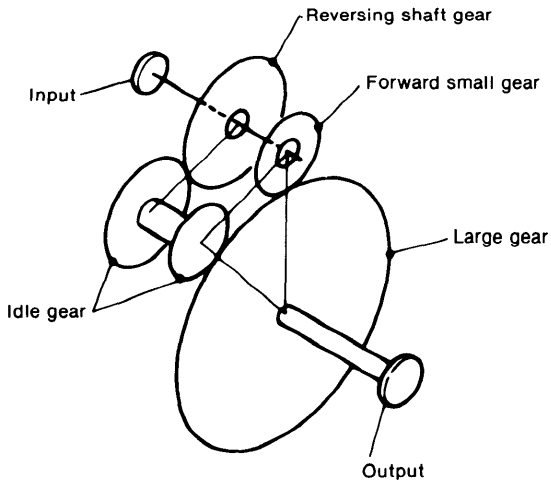

Forward			Reverse			
Number of teeth		Reduction ratio	Number of teeth			Reduction ratio
Forward small gear	Large gear		Reversing shaft gear	Idle gear	Large gear	
25	55	55/25 = 2.20	27	26, 23	55	26/27 × 55/23 = 2.30
19	61	61/19 = 3.21	27	26, 17	61	26/27 × 61/17 = 3.46

1-4 Clutch Transmission Mechanism

The four gears in the reduction reversing gear (one of which is a monoblock large and small gear) are usually meshed with each other and turn whenever the engine is operating.

1-4.1 When moving ahead

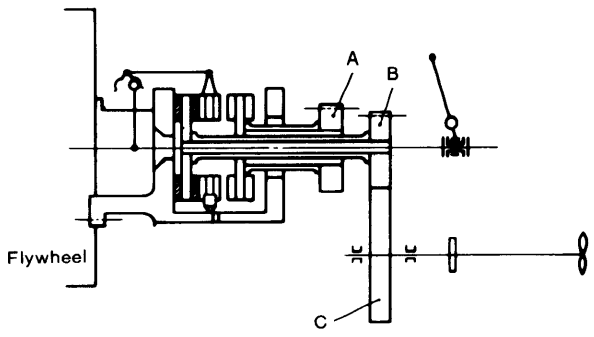

There are two friction discs. The power is transmitted to the left friction disc, then from gear A to gear C to drive the propeller shaft.

1-4.2 When moving astern

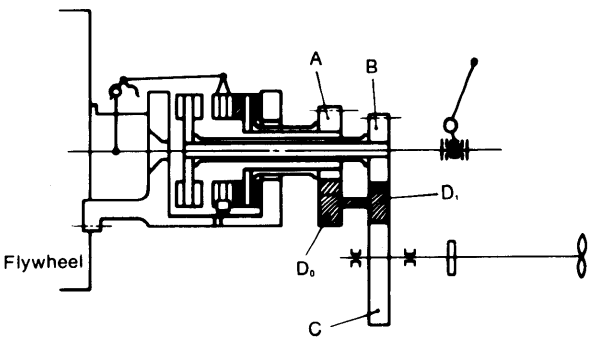

The power is transmitted to the right friction disc, and in turn to gear A, gear D (gears D_0 & D_1) and gear C, and drives the propeller shaft.
Thus, by operating a gear lever, the right and left friction discs are used as appropriate, depending upon the transmission mode of ahead or astern. All gears are constant meshed type, and the friction discs normally turn in opposite directions except in their neutral position.

1-4.3 When in neutral position:

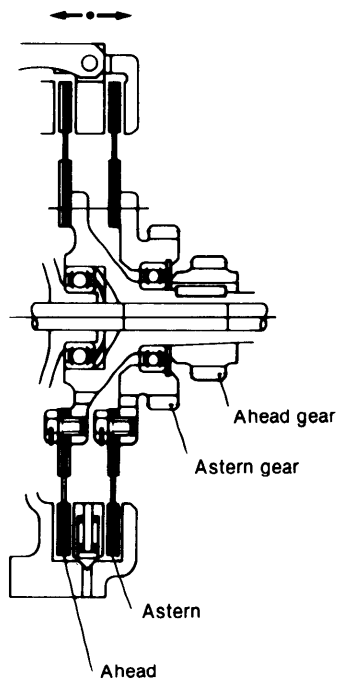

The two friction discs are free from the friction plate, and gears A, B, C and D are all stationary even when the engine is running. A neutral positioning piece is furnished so as not to transmit power between the friction plate and the friction discs. Therefore, "accompaniment" does not occur with the propeller shaft while the mechanism is in its neutral position.

2. Installation and Operation

2-1 Clutch Case Alignment

When replacing parts of the fly-wheel housing or clutch case, carry out the following procedures for the clutch case alignment, which should also be applied in case of deviations in the alignment at the time of mechanical repair and servicing.

Permissible deviation of alignment for clutch hole against crank shaft: 0.2mm (Reading value of gauge)

(1) Fix the clutch case temporarily to the fly-wheel housing.
(2) Attach the pick dial with a magnet to the end of the crank shaft and set the gauge.

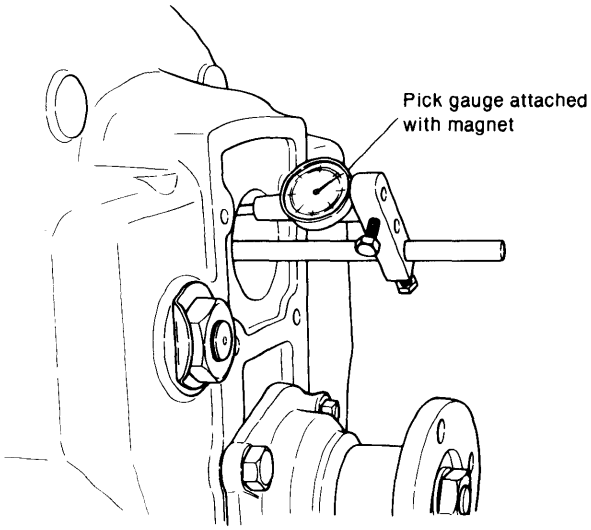

(3) Rotate the crankshaft to read deflection of the gauge.
(4) Set the position of the clutch case so that the deflection of the gauge is less than or equal to 0.2mm.
(5) Set the knock pin to fix the position.

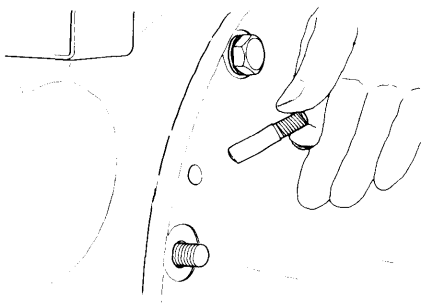

2-2 Remote control

Both 2QM20 and 3QM30 are designed for remote control using push-pull cables.
With model 2QM20 you can control levers either on the engine or remotely via mechanical linkage.

2-2.1 Action of the lever

(1) 2QM20

mm(in.)

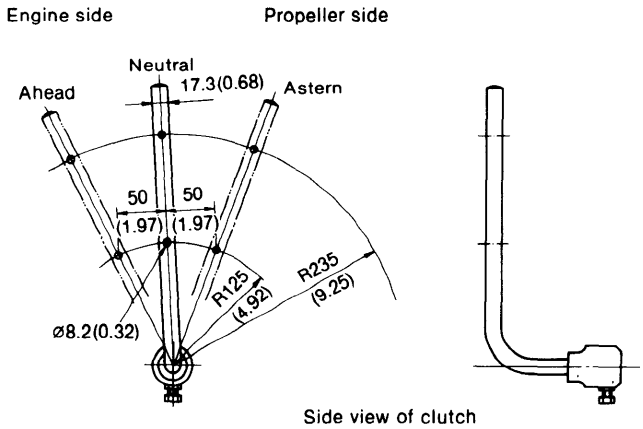

(2) 3QM30

mm(in.)

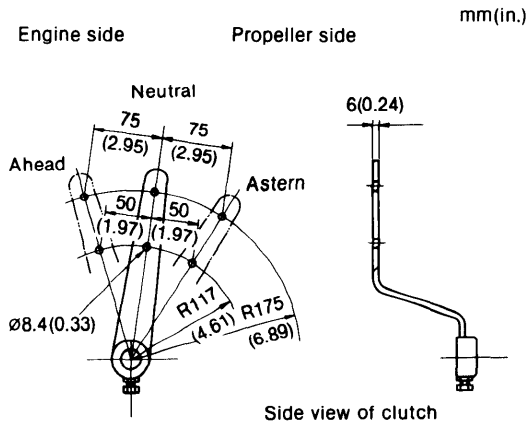

3. Handling the Reduction and Reversing Gears

3-1 Adjustments

3-1.1 Adjusting the adjusting screw for clutch neutral position (3QM30)

(1) Remove the cap nut on the upper inclined surface of the clutch forward shaft gear box and loosen the clamp nut.
(2) Operate the engine, and with the operating lever in the neutral position, turn the neutral position adjusting screw clockwise or counterclockwise until the output shaft coupling stops rotating (about 1/2 or 1 full).
(3) After making sure the thrust shaft coupling will not rotate forward or backward, tighten the clamp nut.
(4) After tightening the clamp nut, securely tighten the cap nut.
(5) Too much tightening may break the inside spring. Care should be exercised.

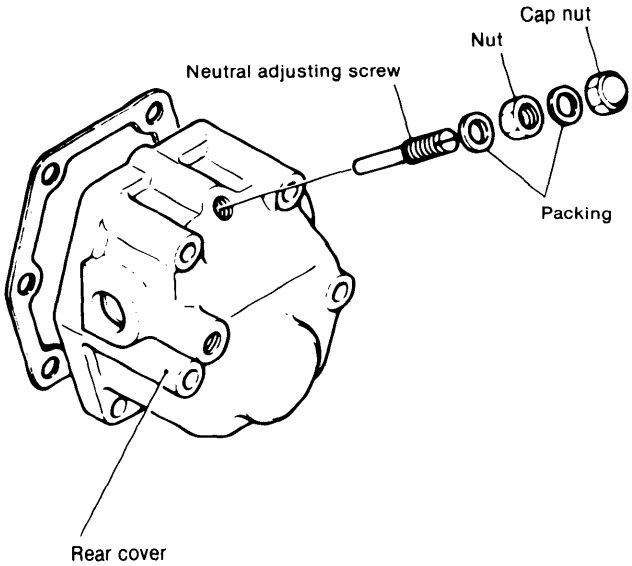

4. Inspection and Servicing

4-1 Condition of clutch housing

1. Check the clutch case for cracks using a test hammer and, if necessary, inspect by color-check. If cracks are noted, replace it with new one.
2. Check each bearing housing for burn damage. If any damage is detected, measure the inside diameter. If the inside diameter has reached the wear limit, replace the housing.

4-2 Condition of each bearing

1. Check each bearing for damage and rust. If a bearing is rusty or its balls, retainer, etc. are damaged, replace.
2. Smooth rotation
   If the rotation of a bearing is uneven or produces noise, replace it with a new one.

4-3 Condition of each gear

1. Damaged tooth surface
   Check the tooth surface of each gear for cracks, scratches and pitching. Replace when serious damage is found.
2. Bearing of tooth surface
   Check the tooth surface of each gear for bearing.
   If the bearing is less than 70% of the face width, find out why this has happened, and, if necessary, replace the gear. Neither the tooth top nor the tooth flank should have any bearing.
3. Check the fitted part of shafts or key grooves for cracks and burn damage and replace, when needed.
4. Gear backlash

mm (in.)

	Standard value
Forward gear and idler gear	
Reverse gear and idler gear	
Idler gear and large gear	

Replace the gear when gear noise becomes too loud.

4-4 Friction disk

1. Check the friction disk for cracks, burn damage or fracture, and repair any damage. Replace all discolored or seriously damaged friction disks.
2. Check the friction disk for wear.
   If its thickness is less than the values listed below, replace.

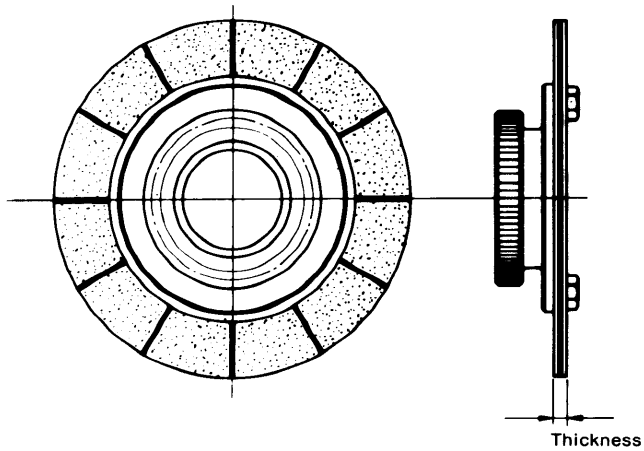

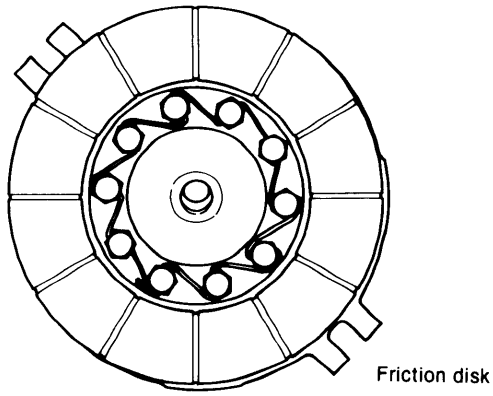

mm (in.)

	Standard value	Wear limit value
Thickness of friction disk	$6^{+0.3}_{0}$ (0.2362~0.2480)	4.5 (0.1772)

4-5 Friction disk and neutral position holding pawl.

1. Check the friction disk and neutral position holding pawl for burn or other damage. If they are seriously damaged, replace.

4-6 Clutch housing A and clutch housing B

1. Check the friction surface of the clutch housing for cracks, damage, seizure, etc. Repair any damage. If the housing is cracked or seriously damaged, replace.

4-7 Clearance between idle gear shaft and bushing

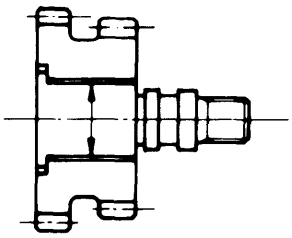

mm (in.)

	Standard dimensions	Clearance at assembly	Maximum allowable clearance
Outside diameter of idle gear shaft	ø28 (1.1024)	0.03 ~ 0.071 (0.0012 ~ 0.0028)	0.10 (0.0039)
Inside diameter of bush	ø28 (1.1024)		

5. Disassembly

5-1 Clutch Assembly

(1) Remove the nut and the shifter.

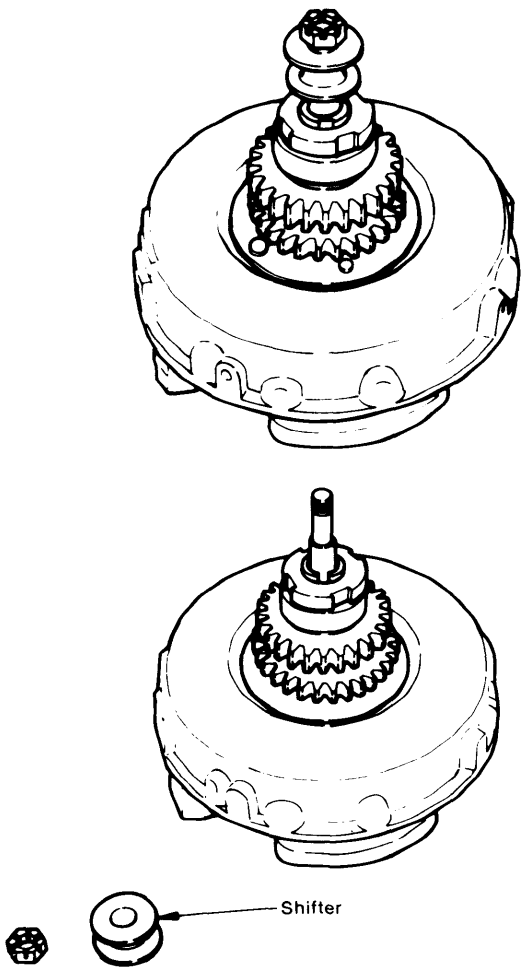

(2) Remove the lock nuts.

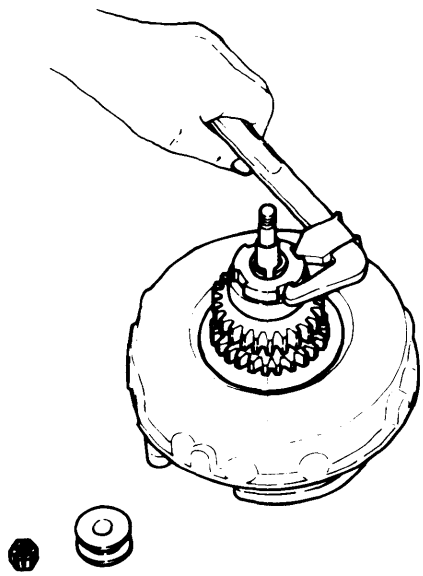

(3) Remove the ball bearing.

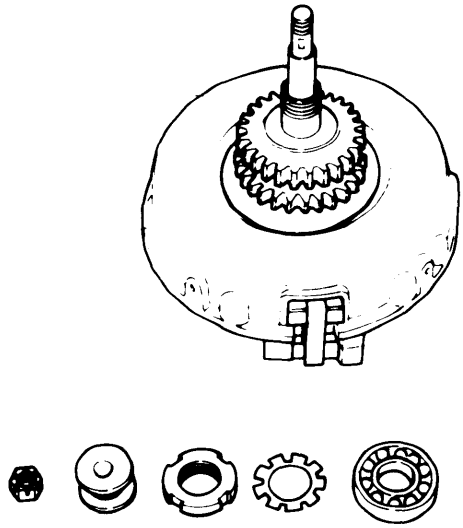

(4) Remove the housing (B).
Positioning needles and springs (four units each).

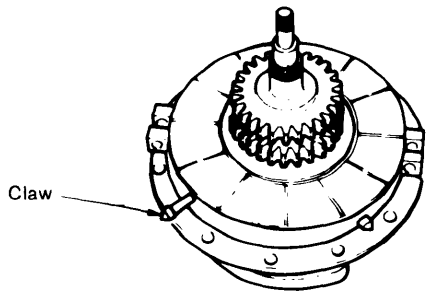

(5) Pull out the link pin.
(6) Remove the ahead & astern friction plate assembly.

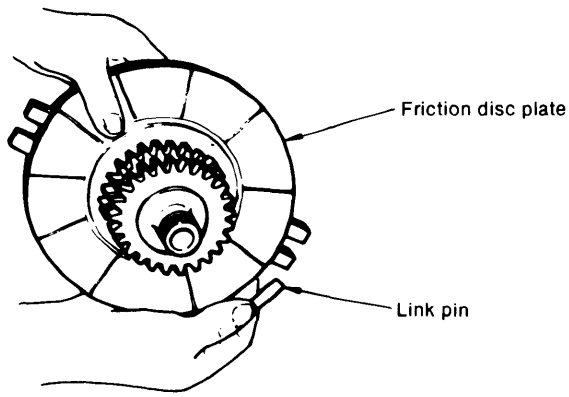

(7) Take out the shifting shaft.
(8) Take out the ahead gear.

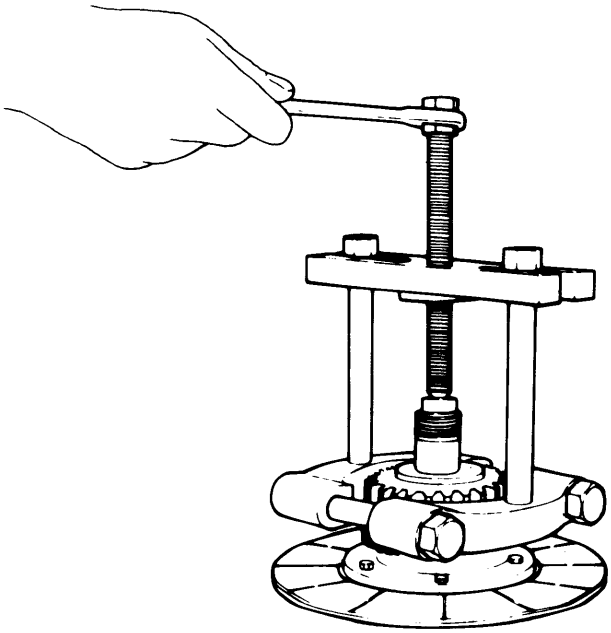

(9) Remove the ahead shaft, friction plate assembly and steel plate.
Check each friction plate and steel plate for defects.
(10) Remove the ahead and astern friction plates.

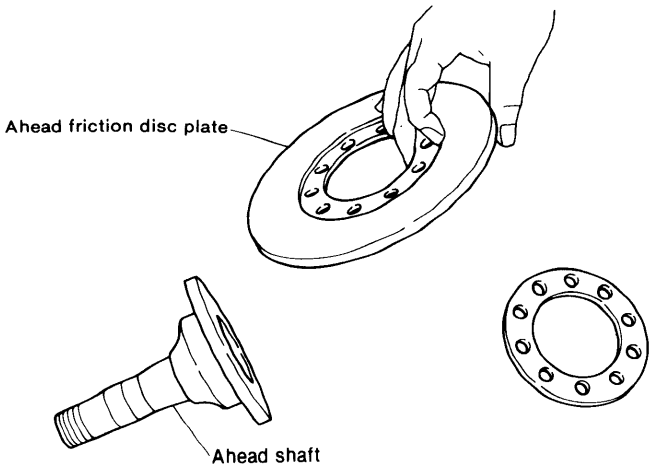

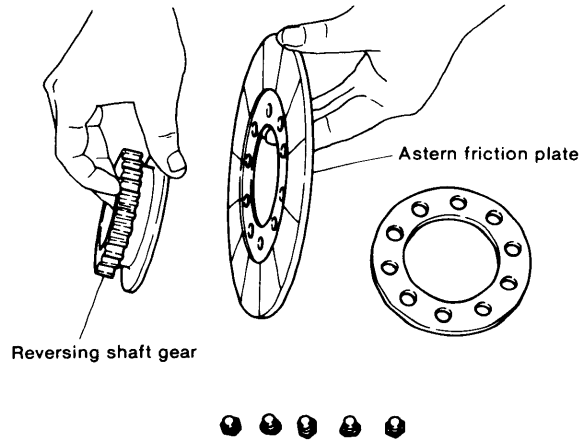

5-2 Idle Gear

(1) Straighten the bend washer and detach the lock nuts.

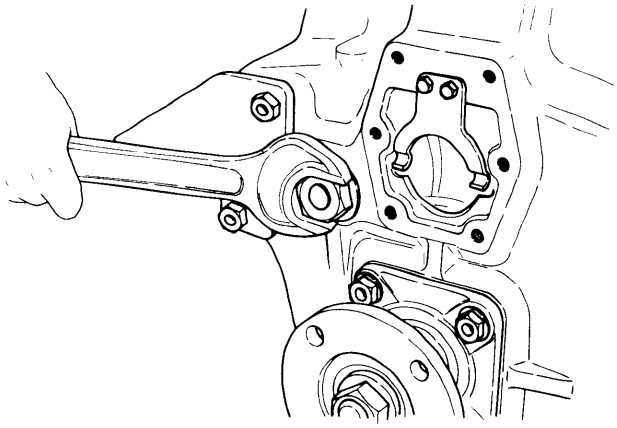

(2) Remove the washer, O-ring and idle gear.

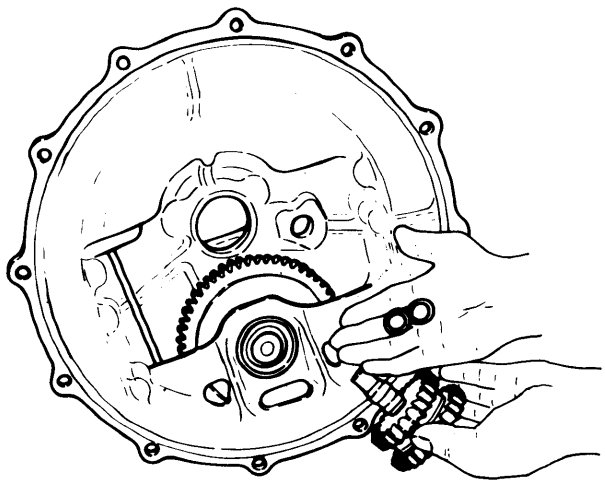

5-3 Thrust shaft

(1) Pull out the coupling.

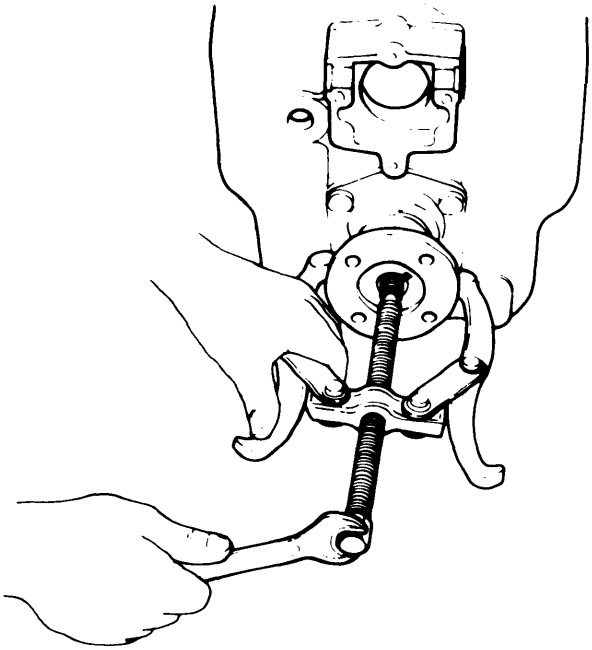

(2) Detach the key.
(3) Remove the rear cover.
Check for damage of the oil seal.

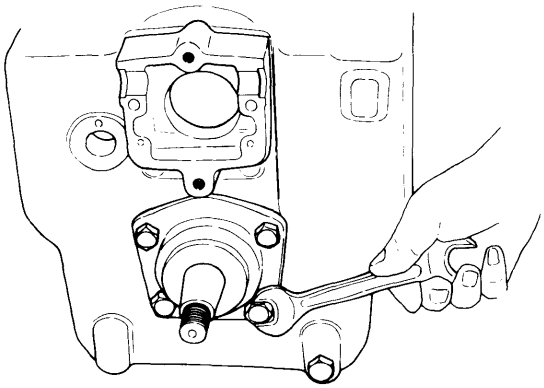

(4) Remove lock nuts (A), (B) and the bend washer.

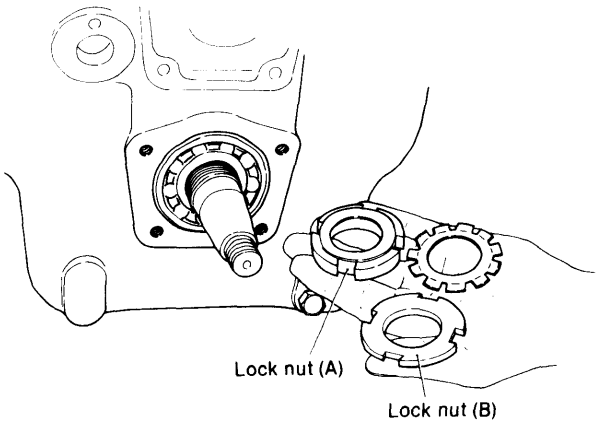

(5) Pull out the thrust shaft.
(6) Detach the final gear.
Development of Clutch Reduction part.

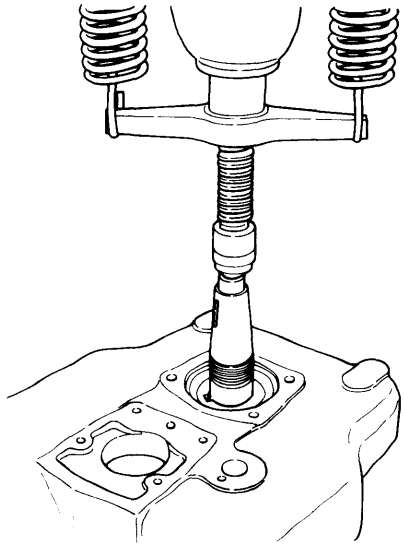

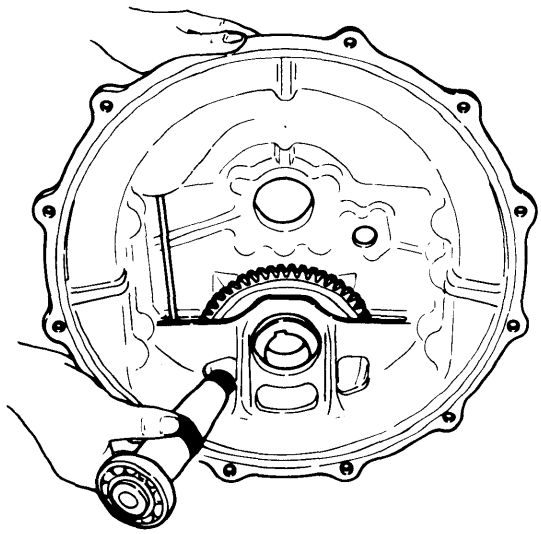

6. Reassembly

6-1 Thrust shaft

(1) Put the final gear in the clutch case.
(2) Mount a bearing checking clip on the thrust shaft.
- Confirm that the clip is closely set in the groove of the shaft.

(3) Pass the thrust shaft through the final gear.

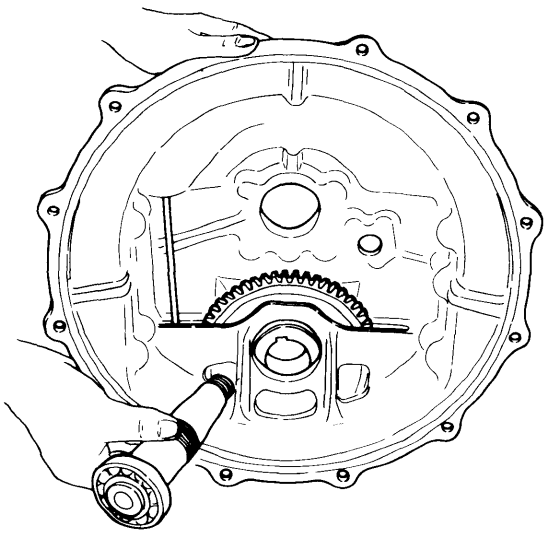

(4) Insert the bearing and fasten the lock nut (A).

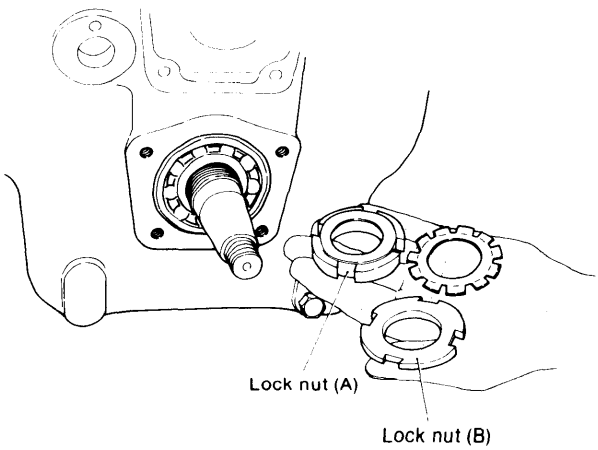

(5) Insert the bend washer and fasten the lock nut (B). Bend the washer toward both lock nuts (A) and (B).
(6) Install the rear cover.
(7) Install the coupling.
- Bend the washer.
- Confirm the rotational functioning of the thrust shaft.

6-2 Idle gear

(1) Pass the idle shaft through the idle gear.
(2) Install the idle shaft and gear housing on the clutch case.
(3) Fit the O-ring, washer and bend washer to the idle shaft.
(4) Fasten the lock nut.
- Bend the washer
- Confirm the rotational functioning of each shaft and gear after assembly.

6-3 Clutch structure

(1) Fit the ahead disc plate and astern disc plate to the ahead shaft and astern gear respectively, making sure that the connecting wire is passed through toward the bolt-fastening direction.

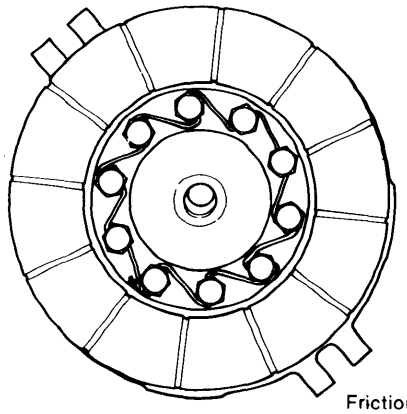

(2) Assemble the ahead shaft disc plate and astern gear disc plate with the steel plate between.
(3) Install the foreward gear.
(4) Pass the shifting shaft through the housing (A).
(5) Install the ahead/astern disc plate device.
(6) Fit the link pin.
(7) Insert the positioning needles and springs at 4 places on the steel plate.
(8) Install the housing (B)
(9) Fit the ball bearings.
(10) Attach the bend washer and lock nuts.
- Use a new bent washer.
- Make sure after bending that the washer does not hamper the function of the bearings.

(11) Fit the shifter nut and bend the split cotter pin.
- Use a new split cotter pin.

(12) After assembly, confirm that the ahead and astern gears rotate lightly.

[B] For model 2QM20H

1. Construction

1-1 Construction

The Kanzaki-Carl Hurth KBW10 reduction reversing gear was developed jointly by Kanzaki Precision Machine Co., Ltd., a subsidiary of Yanmar and one of Japan's leading gear manufacturers, and Carl Hurth Co.

The KBW10 consists of a multi-disc clutch and reduction gear housed in a single case. It is small, light, simply constructed and extremely reliable.

*The force required to shift between forward and reverse can be controlled by a cable type remote control system much smaller and simpler than other types of reduction reversing gears.

*The friction discs are durable sinter plates, and the surface of the steel plates are corrugated in a sine curve shape to ensure positive engagement and disengagement and minimum loss of transmission force.

*Because of the special construction of this gear, the optimum pressure is automatically applied to the clutch plate in direct proportion to the input shaft torque.

1-2 Specifications

Nomenclature			KBW10
Reduction system			One-stage reduction, helical gear
Reversing system			Constant mesh gear
Clutch			Wet type multi-disc, mechanically operated
Reduction ratio	Forward		2.14, 2.83
	Reverse		2.50, 2.50
Direction of rotation	Input shaft		Counterclockwise as viewed from stern
	Output shaft	Forward	Clockwise as viewed from stern
		Reverse	Counterclockwise as viewed from stern
Lubricating oil			DEXRON•ATF
Lubricating oil capacity			0.6ℓ

1-3 Power transmission system

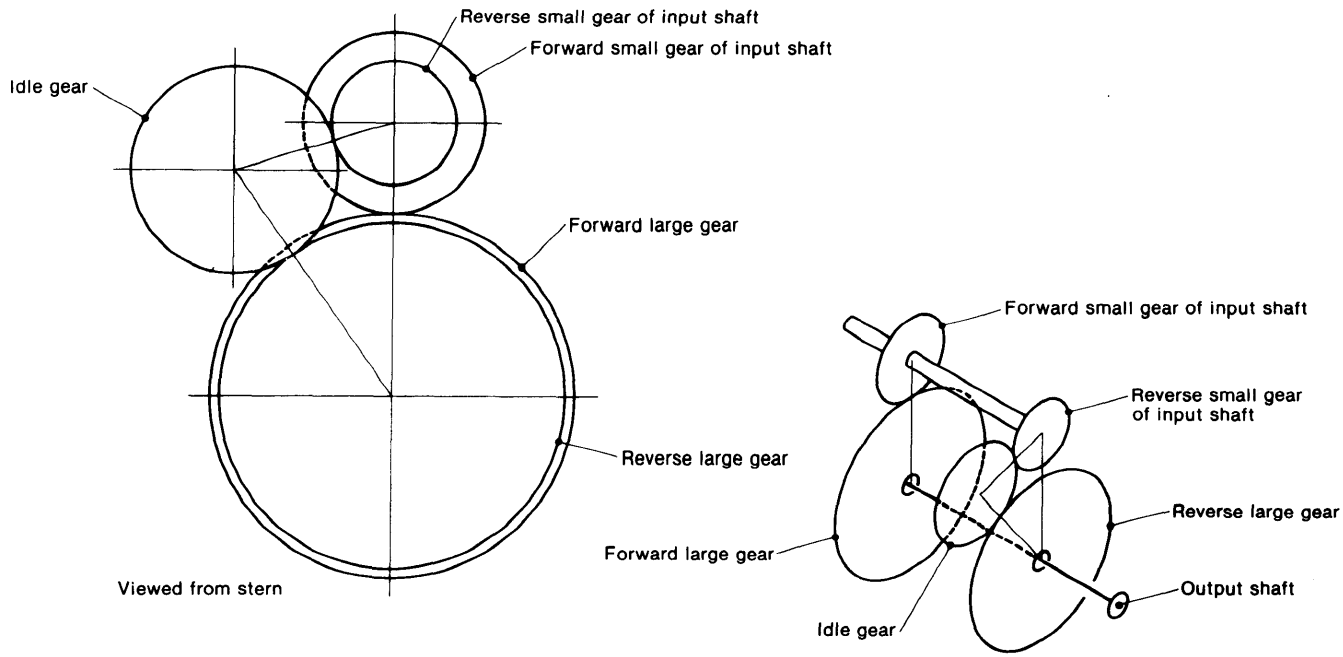

Forward			Reverse			
Number of teeth		Reduction ratio	Number of teeth			Reduction ratio
Forward small gear of input shaft	Forward large gear		Reverse small gear of input shaft	Idle gear	Reverse large gear	
22	47	47/22 = 2.14	18	25	45	45/18 = 2.50
18	51	51/18 = 2.83				

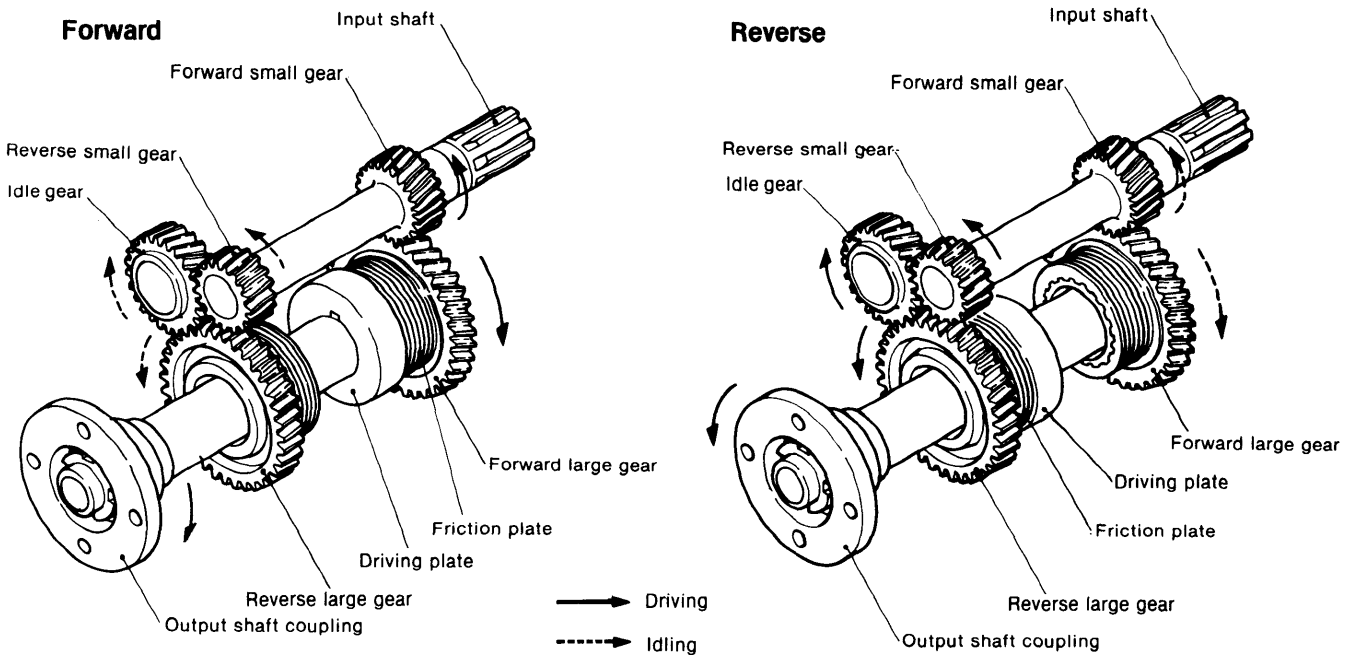

1-4 Drawing

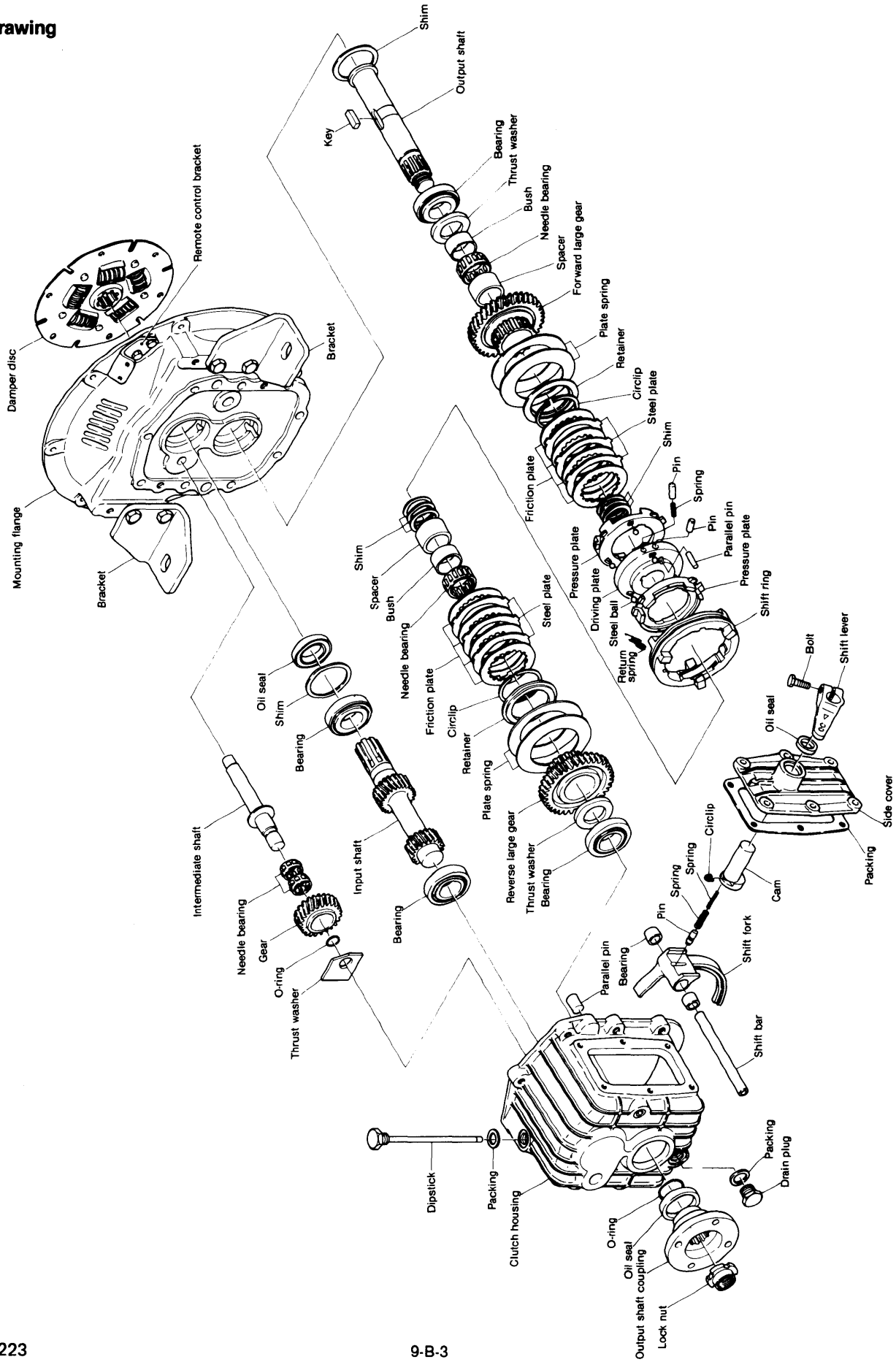
Shim
Output shaft
Key
Bearing
Thrust washer
Bush
Needle bearing
Spacer
Forward large gear
Plate spring
Retainer
Circlip
Steel plate
Shim
Pin
Spring
Pin
Parallel pin
Pressure plate
Pressure plate
Shift ring
Friction plate
Driving plate
Steel ball
Return spring
Remote control bracket
Damper disc
Bracket
Mounting flange
Bracket
Shim
Spacer
Bush
Needle bearing
Friction plate
Circlip
Retainer
Plate spring
Steel plate
Reverse large gear
Thrust washer
Bearing
Oil seal
Shim
Bearing
Intermediate shaft
Needle bearing
Gear
O-ring
Thrust washer
Input shaft
Bearing
Bolt
Shift lever
Oil seal
Side cover
Packing
Circlip
Spring
Spring
Pin
Cam
Shift fork
Parallel pin
Bearing
Shift bar
Dipstick
Packing
Clutch housing
Packing
Drain plug
O-ring
Oil seal
Output shaft coupling
Lock nut

KBW10-A

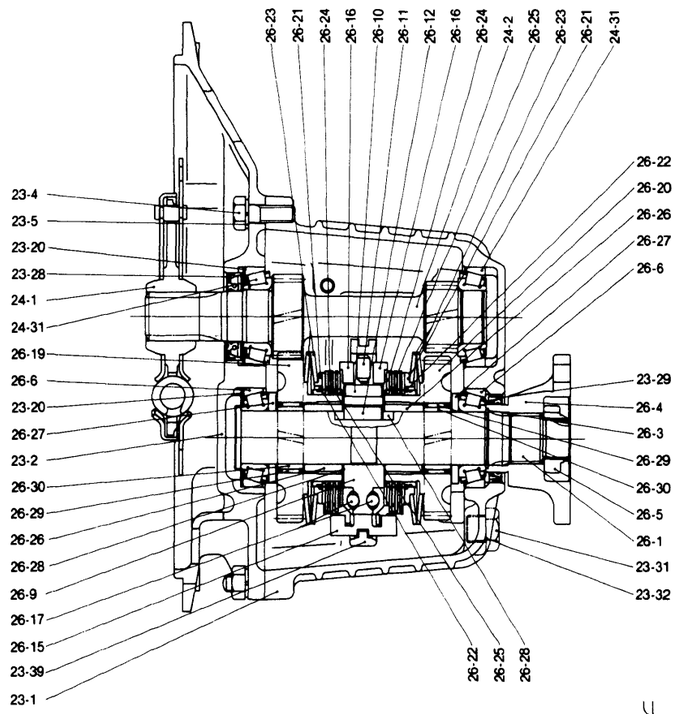

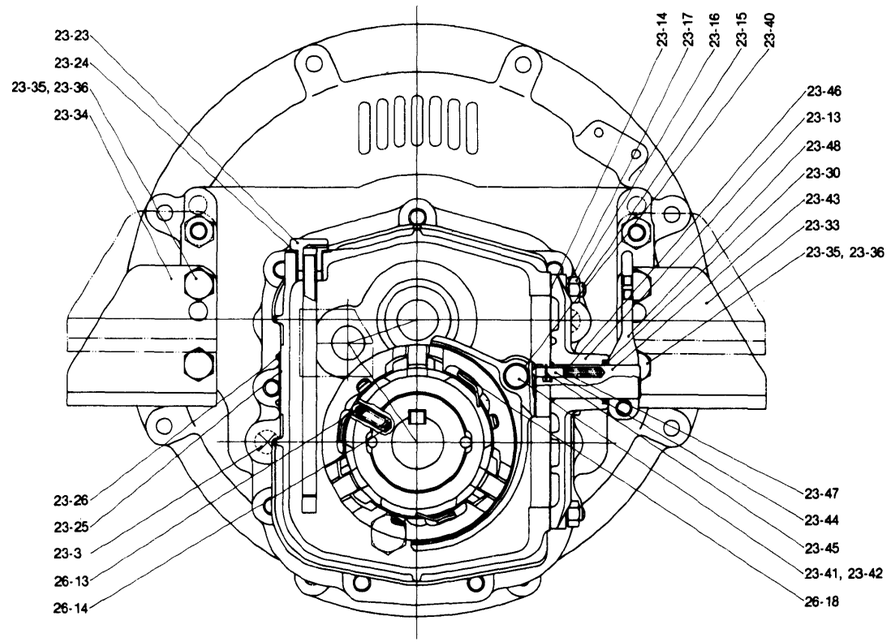

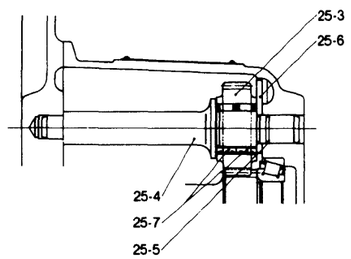

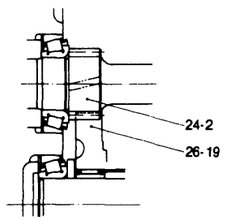

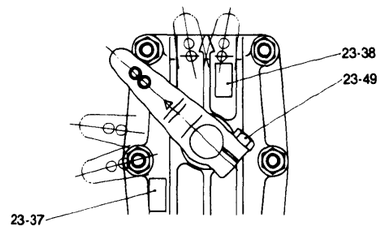

23-1	HOUSING, clutch
23-2	FLANGE, mounting
23-3	PARALLEL PIN
23-4	BOLT M10 × 30
23-5	LOCK WASHER 10
23-13	COVER (side)
23-14	PACKING, cover
23-15	STUD M8 × 22
23-16	NUT M8
23-17	LOCK WASHER 8
23-20	SHIM SET, output & input shaft
23-23	DIPSTICK w/BREATHER, lube oil
23-24	PACKING 16
23-25	LABEL
23-26	RIVET
23-28	OIL SEAL (TC30528), input shaft
23-29	OIL SEAL (TC40528), output shaft
23-30	OIL SEAL (SD 20264), cover
23-31	PLUG M16
23-32	PACKING 16
23-33	BRACKET (A)
23-34	BRACKET (B)
23-35	BOLT M10 × 30
23-36	LOCK WASHER 10
23-37	LABEL, FORWARD
23-38	LABEL, REVERSE
23-39	FORK Assembly, shift (inc. 23-40)
23-40	DRY BEARING
23-41	SHAFT, shift
23-42	PLUG
23-43	CAM, shift
23-44	PIN
23-45	CIRCLIP
23-46	SPRING (A)
23-47	SPRING (B)
23-48	LEVER, shift
23-49	BOLT M8 × 25

24-1	DISC, dumper
24-2	INPUT SHAFT, i = 2.14 INPUT SHAFT, i = 2.83
24-31	ROLLER BEARING LM67048/LM67010
25-3	IDLE GEAR Z = 25
25-4	SHAFT, idle gear
25-5	O-RING S—15
25-6	WASHER, thrust
25-7	NEEDLE BEARING
26-1	OUTPUT SHAFT
26-3	O-RING S—30
26-4	COUPLING, output
26-5	LOCK NUT
26-6	ROLLER BEARING LM67048/LM67010
26-8	PLATE, assembly driving (inc. 26-9 ∼ 11)
26-9	PLATE, driving
26-10	PARALLEL PIN
26-11	PARALLEL PIN
26-12	KEY
26-13	PIN
26-14	SPRING
26-15	RING, shifting
26-16	PLATE, pressure
26-17	STEEL BALL (8mm)
26-18	SPRING, return
26-19	GEAR Z = 47, forward i = 2.14 GEAR Z = 51, forward i = 2.83
26-20	GEAR Z = 45, reverse
26-21	RETAINER
26-22	CIRCLIP
26-23	SPRING
26-24	DISC, friction
26-25	PLATE, steel
26-26	SPACER
26-27	WASHER, thrust
26-28	SHIM SET, output, shaft
26-29	NEEDLE BEARING
26-30	RACE, inner

2. Installation

2-1 Installation angle

During operation the angular inclination of the gearbox in the longitudinal direction must be less than 20° relative to the water line.

2-2 Remote control unit

This marine gearbox is designed for single lever control to permit reversing at full engine speed (e.g. to avoid danger, etc.). Normally, Morse or Teleflex single lever control is employed. During installation, make sure that the remote control lever and shift lever on the marine gearbox are coordinated. Shifting the lever toward the propeller side produces forward movement, while moving the lever toward the engine side causes the vessel to move in the reverse direction.

To connect the linkage, the operating cable must be positioned at right angles to the shift lever when the shift lever is in the neutral position.

The shift play, measured at the pivot point of the shift lever, must be at least 35mm on each side (reverse and forward) of the neutral position. Greater shift play has no adverse effect on the marine gearbox. After connecting the linkage, confirm that the remote control and the shift lever on the marine gearbox work properly.

A typical linkage arrangement is illustrated in the figure below.

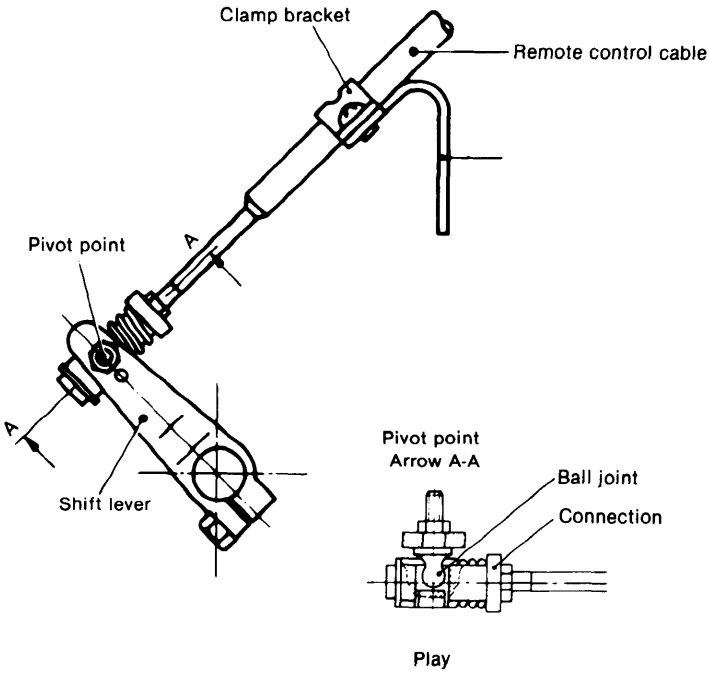

NOTE: Since the cable stroke may be insufficient, two holes are drilled in the shift lever.
When the cable is attached to the hole 60mm (2.3622in.) from the center of the rotation of the shift lever, the strokes from the center to the forward and reverse sides must both be 35mm (1.3780in.).

When the cable is attached to the hole 52mm (2.0472in.) from the center of the rotation of the shift lever, these strokes must be 30mm (1.1811in.).

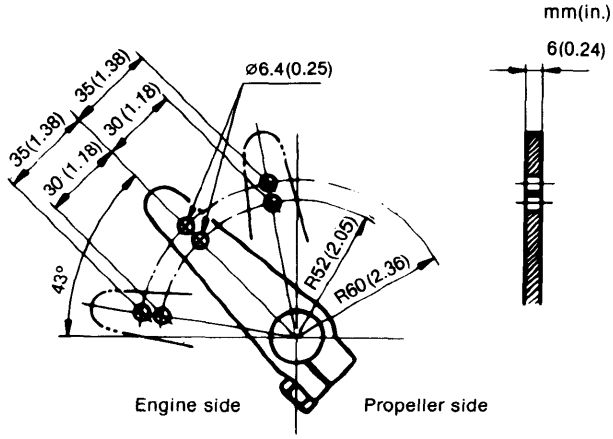

Side view of clutch

3. Operation and Maintenance

3-1 Lube oil

(1) Oil level

The oil level should be checked each month and must be maintained between the groove and the end of the dipstick. The groove indicates the maximum oil level and the end of the dipstick is the minimum oil level. When checking the oil level with the dipstick, do not screw in the oil filler screw; it should rest on top of the oil filler hole.

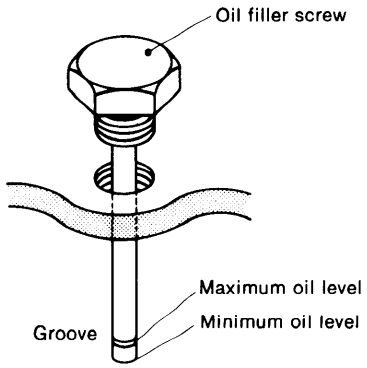

(2) Oil change

Change the oil after the first 100 hours of operation, and every 300 hours of operation thereafter. When adding oil between oil changes, always use the same type of oil that is in the marine gearbox.

(3) Recommended brands of lube oil

Supplier	Brand name
SHELL	SHELL DEXRON
CALTEX	TEXAMATIC FLUID (DEXRON)
ESSO	ESSO ATF
MOBIL	MOBIL ATF220
B.P. (British Petroleum)	B.P. AUTRAN DX

3-2 Precautions

Do not stop the shift lever halfway between the neutral and forward or reverse positions. The lever must be set to the neutral position or shifted into forward or reverse in a single motion.

3-3 Side cover

The internal shifting mechanism has been carefully aligned at the factory. Improper removal of the side cover can cause misalignment. If the side cover must be removed, proceed as follows:

—Before removing the cover, put alignment marks on the side cover and the case to facilitate accurate installation.

—When installing the side cover, put the shift lever in neutral so that the cam lobe on the shift lever engages the groove on the internal shift mechanism. When the cam lobe and groove are engaged properly there will be no clearance between the body and the side cover. Do not use packing or gaskets when installing the side cover.

—After making sure that the cam lobe and notches are aligned properly, securely tighten all the bolts. After tightening the bolts, move the lever back and forth. Positive contact should be felt and a click should be clearly audible as the gears shift; otherwise, the cam and notch are not properly engaged, and the cover must be loosened and readjusted until proper engagement is achieved.

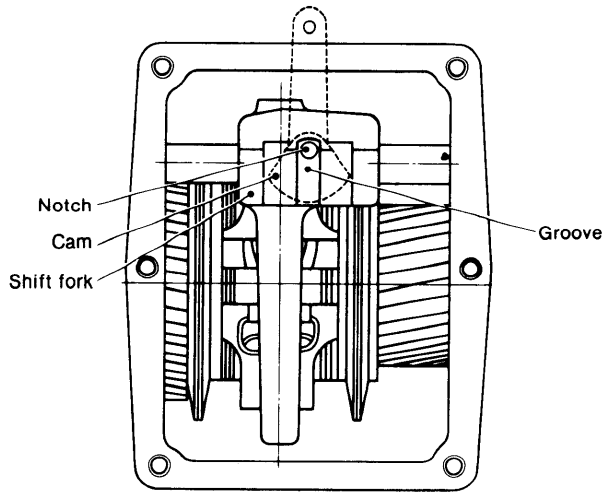

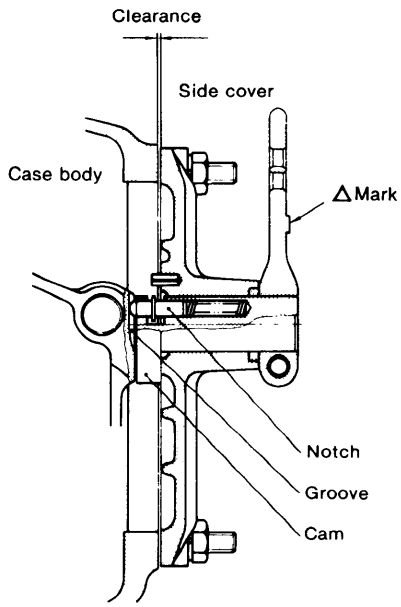

4. Inspection and Servicing

4-1 Clutch case

(1) Check the clutch case with a test hammer for cracking. Perform a color check when required.
If the case is cracked, replace it.

(2) Check for staining on the inside surface of the bearing section.
Also, measure the inside diameter of the case.
Replace the case if it is worn beyond the wear limit.

4-2 Bearing

(1) Rusting and damage
If the bearing is rusted or the taper roller retainer is damaged, replace the bearing.

(2) Make sure that the bearings rotate smoothly.
If rotation is not smooth, if there is any binding, or if an abnormal sound is heard, replace the bearing.

4-3 Gear

(1) Tooth surface wear
Check the tooth surface for pitching, abnormal wear, dents, and cracks. Repair lightly damaged gears and replace heavily damaged gears.

(2) Tooth surface contact
Check the tooth surface contact. The amount of tooth surface contact between the tooth crest and tooth flank must be at least 70% of the tooth width.

(3) Backlash
Measure the backlash of each gear, and replace the gear when it is worn beyond the wear limit.

mm (in.)

	Maintenance standard	Wear limit
Input shaft forward gear and output shaft forward gear	0.1 ~ 0.2 (0.0040 ~ 0.0079)	0.3 (0.0118)
Input shaft reverse gear and intermediate gear	0.1 ~ 0.2 (0.0040 ~ 0.0079)	0.3 (0.0118)
Intermediate gear and output shaft reverse gear	0.1 ~ 0.2 (0.0040 ~ 0.0079)	0.3 (0.0118)

(4) Forward/reverse gear spline
1) Check the spline for damage and cracking.
2) Step wear of spline
Step wear depth limit: 0.1mm (0.0040in.)

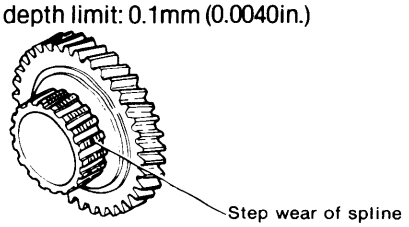

(5) Forward/reverse gear needle bearing
When an abnormal sound is produced at the needle bearing, visually inspect the rollers; replace the bearing if the rollers are faulty.

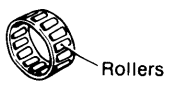

4-4 Steel plate

(1) Burning, scratching, cracking
Replace any steel plates that are discolored or cracked.

(2) Warping measurement

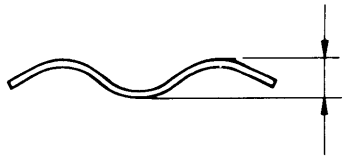

mm (in.)

	Maintenance standard	Wear limit
Warping	$1.6^{+0.10}_{-0.11}$ (0.05870 ~ 0.067)	1.4 (0.0551)

(3) Steel plate pawl width measurement

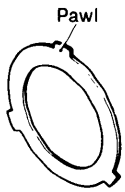

Measure the width of the steel plate pawl and the width of the pressure plate; replace the plate when the clearance exceeds the wear limit.

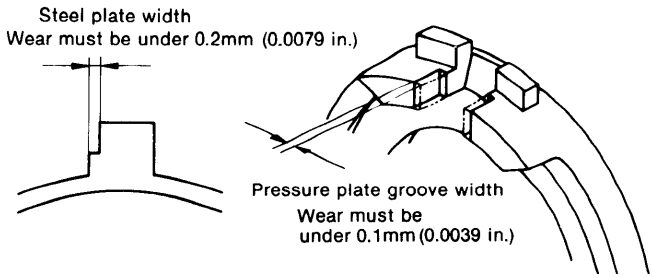

mm (in.)

	Maintenance standard	Wear limit
Steel plate width	$12^{0}_{-0.2}$ (0.4646 ~ 0.4724)	Worn 0.2 (0.0079)
Pressure plate groove	$12^{+0.1}_{0}$ (0.4724 ~ 0.4764)	Worn 0.1 (0.0039)
Clearance	0 ~ 0.3 (0 ~ 0.0118)	0.3 ~ 0.6 (0.0118 ~ 0.0236)

4-5 Friction plate

(1) Check the friction plate for burning, scoring, or cracking.
Repair the plate when the damage is light and replace the plate if the damage is heavy.

(2) Friction surface wear
Measure the thickness of the friction plate, and replace the plate when it is worn beyond the wear limit.

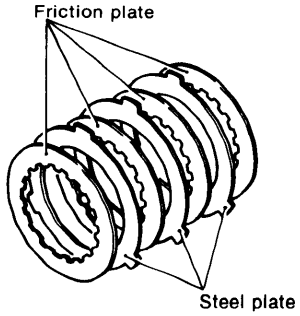

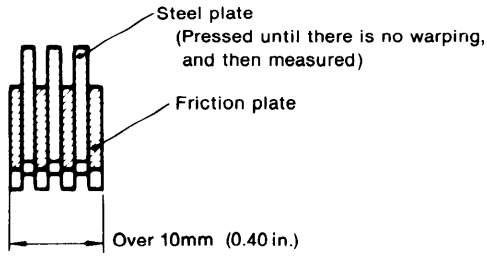

mm (in.)

	Maintenance standard	Wear limit
Friction plate thickness	$1.7\ ^{0}_{-0.05}$ (0.0650 ~ 0.0670)	1.5 (0.0591)

The assembled friction plate and steel plate dimensions must be over 10mm (0.0040in.).

Both sides of the friction plate have a 0.35mm copper sintered layer. Replace the friction plate when this layer is worn more than 0.2mm on one side (standard thickness $1.7\ ^{0}_{-0.05}$ mm). However, the sum of the wear of the four friction plates must not exceed 0.8mm. When this value is exceeded, replace all friction plates. In unavoidable circumstances, it is permissible to replace only the friction plate with the greatest amount of wear.

(3) Friction plate and gear spline back clearance
Measure the clearance between the friction plate spline collar and the output shaft gear spline, and replace the plate or spline when they are worn beyond the wear limit.

mm (in.)

	Maintenance standard	Wear limit
Standard backlash	0.20 ~ 0.61 (0.0079 ~ 0.0240)	0.9 (0.0354)

4-6 Pressure plate

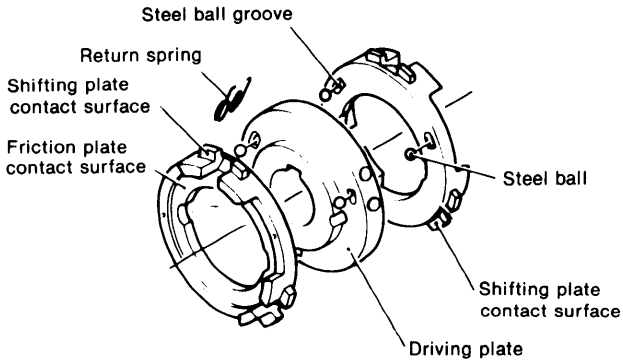

(1) Steel ball groove
Check the steel ball groove for stains and wear.
Replace the pressure plate if the groove is noticeably worn.

(2) Friction plate contact surface
Check the contact face for stains and damage.

(3) Shifting plate contact surface

(4) Worn parts measurement

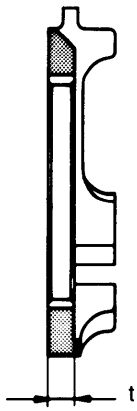

mm (in.)

	Maintenance standard	Wear limit
Thickness: t	$6.6\ ^{0}_{-0.2}$ (0.2520 ~ 0.2598)	6.3 (0.2480)

(5) Return spring permanent strain.
Make sure the length (free length) is within the values specified in the figure.

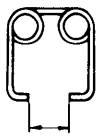

17 ±0.5mm (0.6496~0.6890 in.)

4-7 Driving plate

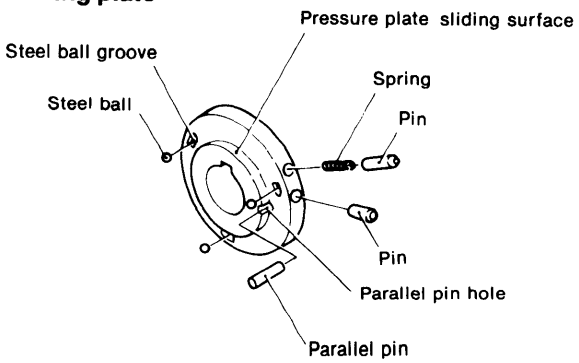

(1) Check the key groove for scoring and cracking, and the output shaft fitting section for burning. Repair if the damage is light and replace the driving plate if the damage is heavy.

(2) Outside diameter of pressure plate sliding part; others

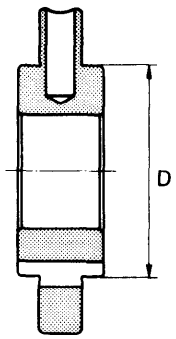

mm (in.)

	Maintenance standard	Wear limit
Outside diameter: D	$\varnothing 59\ ^{-0.060}_{-0.134}$ (2.3176 ~ 2.3205)	ø58.8 (2.3150)

(3) Steel ball groove wear and stains.

(4) Determine the amount of wear and play of both the axial and circumferential direction pins.

(5) Permanent spring strain.

mm (in.)

	Maintenance standard	Wear limit
Spring free length	32.85 (1.2933)	32 (1.2598)

(6) Pin end wear.

4-8 Retainer

(1) Check for stains and damage on the friction plate contact surface.

(2) Check for wear and cracking on the plate spring contact surface.

(3) Measurement of dimensions

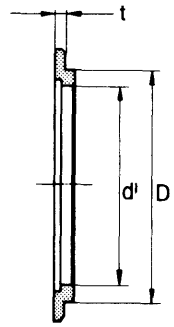

mm (in.)

	Maintenance standard	Wear limit
d	$\varnothing 57.5\ ^{+0.106}_{+0.060}$ (2.2661 ~ 2.2680)	ø57.8 (2.2756)
D	$\varnothing 66\ ^{0}_{-0.1}$ (2.5945 ~ 2.5984)	ø65.7 (2.5866)
t	$2.8\ ^{0}_{-0.08}$ (0.1071 ~ 0.1102)	2.6 (0.1024)

4-9 Plate spring

(1) Permanent strain

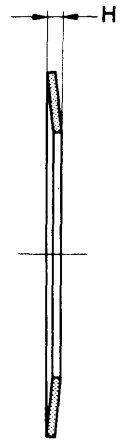

mm (in.)

	Maintenance standard	Wear limit
H: when plate spring is free	$6.25\ ^{\pm 0.1}$ (0.2421 ~ 0.2500)	6.0 (0.2362)

4-10 Thrust collar

The gear side of the thrust washer has a 0.3mm copper sintered layer. Replace the thrust collar when the thickness is less than 4.75mm (standard thickness: $5\ ^{0}_{-0.1}$ mm).

4-11 Shift ring

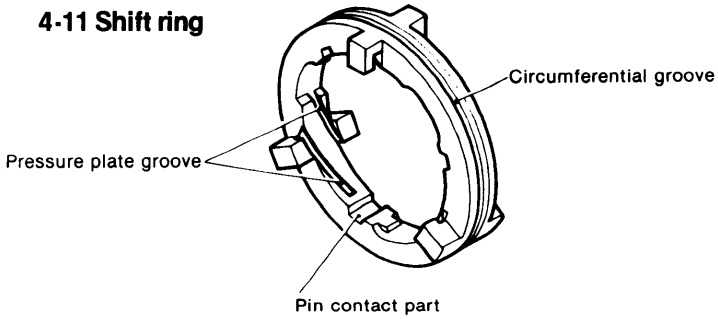

(1) Circumferential groove wear.

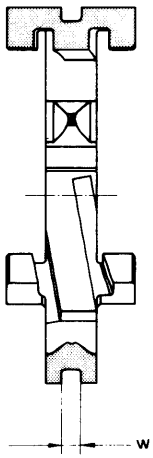

mm (in.)

	Maintenance standard	Wear limit
Shifting groove : w	$6^{+0.1}_{0}$ (0.2362 ~ 0.2402)	6.3 (0.2480)

(2) Pressure plate groove wear.
Whenever uneven wear and/or scratches are found, replace with a new part.
(3) Parallel pin contact part wear.
Whenever uneven wear and/or scratches are found, replace with a new part.

4-12 Shift fork and shift lever

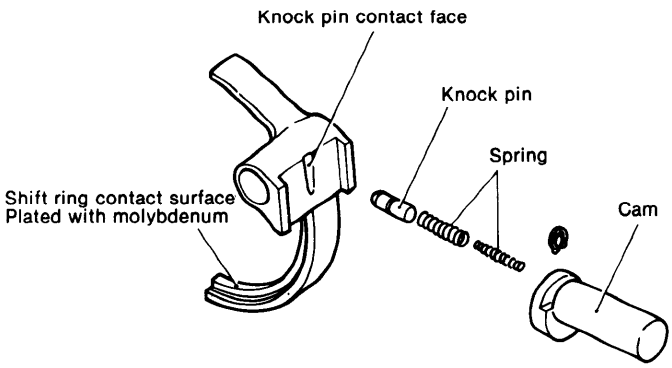

(1) End wear.
The shift ring contact surface of the shift fork is plated with molybdenum (thickness: 0.04—0.05mm). If this plating is peeled or worn to such an extent that the base metal of the shift fork is exposed, replace the shift fork.
(2) Cam surface wear and stains.
Whenever uneven wear and/or scratches are found, replace with a new part.
(3) Pin part play.
Whenever uneven wear and/or scratches are found, replace with a new part.
(4) Notch end wear.
Whenever uneven wear and/or scratches are found, replace with a new part.

4-13 Output shaft

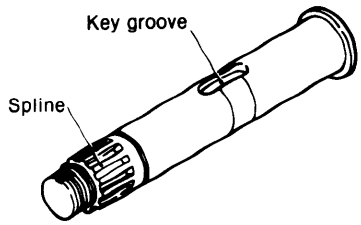

(1) Key groove.
Whenever uneven cracks and/or stains are found, replace with a new part.

4-14 Damper disc

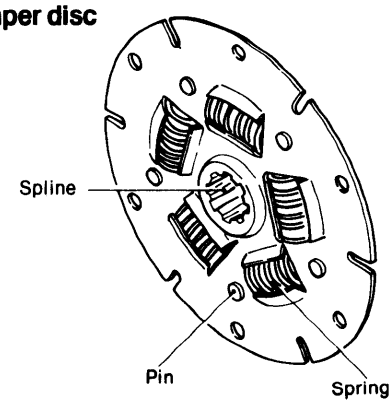

(1) Spline part
Whenever uneven wear and/or scratches are found, replace with a new part.
(2) Spring.
Whenever uneven wear and/or scratches are found, replace with a new part.
(3) Pin wear.
Whenever uneven wear and/or scratches are found, replace with a new part.

4-15 Input shaft

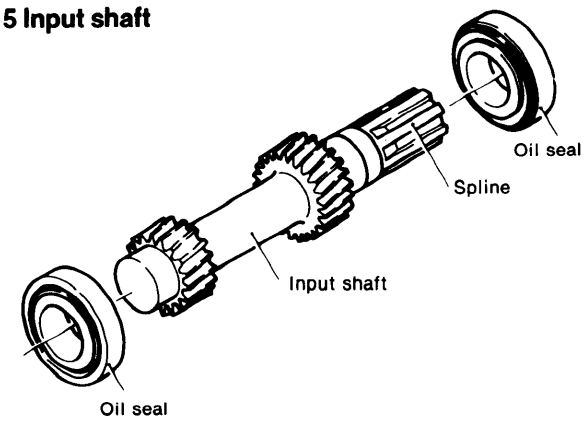

(1) Spline part
Whenever uneven wear and/or scratches are found, replace with a new part.

(2) Surface of oil seal.
If the sealing surface of the oil seal is worn or scratched, replace.

4-16 Intermediate shaft

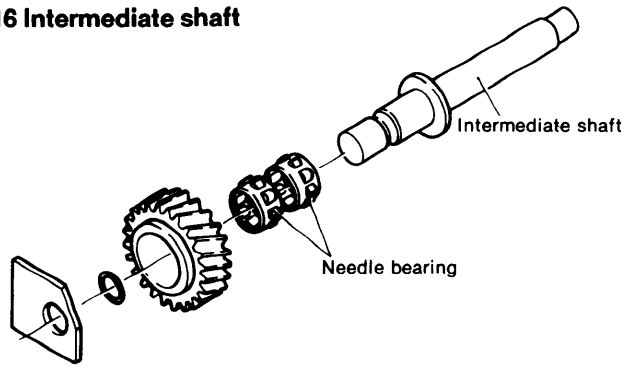

(1) Needle bearing dimensions, staining.
Check the surface of the roller to see whether the needle bearing sticks or is damaged. Replace if necessary.

5. Disassembly

5-1 Disassembling the clutch and accessories

(1) Remove the drain plug and packing, and drain the oil from the clutch.
(2) Uncaulk the output shaft lock nut, and remove the nut using a disassembly tool.

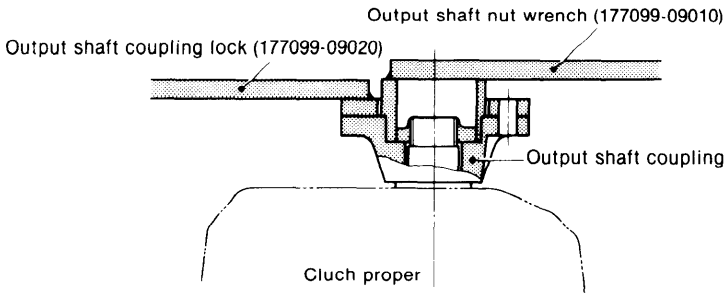

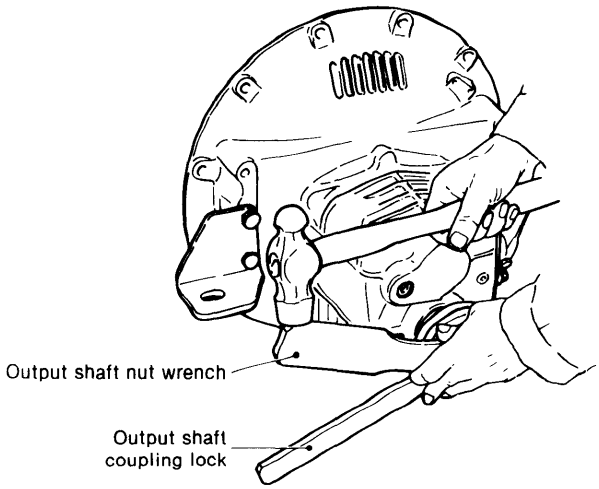

(3) Remove the output coupling.
(4) Remove the dipstick and packing.
(5) Remove the case cover M8 nut super lock washer; remove the case cover, with the operating lever, shift cam, etc. in position.
(6) Remove the shift bar plug with a hexagonal bar spanner (width across flats: 8mm (0.0394in.), and pull the shift bar from the case, using the M10 pulling bolt at the end of the shift bar.

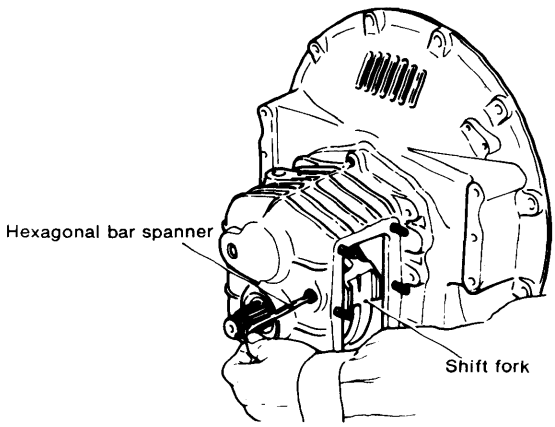

(7) Remove the shift fork.

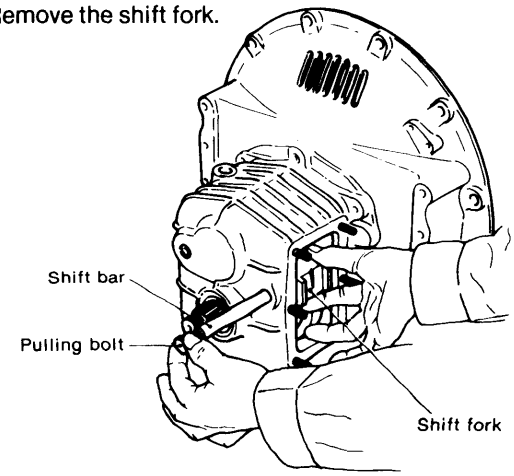

(8) Remove the M10 bolt and super lock washer on the mounting flange.

(9) Screw the M10 bolt into the M10 pulling bolt hole of the mounting flange, and remove the mounting flange. Do not remove the parallel pin.

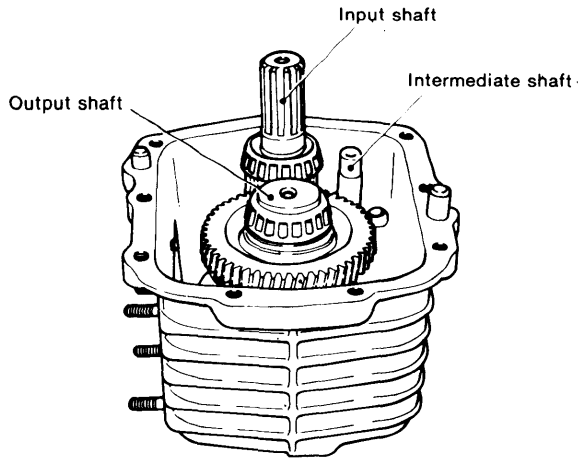

(10) Remove the output shaft, intermediate shaft, and input shaft from the case, in that order.

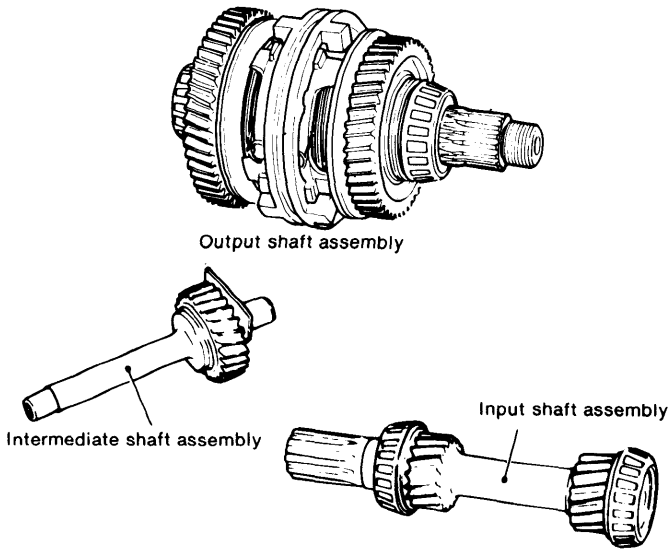

(11) Heat the case body to about 100°C and remove the outer race of the input shaft and output shaft bearings. If the outer races are difficult to remove, tap them out with a plastic hammer from the rear of the case, or pull them by using the pulling groove in the case at the rear of the races.
(12) Remove the outer race of the bearing from the mounting flange as described in step (11) above.
(13) Remove the input shaft and output shaft adjusting plates.

NOTE: If the following parts are not replaced, the adjusting plates may be reused without readjustment. However, if even one part is replaced, readjustment is necessary.
Input shaft part: 24-2, 24-31
Output shaft part: 26-6, 26-9, 26-26, 26-27, 26-28, 26-30

(14) Pull the oil seal from the case.
(15) Pull the oil seal from the mounting flange.

5-2 Disassembling the input shaft

Pull the bearing from the input shaft.

NOTE: Do not disassemble unless the input shaft parts are damaged.

5-3 Disassembling the output shaft

(1) Remove the O-ring.

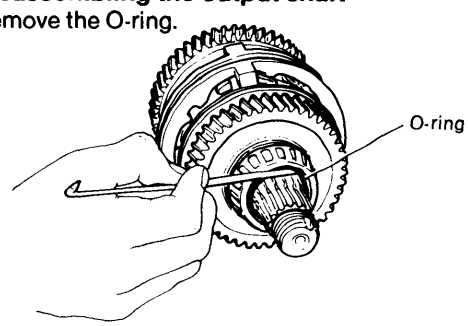

(2) Remove the output shaft by pressing the threaded end of the output shaft with a press, or tapping it with a hammer.

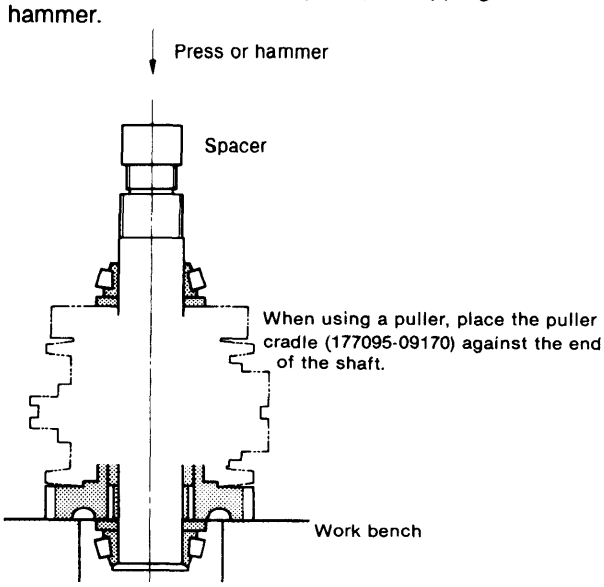

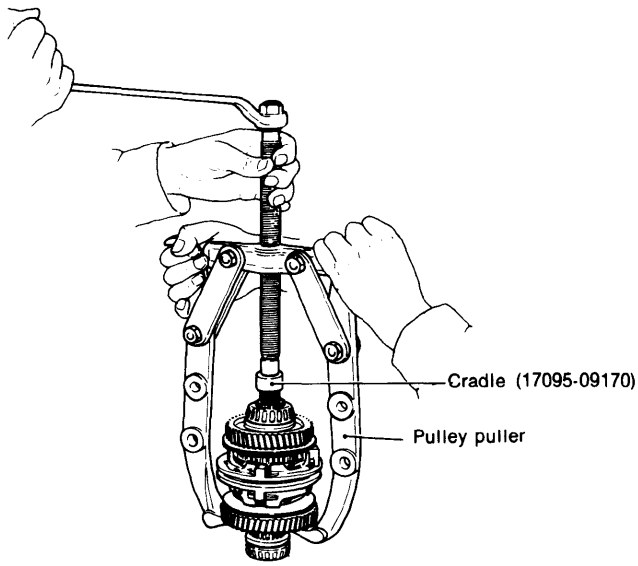

NOTE 1: When removing the shaft, place spacers between the shaft and the press to prevent damage.

NOTE 2: Make sure that the forward large gear parts and reverse large gear parts are not mixed together once they are removed.

(3) Remove the adjusting plate.

NOTE: Record the thickness of the adjusting plate to facilitate reassembly.
If the parts are not replaced, the adjusting plate may be reused without readjustment. However, if even one part is replaced, readjustment is required.

(4) Remove the key.
To facilitate removal, clamp the key with a vice.
(5) Remove the adjusting plate.

NOTE: Record the thickness of the adjusting plate to facilitate reassembly.
If the parts are not replaced, the adjusting plate may be reused without adjustment. However, if even one part is replaced, readjustment is required.

(6) Remove the spacer and needle bearing.
(7) Cover the outer race of the forward bearing, and pull out the output shaft about 10mm (0.3937in.) by pressing the threaded end of the output shaft with a press, or tapping it with a hammer.

NOTE: Do not pull it out more than 10mm (0.3937in.); otherwise damage may result.

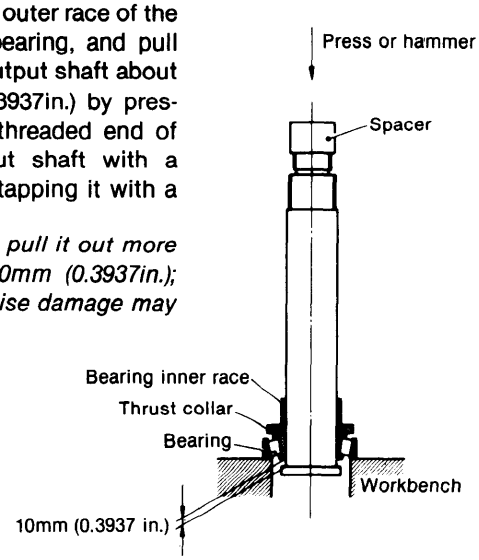

(8) Insert the disassembly tool between the collar of the output shaft and the bearing; next remove the bearing inner race, thrust collar, and bearing from the output shaft with a press or hammer.

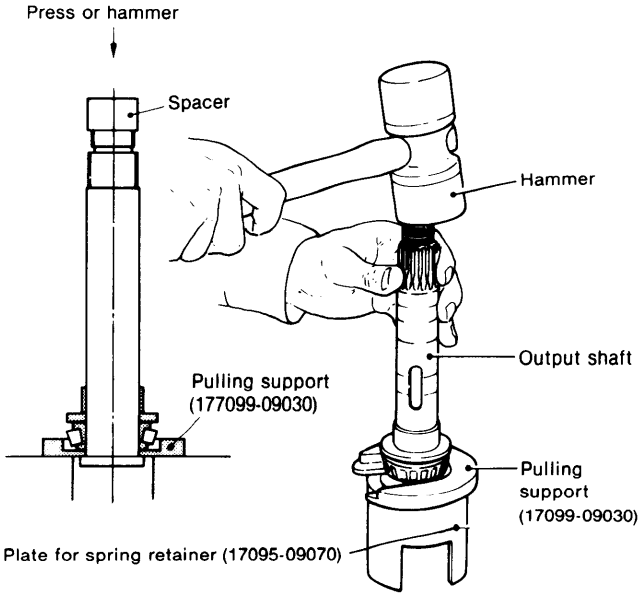

(9) Remove the friction plates and steel plates from the forward large gear.

(10) Using a disassembly tool, compress the plate spring and remove the circlip from the forward large gear.

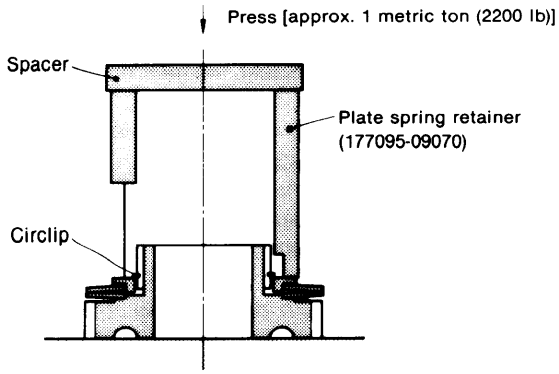

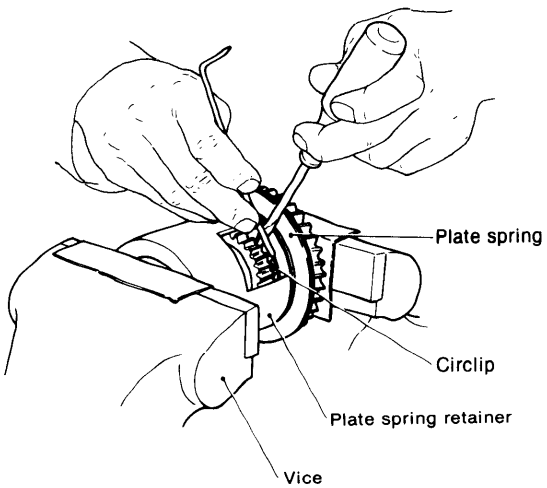

(11) Remove the retainer and plate spring.

(12) Remove the parts from the reverse large gear as described in steps (9)—(11) above.

(13) Remove the pressure plate return spring; remove the pressure plate and steel ball.

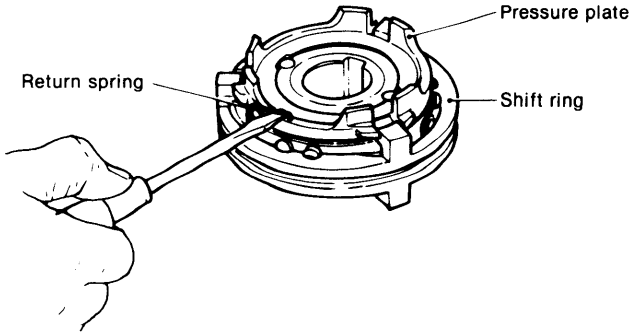

(14) Remove the shift ring.
To disassemble, remove the three knock pins. When disassembling the shift ring, cover it with a cloth to prevent it being lost.

(15) Remove the knock pin and spring from the driving plate.

5-4 Disassembling the intermediate shaft

(1) Place a spacer against the case side end of the intermediate shaft and remove the shaft from the case by tapping the spacer with a hammer.

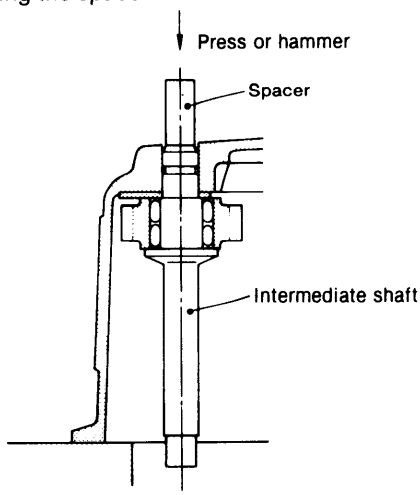

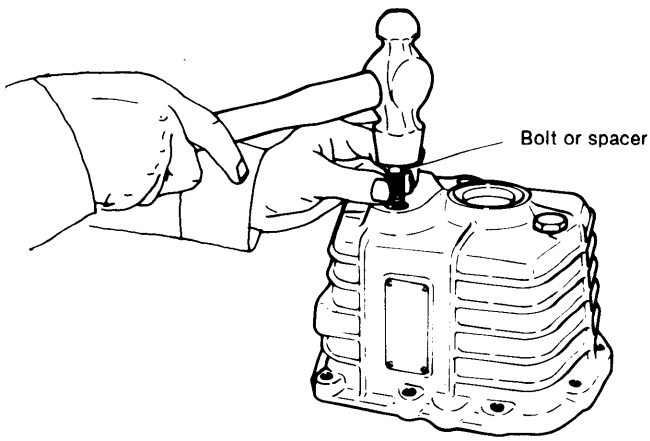

(2) Remove the O-ring.
(3) Remove the idle gear, needle bearing, and thrust washer.

5-5 Disassembling the operating system

(1) Loosen the M8 bolt of the shift lever; remove the shift lever.
(2) Pull the shift cam.
(3) Push in the knock pin and remove the circlip.
(4) Remove the knock pin and spring.
(5) Pull the oil seal from the case side cover.

6. Reassembly

6-1 Reassembly precautions

(1) Before reassembling, clean all parts in washing oil, and replace any damaged or worn parts.
Remove non-dry packing agent from the mating surface with a blunt knife.
(2) Pack the oil seal and O-ring parts with grease.
(3) Coat the mating surfaces of the case with wet packing.

6-2 Reassembling the output shaft

(1) Reassembling forward large gear and plate spring
1) Insert the two plate springs of the forward large gear so that their large diameter sides are opposite each other.
2) Insert the retainer and install the circlip.
3) Compress the plate spring, using the disassembly tool, and snap the circlip into the groove on the outside of the spline of the forward large gear.

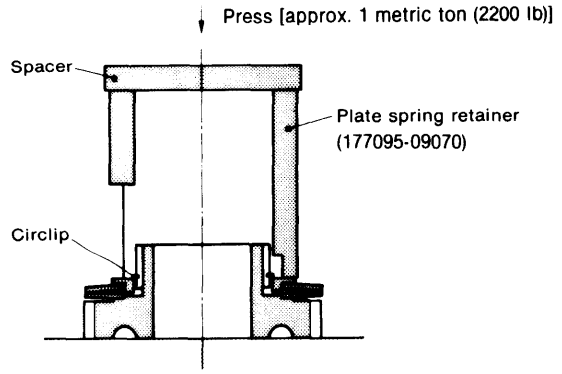

(2) Reassemble the reverse large gear and plate spring, retainer, and circlip as described in step (1) above.
(3) Determining the forward adjusting plate thickness

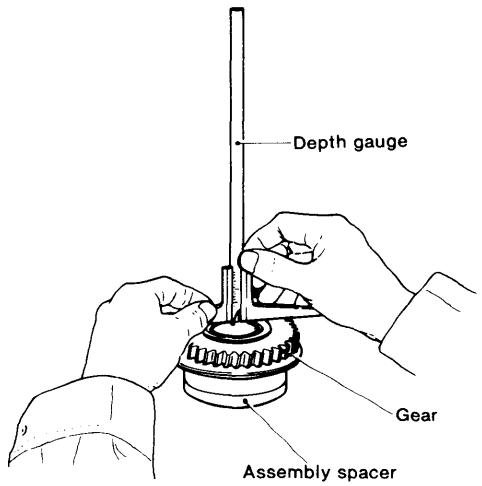

NOTE: As mentioned in section 5-3. (5), if no parts need to be replaced, the adjusting plate can be reused without adjustment.

1) Position the assembled large gear on the assembly tool so that the spline part is on the bottom; insert the spacer and bearing inner race into the gear.

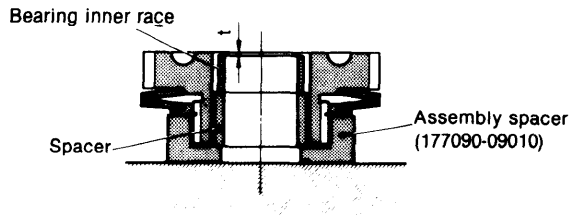

2) Adjust the thickness of the adjusting plate until it conforms to the dimension shown in the figure.
3) Two adjustment plates of 0.5mm (0.0197in.) and 0.3mm (0.0118in.) are available.
Combine these plates to obtain the "t" dimension.
(4) Determine the thickness of the reverse adjusting plate by following the procedure described in step(3)above.
(5) First, insert a friction plate into the spline part of the forward large gear; next insert steel plates and friction plates alternately. Finally, insert a friction plate (four friction plates and three steel plates).
(6) Insert the friction plates and steel plates into the spline part of the reverse large gear in the same manner as described in step (5) above (four friction plates and three steel plates).
(7) Press the inner race of the bearing onto the output shaft up to the collar, using an assembly tool.

NOTE: The inner race can be installed easily by preheating it to approximately 100°C.

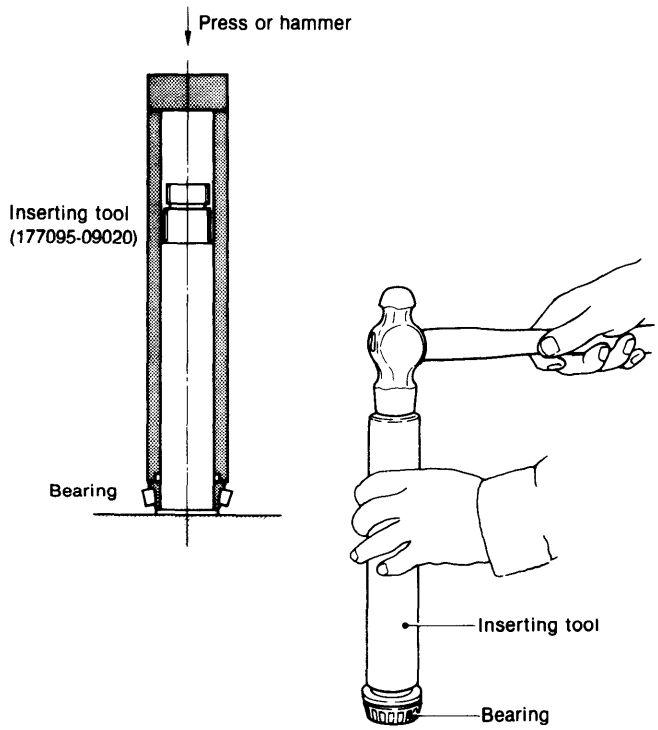

(8) Insert the thrust collar, with the sintered surface (brown surface) facing the gear side.
(9) Press the bearing inner race onto the output shaft, using an assembly tool.

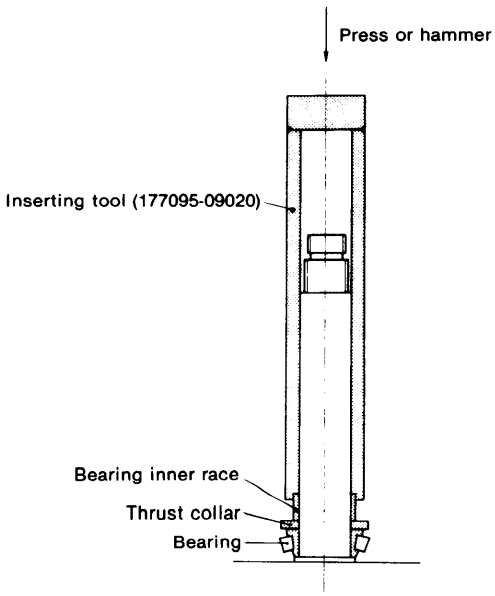

(10) Insert the needle bearing.
(11) Insert the spacer and adjusting plate.
(12) Fit the key so that the fillet side is facing the threaded part of the output shaft.

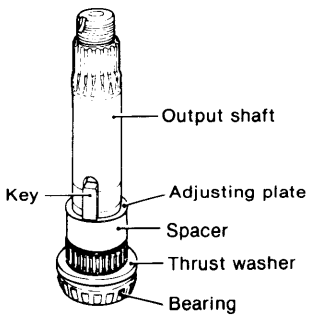

(13) Insert the forward large gear, together with the friction plates and steel plates. At this time, align the three pawls on the outside of the steel plates.

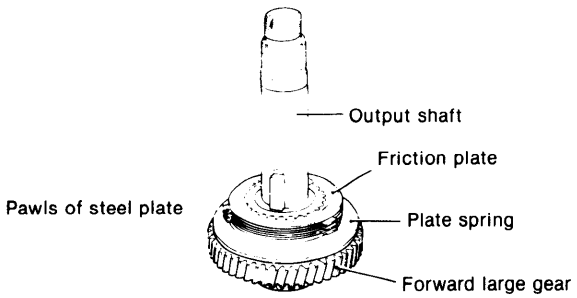

(14) Cover the friction plates and steel plates with the pressure plate so that the pawls of the steel plate fit into the three notches on the pressure plate.
(15) Insert the three steel balls into the three grooves in the pressure plate.
(16) Insert the drive plate into the output shaft so that the side with the identification groove faces the forward large gear side.

NOTE: Make sure that the three steel balls are in the three grooves of the driving plate.
At the same time, make sure that the pin for the driving plate fits into the groove of the torque limitter for the pressure plate.

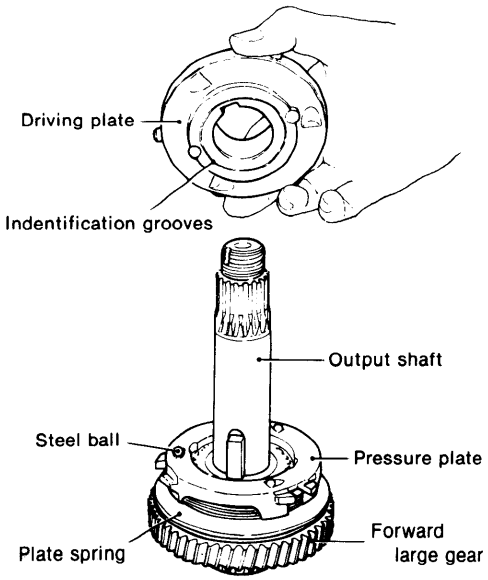

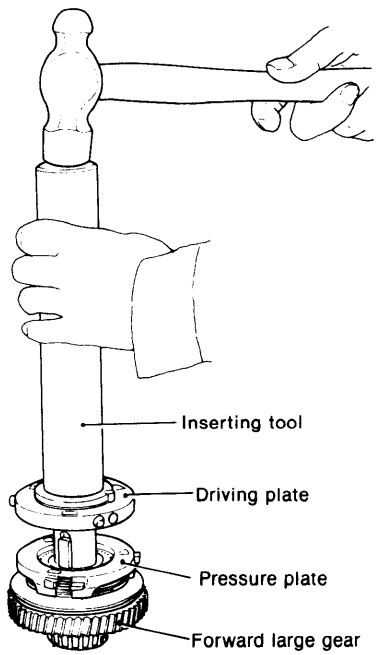

(17) Insert the adjusting plate and spacer.
(18) Press the bearing inner race, using an assembly tool.

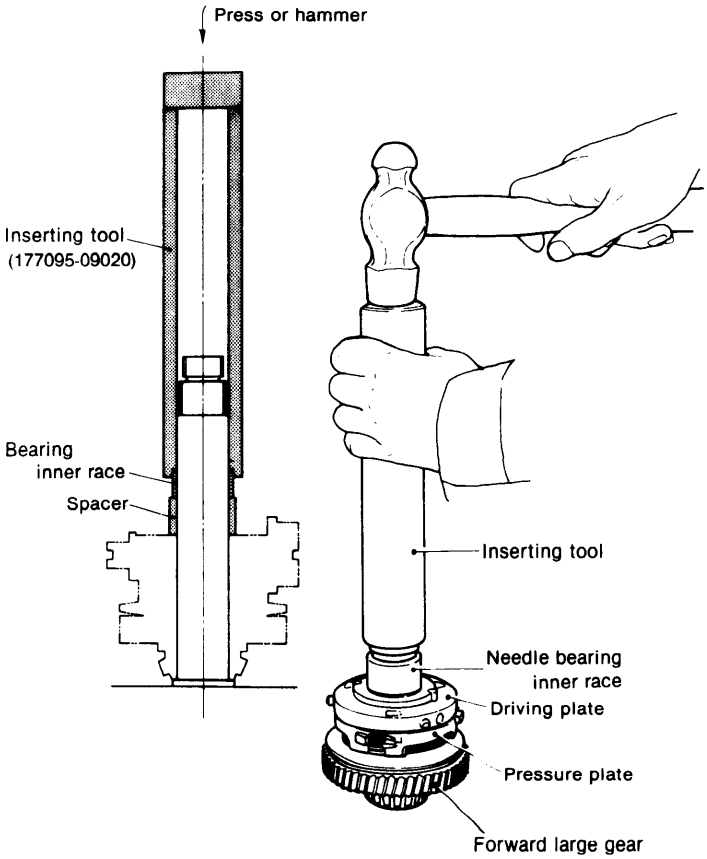

(19) Insert the knock pins and springs into the three holes around the circumference of the driving plate.
(20) Cover the driving plate with the shift ring so that the side with the identification groove faces the forward large gear side; install the ring so that the knock pins are pushed in.

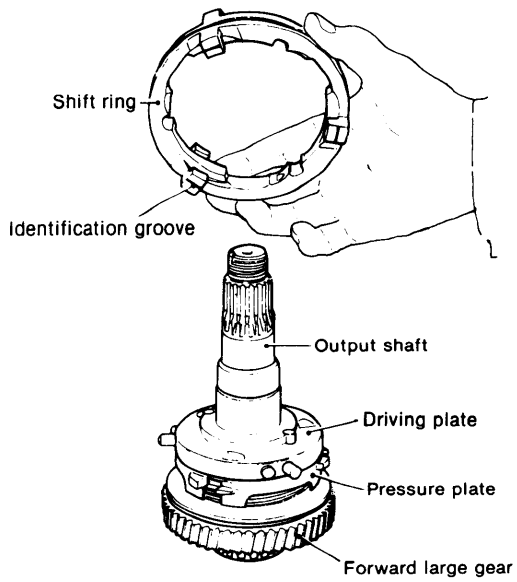

(21) Insert the three steel balls into the three grooves in the driving plate.
(22) Place the pressure plate onto the driving plate so that the steel balls enter the three grooves of the pressure plate.
(23) Insert the three pressure plate return springs between the shift ring and the driving plate, and attach them to the small holes in the side of the pressure plate.
(24) Insert the reverse large gear [see step (6)] so that the three pawls of the steel plates enter the notches around the circumference of the pressure plate.
(25) Insert the needle bearing.
(26) Insert the thrust washer so that the sintered side (brown side) faces the gear side.
(27) Press the inner race of the bearing, using an assembly tool. At this time, make sure that the direction of the bearing is correct.

NOTE: The bearing inner race can be installed easily by preheating it to approximately 100°C.

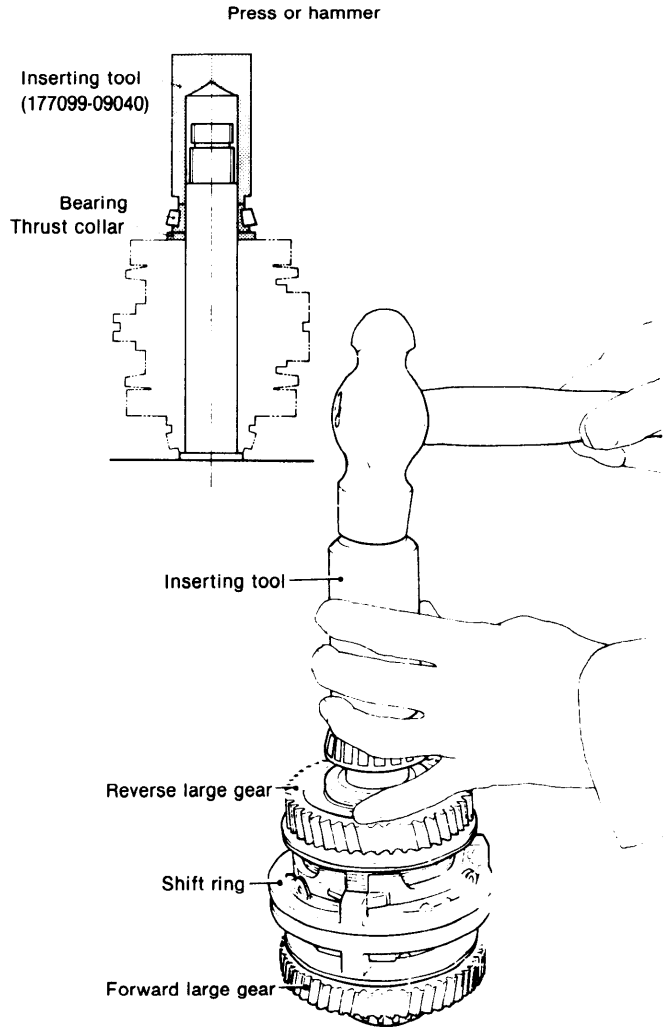

(28) Insert the O-ring.
(29) With the shift ring in the reverse position, check the forward large gear to make sure it rotates smoothly. Next, with the shift ring in the forward position, check the reverse large gear to make sure it rotates smoothly.

6-3 Reassembling the input shaft

Press the inner race of the bearing onto the input shaft. At this time, make sure that the direction of the bearing is correct.

NOTE: The bearing inner race can be easily installed by preheating it to approximately 100°C.

6-4 Reassembling the intermediate shaft

NOTE: Assemble the intermediate shaft as described in section 6-5. (5).

(1) Insert the needle bearing and idle gear on the intermediate shaft. Then insert the thrust washer.

NOTE: Pay careful attention to the assembling direction of the thrust washer.

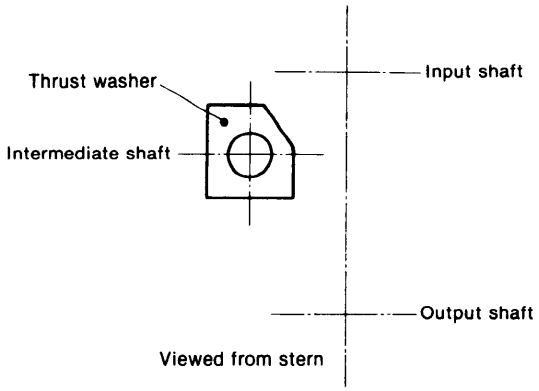

(2) Insert the O-ring.

(3) Press the assembled intermediate shaft into the case with a press or hammer.

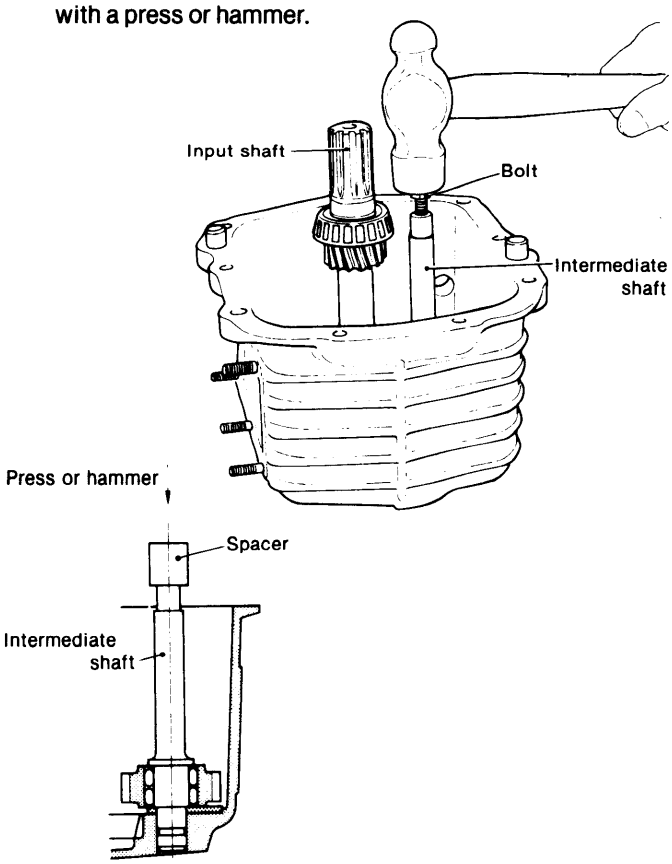

(4) Make sure that the idle gear rotates smoothly.

6-5 Installing the input shaft and output shaft

(1) Determining the thickness of the input shaft adjusting plate and output shaft adjusting plate

NOTE: As mentioned in section 5-1. (13), when none of the parts are replaced, the adjusting plate can be reused without readjustment.

1) Measure length "A" "D" between the cases of each shaft of the case body and mounting flange.
2) Cover each bearing with the bearing outer race, and measure length "B" "C" between the bearings.

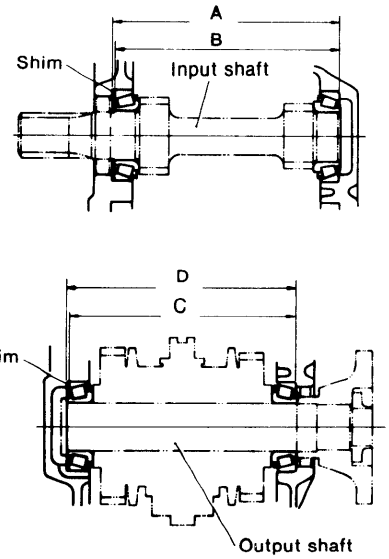

3) Adjust the input shaft adjusting plate thickness so that the clearance or tightening allowance is less than 0.05mm (0.0020in.).
4) Adjust the output shaft adjusting plate thickness so that the tightening allowance is within 0 ~ 0.1mm (0~0.0040in.).
5) Four adjusting plates of 1mm (0.0394in.), 0.5mm (0.0197in.), 0.3mm (0.0118in.) and 0.1mm (0.0040in.)are available.
   Combine these plates to obtain the desired adjusting plate measurement.

(2) Insert the adjusting plate into the mounting flange, and press the outer race of the bearing.
Also, press the outer race of the bearing into the case.

NOTE: The outer race can be installed easily by heating the mounting flange and case to approximately 100°C, or by cooling the bearing outer race with liquid nitrogen, etc.

(3) Coat the circumference of the oil seal with a non-dry packing agent, and press it onto the mounting flange and case so that the spring part of the oil seal is inside the case.

(4) Coat the mating surfaces of the mounting flange and case with a non-dry packing agent.
Wipe off oil and dirt on the mating surface of the case and coat with a thin film of non-dry packing agent.

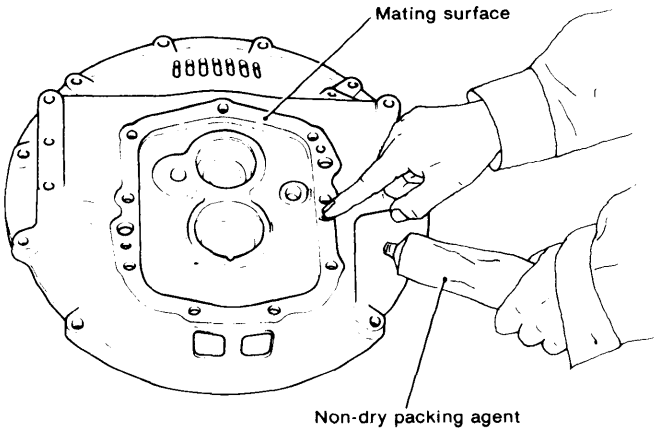

(5) Insert the input shaft into the case, assemble the intermediate shaft as described in section 6-4 and then insert the output shaft into the case.
(6) Align the mounting flange with the case, and insert the parallel pin by tapping the mounting flange with a plastic hammer.
(7) Insert the super lock washer and tighten the M10 bolt.
(8) Install the dipstick and packing.
(9) Install the drain plug and packing.

6-6 Reassembling and installing the operating system

(1) Insert the shift fork into the case from the side, insert the shift bar.

NOTE: Insert the shift bar with the threaded end towards the outside (output shaft coupling side).

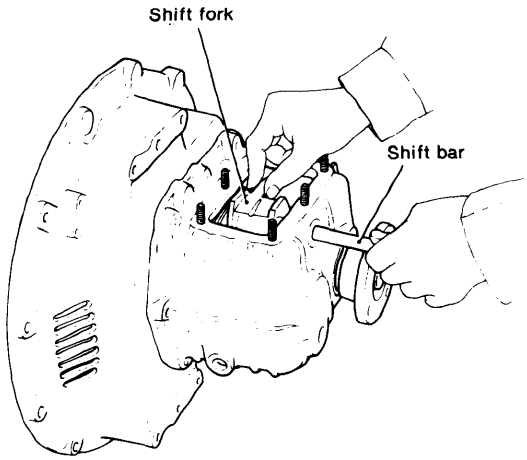

(2) Coat the threaded part of the shift bar plug with a non-dry packing agent and secure it to the case with a hexagonal bar spanner (width across flats: 8mm (0.3150in.).

NOTE: Put the shift fork into neutral before installing.

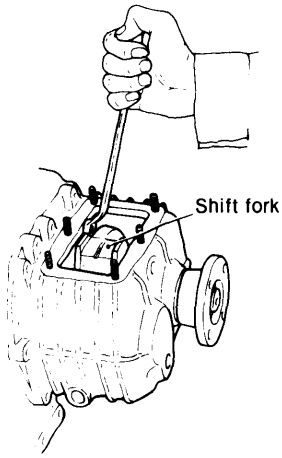

(3) Coat the circumference of the oil seal with a non-dry packing agent and press the seal to the case cover.
(4) Insert the spring into the shift cam.
(5) Insert the knock pin into the shift cam from the front end, and lock with the circlip.
(6) Insert the assembled shift cam into the case cover.
(7) Fit the shift lever to the shift cam, and tighten the M8 bolt.

NOTE: The shift cam must rotate smoothly.

(8) Replace the packing if it is damaged.
(9) Attach the case side cover together with the operating system to the case body.
At this time, make sure that the shift cam is fitted to the shift fork, and that the shift lever is in neutral.

NOTE: Put the shift fork into neutral before installing.

(10) Insert the super lock washer, and tighten the M8 nut.
(11) Shift the shift lever to forward and reverse to make sure that the lever operates normally.
If the lever does not operate normally, loosen the M8 nut, slide the case side cover forward, backward, and to the left and right, then re-tighten with the M8 nut in the position at which the lever operates normally.

NOTE: If the lever operates normally a click will be heard when it is put into forward and reverse.

6-7 Installing the output shaft coupling

(1) Install the output shaft coupling on the output shaft.
(2) Tighten and caulk the output shaft lock nut, using the assembly tool.
Tightening torque.....9.5kg-m (68.7ft-lb)

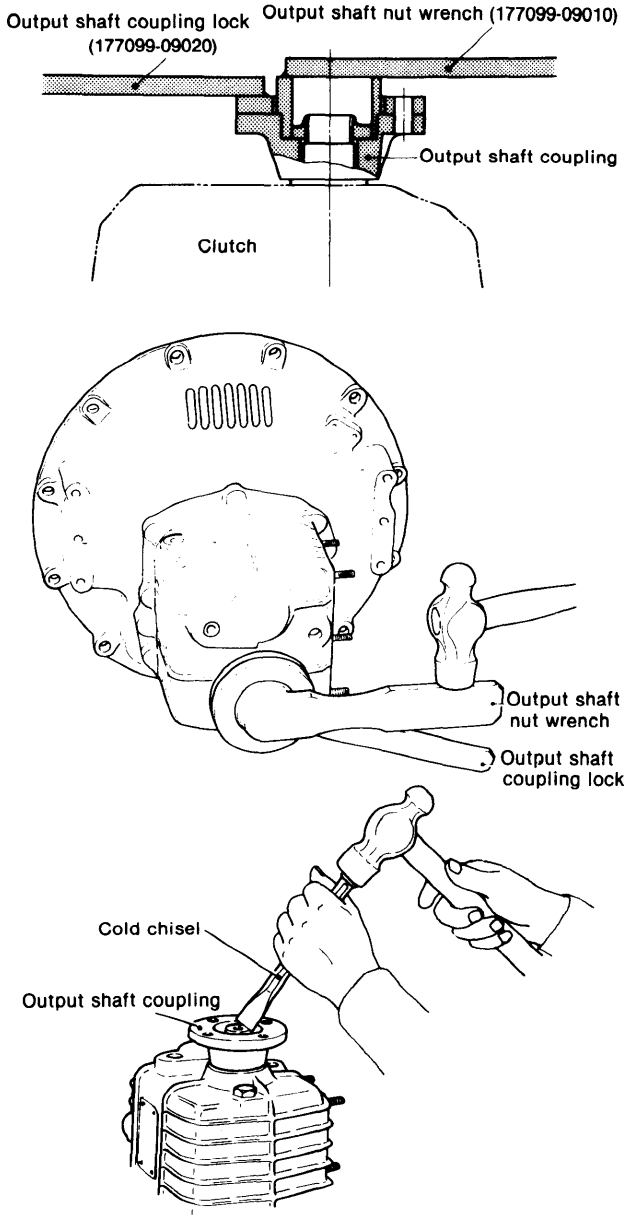

(3) Shift the shift lever to the neutral position and make sure the clutch engages when the shift lever is put into forward and reverse.
The input/output shafts will not rotate smoothly if the side gap of the bearing is too small in relation to the thickness of the adjusting plate.

[C] For model 3QM30H

1. Construction

1-1 Construction

The Kanzaki-Carl Hurth KH-18 reduction reversing gear was developed jointly by Kanzaki Precision Machine Co., Ltd., a subsidiary of Yanmar and one of Japan's leading gear manufacturers, and Carl Hurth Co.

The KH-18 consists of a multi-disc clutch and reduction gear housed in a single case. It is small, light, simply constructed and extremely reliable.

*The force required to shift between forward and reverse can be controlled by a cable type remote control system much smaller and simpler than other types of reduction reversing gears.

*The friction discs are durable sinter plates, and the surface of the steel plates are corrugated in a sine curve shape to insure positive engagement and disengagement and minimum loss of transmission force.

*Because of the special construction of this gear the optimum pressure is automatically applied to the clutch plate in direct proportion to the input shaft torque.

1-2 Specifications

Nomenclature			KH-18
Reduction system			One-stage reduction, helical gear
Reversing system			Constant mesh gear
Clutch			Wet type multi-disc mechanically operated
Reduction ratio	Forward		3.00, 2.03
	Reverse		3.06, 1.96
Direction of rotation	Input shaft		Counterclockwise as viewed from stern
	Output shaft	Forward	Clockwise as viewed from stern
		Reverse	Counterclockwise as viewed from stern
Lubricating oil			DEXRON • ATF
Lubricating oil capacity			1.7ℓ

1-3 Power transmission system

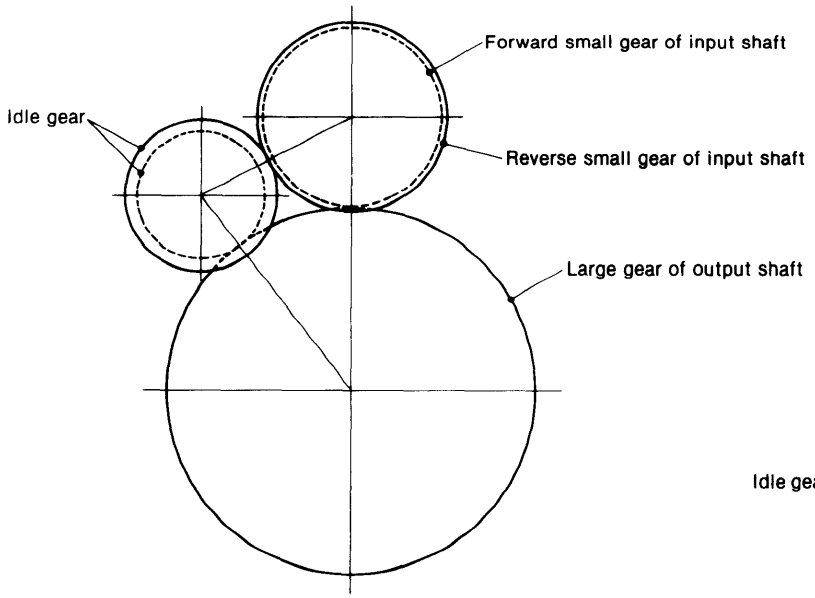

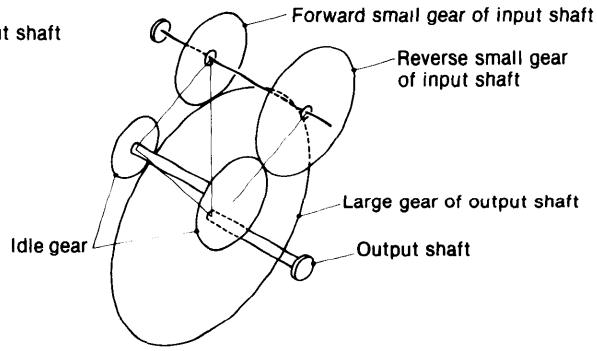

Forward			Reverse			
Number of teeth		Reduction ratio	Number of teeth			Reduction ratio
Forward small gear of input shaft	Large gear of output shaft		Reverse small gear of input shaft	Idle gear	Large gear of output shaft	
24	72	72/34 = 3.00	36	26,17	72	72/17 × 26/36 = 3.06
32	65	65/32 = 2.03	36	26,24	65	65/24 × 26/36 = 1.96

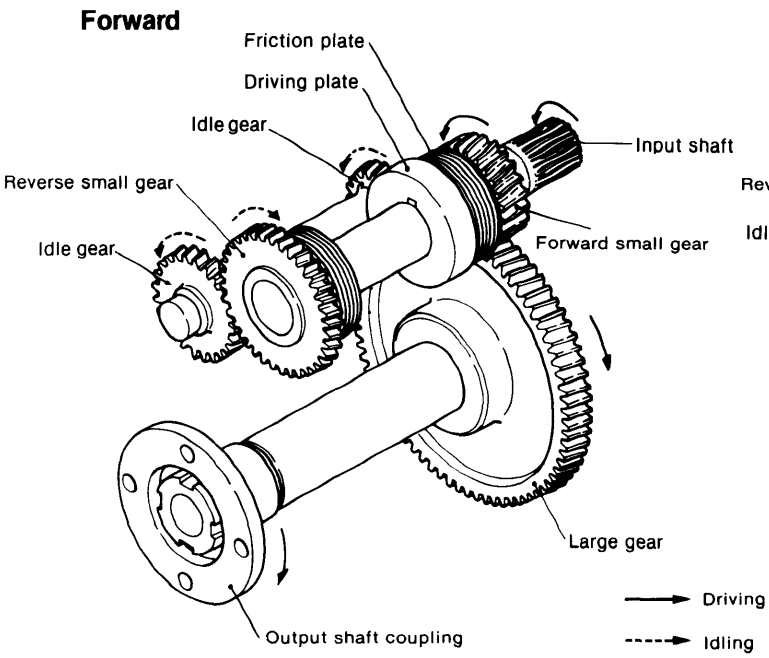

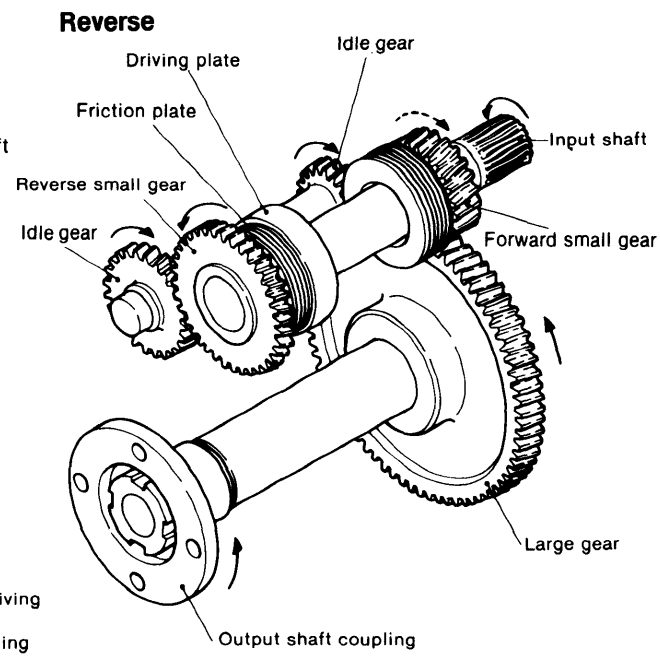

1-4 Drawing

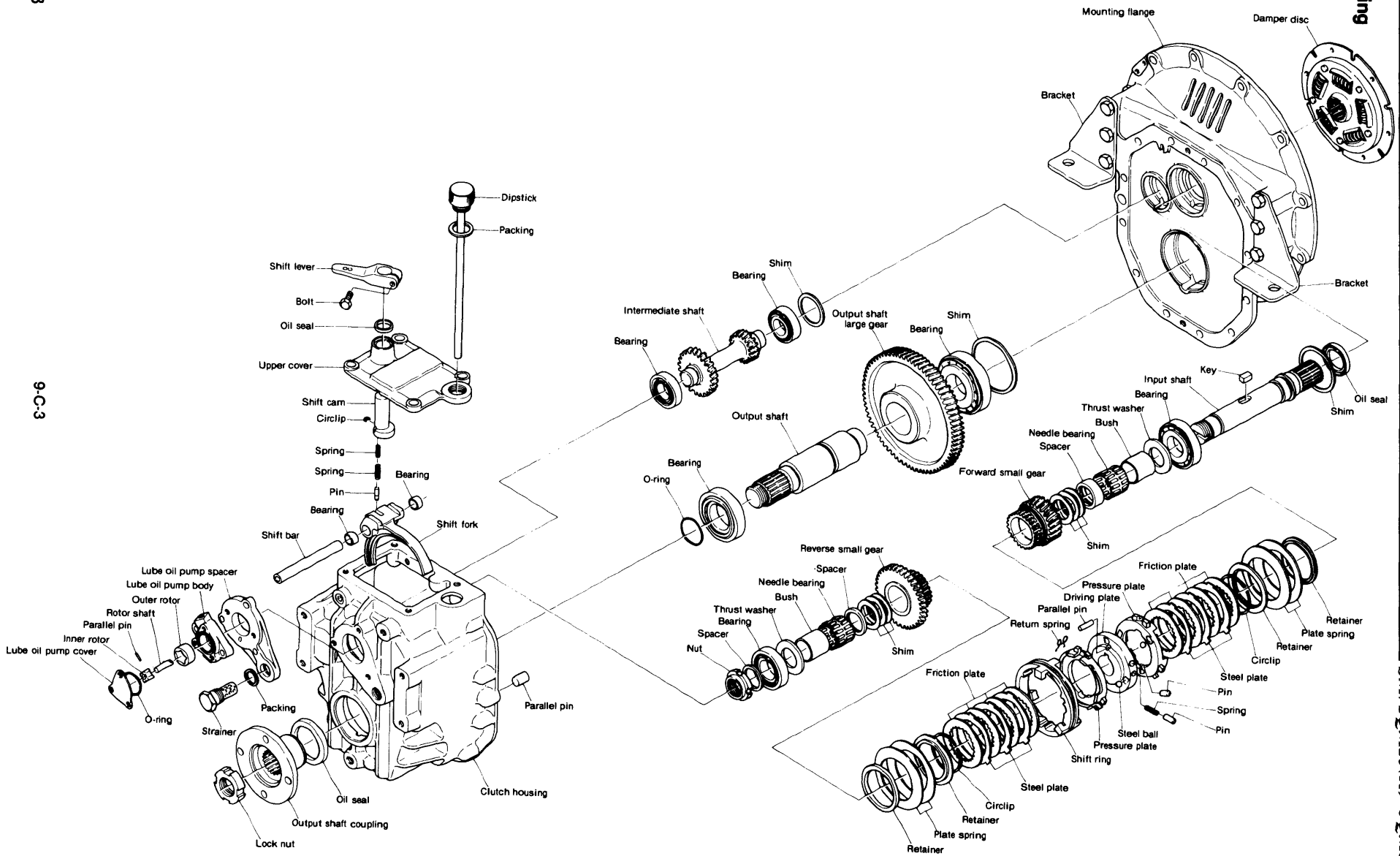
Mounting flange
Damper disc
Bracket
Bracket
Dipstick
Packing
Shift lever
Bolt
Oil seal
Upper cover
Shift cam
Circlip
Spring
Spring
Pin
Bearing
Bearing
Shift fork
Shift bar
Lube oil pump spacer
Lube oil pump body
Outer rotor
Rotor shaft
Parallel pin
Inner rotor
Lube oil pump cover
O-ring
Packing
Strainer
Oil seal
Output shaft coupling
Lock nut
Clutch housing
Parallel pin
Shim
Bearing
Intermediate shaft
Bearing
Output shaft large gear
Shim
Bearing
Output shaft
Bearing
O-ring
Reverse small gear
Spacer
Needle bearing
Bush
Thrust washer
Bearing
Spacer
Nut
Shim
Key
Input shaft
Bearing
Thrust washer
Bush
Needle bearing
Spacer
Forward small gear
Shim
Oil seal
Shim
Friction plate
Pressure plate
Driving plate
Parallel pin
Return spring
Retainer
Plate spring
Retainer
Circlip
Steel plate
Pin
Spring
Pin
Steel ball
Pressure plate
Shift ring
Friction plate
Steel plate
Circlip
Retainer
Plate spring
Retainer

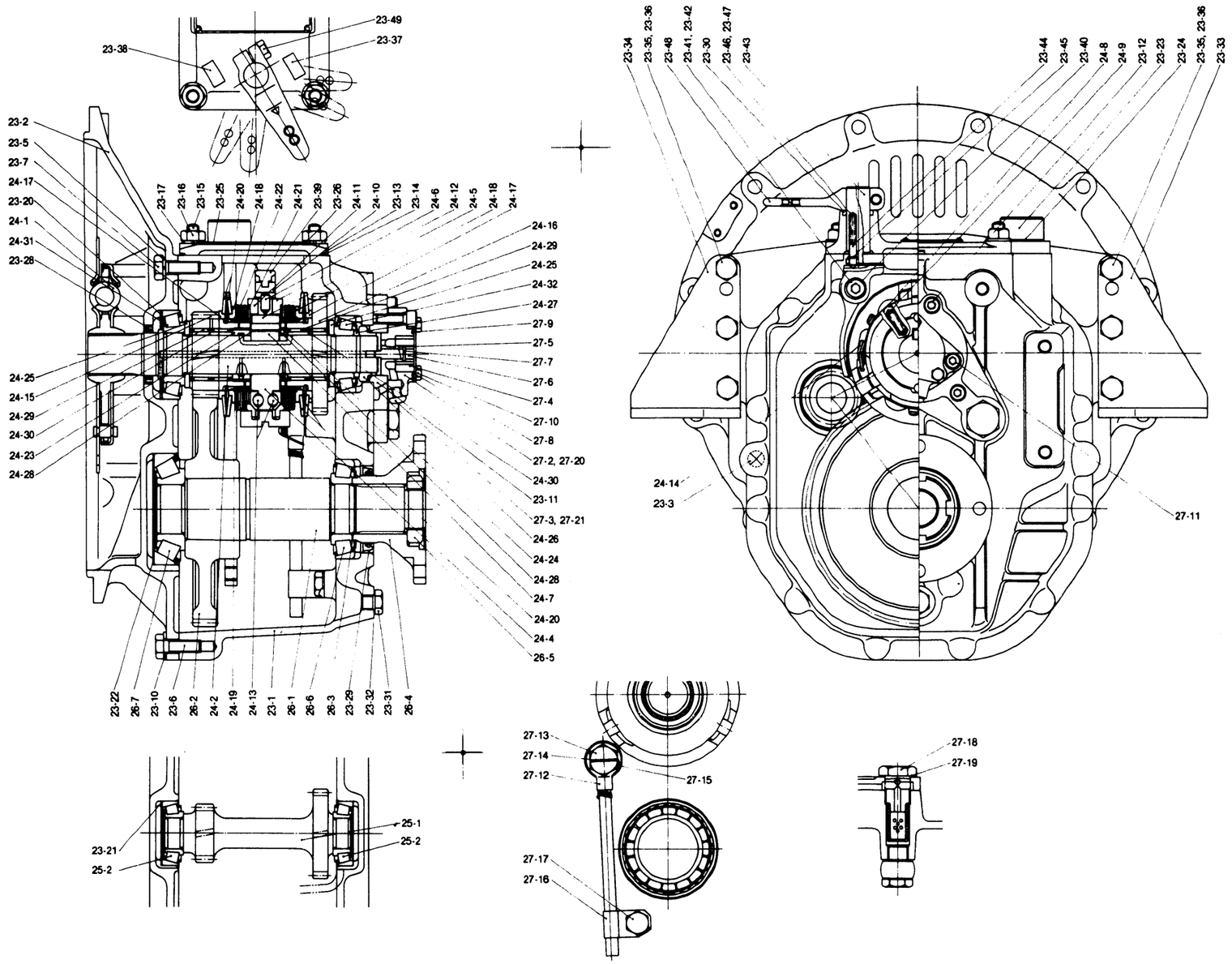

23-1	HOUSING, clutch	24-13	STEEL BALL (8mm)
23-2	FLANGE, mounting	24-14	SPRING, return
23-3	PARALLEL PIN	24-15	GEAR Z = 24, forward i = 3.00
23-5	LOCK WASHER 10		GEAR Z = 32, forward i = 2.03
23-6	BOLT M10 × 30 (SUS)	24-16	GEAR Z = 36, reverse
23-7	BOLT M10 × 30	24-17	RETAINER (A)
23-10	WASHER 10 (SUS)	24-18	RETAINER (B)
23-11	SPACER, lube oil pump	24-19	CIRCLIP
23-12	BOLT M8 × 22	24-20	SPRING
23-13	COVER (upper)	24-21	DISC, friction
23-14	PACKING, cover	24-22	PLATE
23-15	STUD M10 × 25	24-23	SPACER (A)
23-16	NUT M10	24-24	SPACER (B)
23-17	LOCK WASHER 10	24-25	WASHER, thrust
23-20	SHIM SET, input shaft	24-26	NUT
23-21	SHIM SET, astern idle shaft	24-27	SPACER
23-22	SHIM SET, output shaft	24-28	SHIM SET, input, shaft
23-23	DIPSTICK w/BREATHER, lube oil	24-29	NEEDLE BEARING
		24-30	BUSH
23-24	PACKING 27	24-31	ROLLER BEARING #30207
23-25	LABEL		
23-26	RIVET	24-32	ROLLER BEARING #30206
23-28	OIL SEAL (SB35477), input shaft	25-1	IDLE GEAR Z = 26:17, i = 3.00
23-29	OIL SEAL (TC54709), output shaft		IDLE GEAR Z = 26:24, i = 2.03
23-30	OIL SEAL (SD20264), cover	25-2	ROLLER BEARING #30205
23-31	PLUG M12		
23-32	PACKING 12	26-1	OUTPUT SHAFT
23-33	BRACKET (A)	26-2	GEAR, output, i = 3.00
23-34	BRACKET (B)		GEAR, output, i = 2.03
23-35	BOLT M10 × 28	26-3	O-RING S—38
23-36	LOCK WASHER 10	26-4	COUPLING, output
23-37	LABEL, forward	26-5	LOCK NUT
23-38	LABEL, reverse	26-6	ROLLER BEARING #30208
23-39	FORK ASSEMBLY, shift (inc. 23-40)	26-7	ROLLER BEARING #30308D
23-40	BEARING		
23-41	SHAFT, shift	27-1	PUMP ASSEMBLY, lube oil (inc. 27-2 ~ 10, 12)
23-42	PLUG		
23-43	CAM, shift	27-2	BODY, lube oil pump
23-44	PIN	27-3	PLUG
23-45	CIRCLIP	27-4	ROTOR (OUTER)
23-46	SPRING (A)	27-5	ROTOR (INNER)
23-47	SPRING (B)	27-6	SHAFT, rotor
23-48	LEVER, shift	27-7	PARALLEL PIN
23-49	BOLT M8 × 25	27-8	COVER, lube oil pump
24-1	DISC, dumper	27-9	O-RING
24-2	INPUT SHAFT	27-10	BOLT M6 × 10
24-3	PLATE ASS'Y driving (inc. 24-4 ~ 6)	27-11	BOLT M8 × 22
		27-12	PIPE, lube oil
24-4	PLATE, driving	27-13	JOINT BOLT 10
24-5	PARALLEL PIN	27-14	PACKING 16
24-6	PARALLEL PIN	27-15	WIRE 1.0
24-7	KEY	27-16	RETAINER, pipe
24-8	PIN	27-17	BOLT M10 × 14
24-9	SPRING	27-18	STRAINER, lube oil
24-10	RING, shifting	27-19	PACKING 20
24-11	PLATE (L), pressure	27-20	PACKING, pump body
24-12	PLATE (R), pressure	27-21	PACKING 8

2. Installation

2-1 Installation angle

During operation the angular inclination of the gearbox in the longitudinal direction must be less than 20° relative to the water line.

2-2 Cooling System

Because of the high efficiency of this marine gear box, an oil cooler is not required. Proper ventilation of the engine and marine gear compartment should be ensured, however. The operating temperature of the marine gear oil should not exceed 130°.
An optional cooling system is available for the KH18.
When so equipped, there are two outlets for connection to the engine cooling system. Direction of coolant flow may be routed through either of these outlets. Zinc plugs are used to prevent corrosion and these plugs should be checked monthly for any sign of excessive corrosion and changed if necessary.

2-3 Remote control unit

This marine gearbox is designed for single lever control to permit reversing at full engine speed (e.g. to avoid danger, etc.). Normally, Morse or Teleflex single lever control is employed. During installation, make sure that the remote control lever and shift lever on the marine gearbox are coordinated. Shifting the lever toward the propeller side produces forward movement, while moving the lever toward the engine side causes the vessel to move in the reverse direction.
To connect the linkage, the operating cable must be positioned at right angles to the shift lever when the shift lever is in the neutral position.
The shift play, measured at the pivot point of the shift lever, must be at least 35mm to each side (reverse and forward) from the neutral position. A greater shift play has no adverse effect on the marine gearbox. After connecting the linkage, confirm that the remote control and the shift lever on the marine gearbox work properly.
A typical linkage arrangement is illustrated in the figure below.

(1) Control from bow side

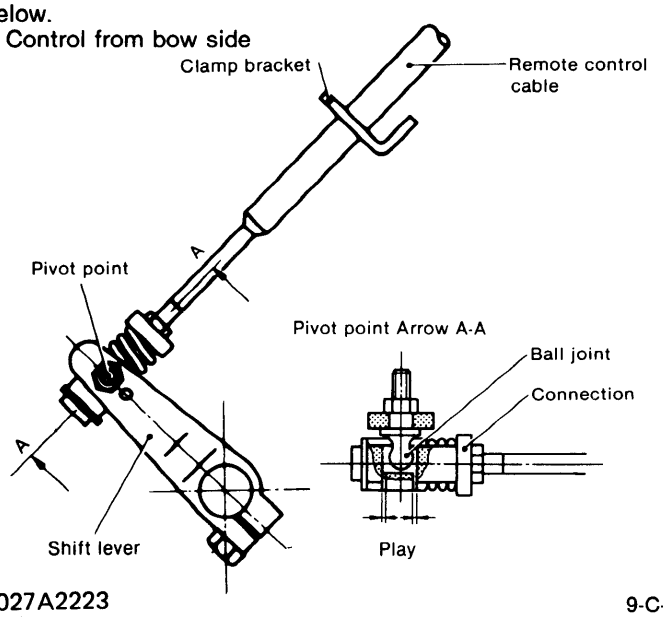

(2) Control from stern side

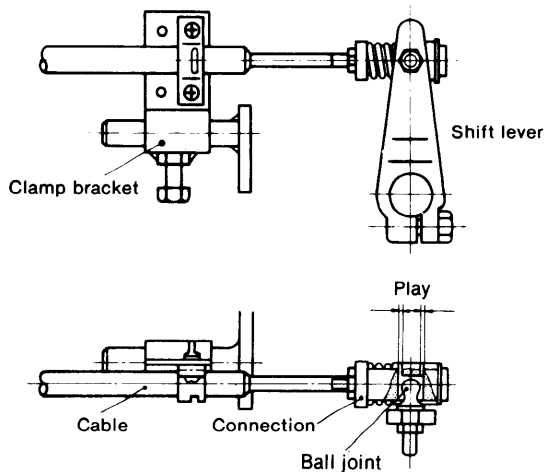

NOTE: Since the cable stroke may be insufficient, two holes are drilled in the shift lever.
When the cable is attached to the hole 52mm (2.0472in.) from the center of the rotation of the shift lever, the strokes from the center to the forward and reverse sides must be 30mm (1.1811in.), resepectively. When the cable is attached to the hole 60mm (2.3622in.) from the center of the rotation of the shift lever, these strokes must be 35mm (1.3780in.).
(2.0472in.) from the center of the rotation of the shift lever, the strokes from the center to the forward and reverse sides must be 30mm (1.1811in.), respectively. When the cable is attached to the hole 60mm (2.3622in.) from the center of the rotation of the shift lever, these strokes must be 35mm (1.3780in.).

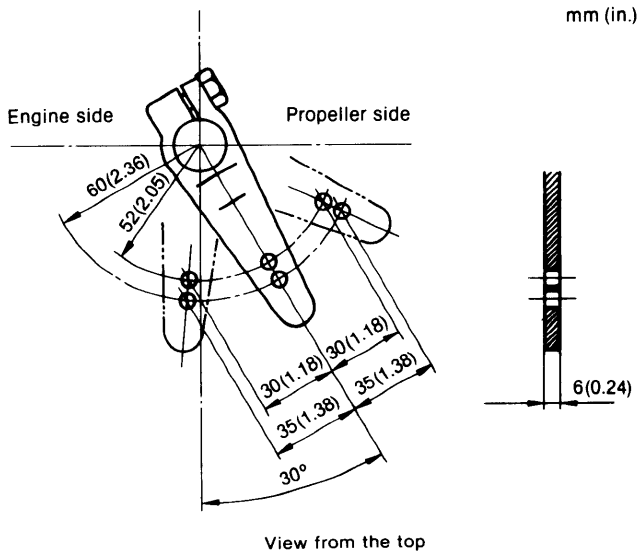

3. Operation and Maintenance

3-1 Lube oil

(1) Oil level
The oil level should be checked each month and must be maintained between the grooves on the dipstick. The upper groove indicates the maximum oil level and the lower groove is the minimum oil level. When checking the oil level with the dipstick, do not screw in the oil filler screw; it should rest on top of the oil filler hole.

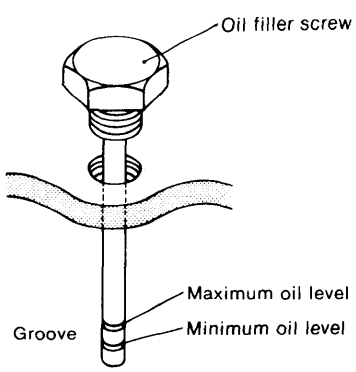

(2) Oil change
Change the oil after the first 100 hours of operation, and every 300 hours of operation thereafter. When adding oil between oil changes, always use the same type of oil that is in the marine gearbox.

(3) Recommended brands of lube oil

Supplier	Brand name
SHELL	SHELL DEXRON
CALTEX	TEXAMATIC FLUID (DEXRON)
ESSO	ESSO ATF
MOBIL	MOBIL ATF220
B.P. (British Petroleum)	B.P. AUTRAN DX

3-2 Precautions

Do not stop the shift lever halfway between the neutral and forward or reverse positions. The lever must be set to the neutral position or shifted into forward or reverse in a single motion.

3-3 Upper cover

The internal shifting mechanism has been carefully aligned at the factory. Improper removal of the upper cover can cause misalignment. If the upper cover must be removed, proceed as follows:

—Before removing the cover, put alignment marks on the upper cover and the case to facilitate accurate installation.

—When installing the upper cover, put the shift lever in neutral so that the cam lobe on the shift lever engages the groove on the internal shift mechanism. When the cam lobe and groove are engaged properly there will be no clearance between the body and the upper cover. Do not use packing or gaskets when installing the upper cover.

—After making sure that the cam lobe and notches are aligned properly, securely tighten all the bolts. After tightening the bolts, move the lever back and forth. Positive contact should be felt and a click should be clearly audible as the gears shift; otherwise, the cam and notch are not properly engaged, and the cover must be loosened and readjusted until proper engagement is achieved.

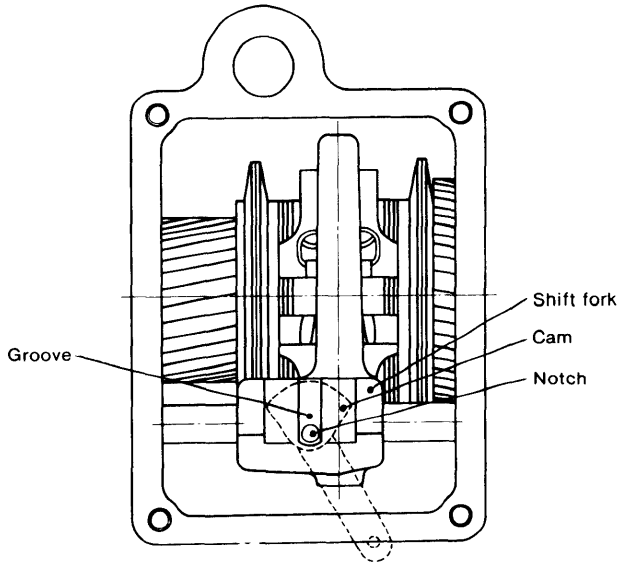

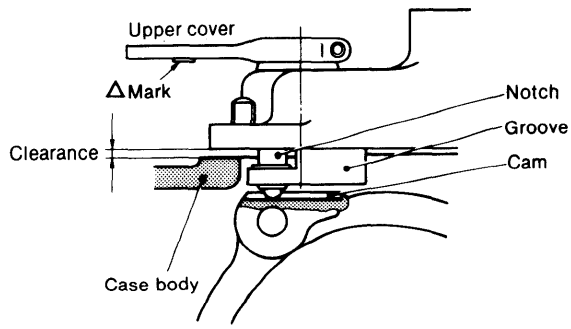

4. Inspection and Servicing

4-1 Clutch case

(1) Check the clutch case with a test hammer for cracking. Perform a color check when required.
If the case is cracked, replace it.

(2) Check for staining on the inside surface of the bearing section.
Also, measure the inside diameter of the case.
Replace the case if it is worn beyond the wear limit.

4-2 Bearing

(1) Rusting and damage
If the bearing is rusted or the taper roller retainer is damaged, replace the bearing.

(2) Make sure that the bearings rotate smoothly.
If rotation is not smooth, if there is any binding, or if an abnormal sound is heard, replace the bearing.

4-3 Gear

(1) Tooth surface wear
Check the tooth surface for pitching, abnormal wear, dents, and cracks. Repair lightly damaged gears and replace heavily damaged gears.

(2) Tooth surface contact
Check the tooth surface contact. The amount of tooth surface contact between the tooth crest and tooth flank must be at least 70% of the tooth width.

(3) Backlash
Measure the backlash of each gear, and replace the gear when it is worn beyond the wear limit.

mm (in.)

	Maintenance standard	Wear limit
Input shaft forward gear and output shaft forward gear	0.1 ~ 0.2 (0.0040 ~ 0.0079)	0.3 (0.0118)
Input shaft reverse gear and intermediate gear	0.1 ~ 0.2 (0.0040 ~ 0.0079)	0.3 (0.0118)
Intermediate gear and output shaft reverse gear	0.1 ~ 0.2 (0.0040 ~ 0.0079)	0.3 (0.0118)

(4) Forward/reverse gear spline
1) Check the spline for damage and cracking.
2) Step wear of spline
Step wear depth limit: 0.1mm (0.0040in.)

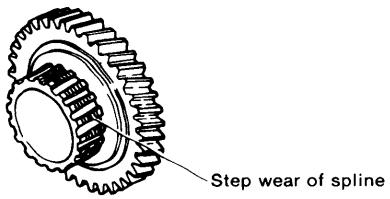

(5) Forward/reverse gear needle bearing
When an abnormal sound is produced at the needle bearing, visually inspect the rollers; replace the bearing if the rollers are faulty.

4-4 Steel plate

(1) Burning, scratching, cracking
Replace any steel plates that are discolored or cracked.

(2) Warping measurement

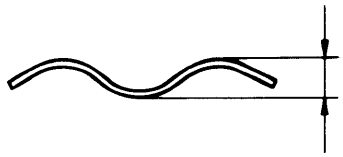

mm (in.)

	Maintenance standard	Wear limit
Warping	$1.6^{+0.10}_{-0.11}$ (0.05870 ~ 0.067)	1.4 (0.0551)

(3) Steel plate pawl width measurement

Measure the width of the steel plate pawl and the width of the pressure plate; replace the plate when the clearance exceeds the wear limit.

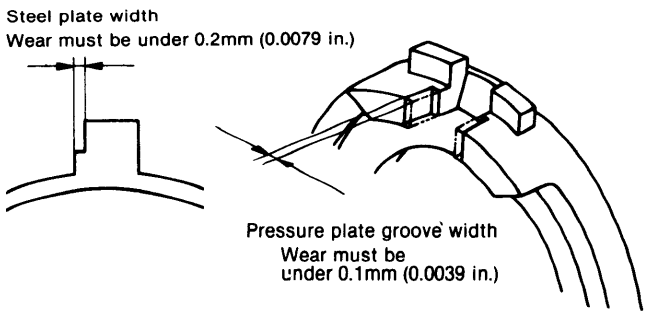

mm (in.)

	Maintenance standard	Wear limit
Steel plate width	$12^{0}_{-0.2}$ (0.4646 ~ 0.4724)	Worn 0.2 (0.0079)
Pressure plate groove	$12^{+0.1}_{0}$ (0.4724 ~ 0.4764)	Worn 0.1 (0.0039)
Clearance	0 ~ 0.3 (0 ~ 0.0118)	0.3 ~ 0.6 (0.0118 ~ 0.0236)

4-5 Friction plate

(1) Check the friction plate for burning, scoring, or cracking.
Repair the plate when the damage is light and replace the plate if the damage is heavy.

(2) Friction surface wear
Measure the thickness of the friction plate, and replace the plate when it is worn beyond the wear limit.

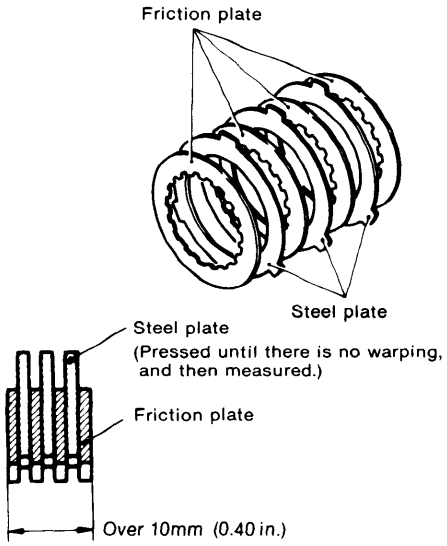

mm (in.)

	Maintenance standard	Wear limit
Friction plate thickness	$1.7\ ^{0}_{-0.05}$ (0.0650 ~ 0.0670)	1.5 (0.0591)

The assembled friction plate and steel plate dimensions must be over 10mm (0.0040in.).

Both sides of the friction plate have a 0.35mm copper sintered layer. Replace the friction plate when this layer is worn more than 0.2mm on one side (standard thickness $1.7\ ^{0}_{-0.05}$ mm). However, the sum of the wear of the four friction plates must not exceed 0.8mm. When this value is exceeded, replace all friction plates. In unavoidable circumstances, it is permissible to replace only the friction plate with the greatest amount of wear.

(3) Friction plate and gear spline back clearance
Measure the clearance between the friction plate spline collar and the output shaft gear spline, and replace the plate or spline when they are worn beyond the wear limit.

mm (in.)

	Maintenance standard	Wear limit
Standard backlash	0.20 ~ 0.61 (0.0079 ~ 0.0240)	0.9 (0.0354)

4-6 Pressure plate

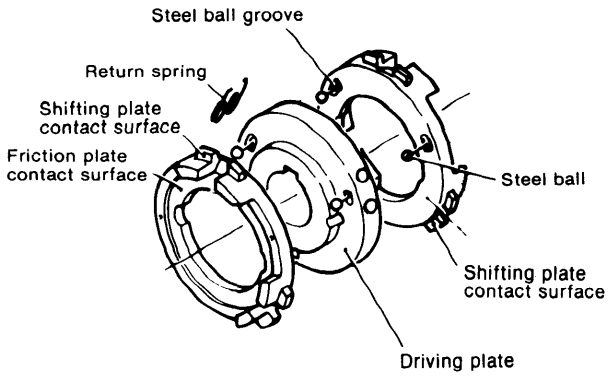

(1) Steel ball groove
Check the steel ball groove for stains and wear.
Replace the pressure plate if the groove is noticeably worn.

(2) Friction plate contact surface
Check the contact face for stains and damage.

(3) Shifting plate contact surface

(4) Parts wear measurement

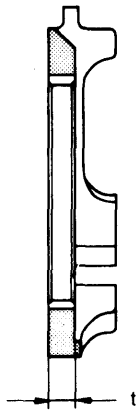

mm (in.)

	Maintenance standard	Wear limit
Thickness: t	$6.6\ ^{0}_{-0.2}$ (0.2520 ~ 0.2598)	6.3 (0.2480)

(5) Return spring permanent strain.
Make sure the length (free length) is within the values specified in the figure.

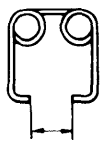

17 ±0.5mm (0.6496~0.6890 in.)

4-7 Driving plate

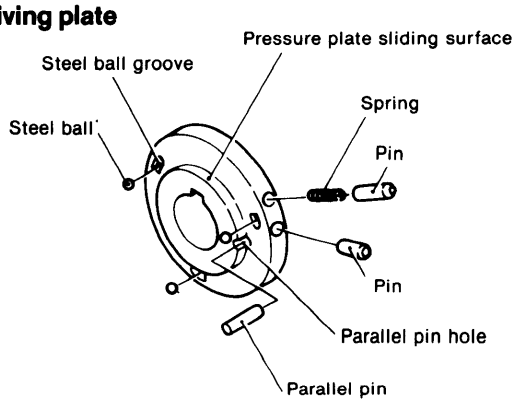

(1) Check the key groove for scoring and cracking, and the output shaft fitting section for burning. Repair if the damage is light and replace the driving plate if the damage is heavy.
(2) Outside diameter of pressure plate sliding part; others

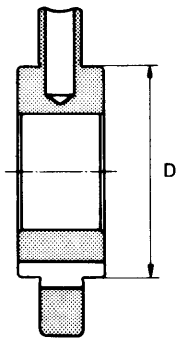

mm (in.)

	Maintenance standard	Wear limit
Outside diameter: D	$\varnothing 59^{-0.060}_{-0.134}$ (2.3176 ~ 2.3205)	ø58.8 (2.3150)

(3) Steel ball groove wear and stains.
(4) Determine the amount of wear and play of both the axial and circumferential direction pins.
(5) Spring permanent strain

mm (in.)

	Maintenance standard	Wear limit
Spring free length	32.85 (1.2933)	32 (1.2598)

(6) Pin end wear.

4-8 Retainer

(1) Check for stains and damage on the friction plate contact surface.
(2) Check for wear and cracking on the plate spring contact surface.
(3) Measurement of Dimensions

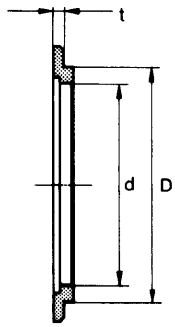

mm (in.)

	Maintenance standard	Wear limit
d	$\varnothing 57.5^{+0.106}_{+0.060}$ (2.2661 ~ 2.2680)	ø57.8 (2.2756)
D	$\varnothing 66^{0}_{-0.1}$ (2.5945 ~ 2.5984)	ø65.7 (2.5866)
t	$2.8^{0}_{-0.08}$ (0.1071 ~ 0.1102)	2.6 (0.1024)

4-9 Plate spring

(1) Permanent strain

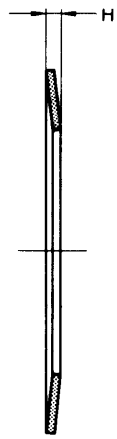

mm (in.)

	Maintenance standard	Wear limit
H: when plate spring is free	$6.25^{\pm 0.1}$ (0.2421 ~ 0.2500)	6.0 (0.2362)

4-10 Thrust collar

The gear side of the thrust washer has a 0.3mm copper sintered layer. Replace the thrust collar when the thickness is less than 4.75mm (standard thickness: $5^{0}_{-0.1}$ mm).

4-11 Shift ring

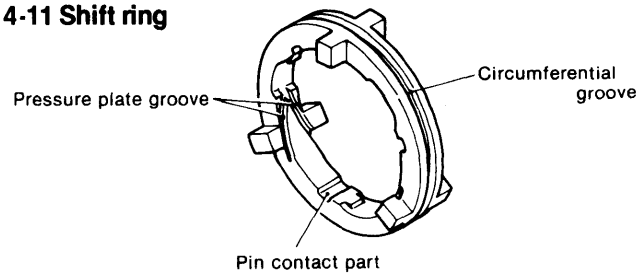

(1) Circumferential groove wear.

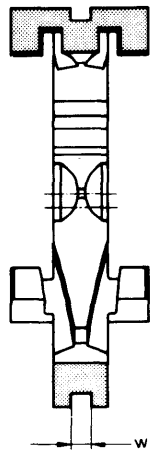

mm (in.)

	Maintenance standard	Wear limit
Shifting groove :w	$6^{+0.1}_{0}$ (0.2362 ~ 0.2402)	6.3 (0.2480)

(2) Pressure plate groove wear.
Whenever uneven wear and/or scratches are found, replace with a new part.
(3) Parallel pin contact part wear.
Whenever uneven wear and/or scratches are found, replace with a new part.

4-12 Shift fork and shift lever

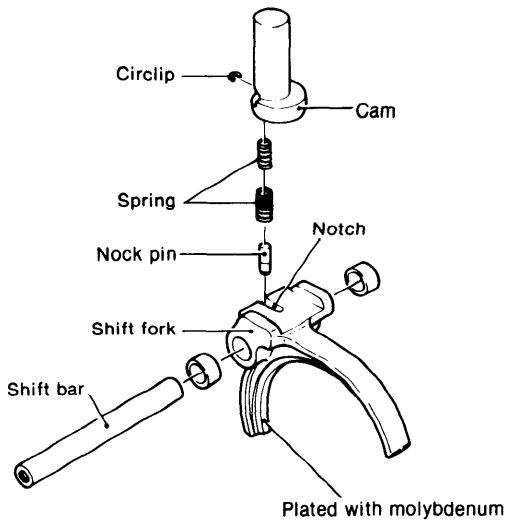

(1) End wear.
The shift ring contact surface of the shift fork is plated with molybdenum (thickness: 0.04—0.05mm). If this plating is peeled or worn to such an extent that the base metal of the shift fork is exposed, replace the shift fork.
(2) Cam surface wear and stains.
Whenever uneven wear and/or scratches are found, replace with a new part.
(3) Pin part play.
Whenever uneven wear and/or scratches are found, replace with a new part.
(4) Notch end wear.
Whenever uneven wear and/or scratches are found, replace with a new part.

4-13 Output shaft

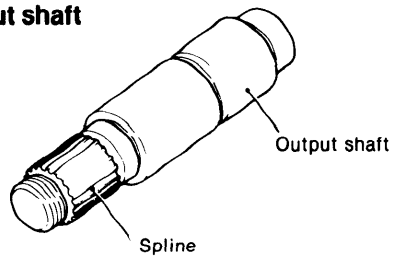

(1) Key groove.
Whenever uneven cracks and/or stains are found, replace with a new part.

4-14 Damper disc

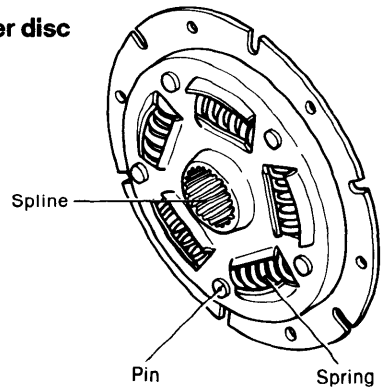

(1) Spline part
Whenever uneven wear and/or scratches are found, replace with a new part.
(2) Spring.
Whenever uneven wear and/or scratches are found, replace with a new part.
(3) Pin wear.
Whenever uneven wear and/or scratches are found, replace with a new part.

4-15 Input shaft

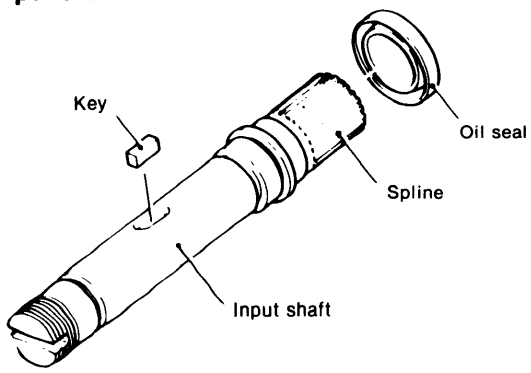

(1) Spline part
Whenever uneven wear and/or scratches are found, replace with a new part.
(2) Surface of oil seal.
If the sealing surface of the oil seal is worn or scratched, replace.

4-16 Intermediate shaft

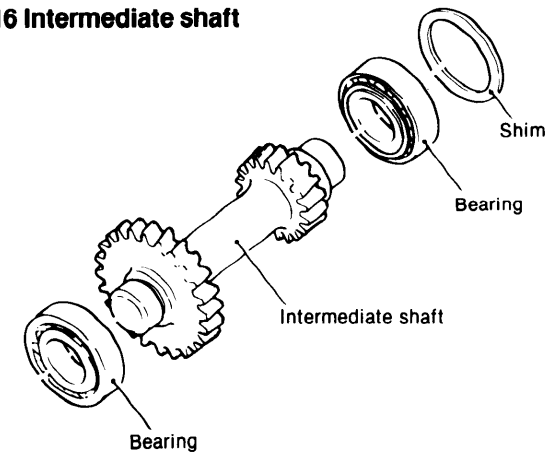

(1) Needle bearing dimensions, staining.
Check the surface of the roller to see whether the needle bearing sticks or is damaged. Replace if necessary.

4-17 Lube oil pump

When the discharge pressure of the oil pump is extremely low, check the oil level. If it is within the prescribed range, the oil pump must be inspected.

mm (in.)

Clearance	Maintenance standard	Wear limit
Outer rotor and pump body clearance :C_1	0.120 ~ 0.161 (0.0047 ~ 0.0063)	0.25 (0.0098)
Outer rotor and inner rotor clearance :C_2	0.05 ~ 0.105 (0.0020 ~ 0.0041)	0.15 (0.0059)
Pump body and inner rotor, outer rotor side clearance :C_3	0.01 ~ 0.06 (0.0004 ~ 0.0024)	0.15 (0.0059)

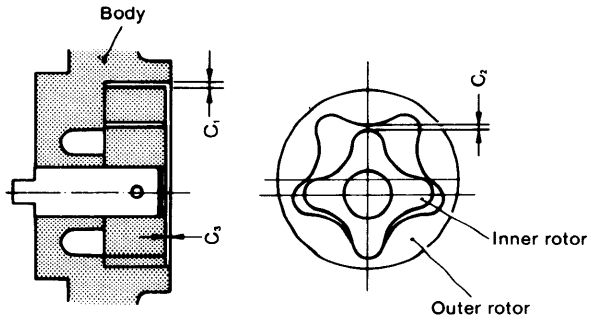

5. Disassembly

5-1 Disassembling the clutch and accessories

(1) Remove the drain plug and packing, and drain the oil from the clutch.
(2) Uncaulk the output shaft lock nut, and remove the nut, using a disassembly tool.

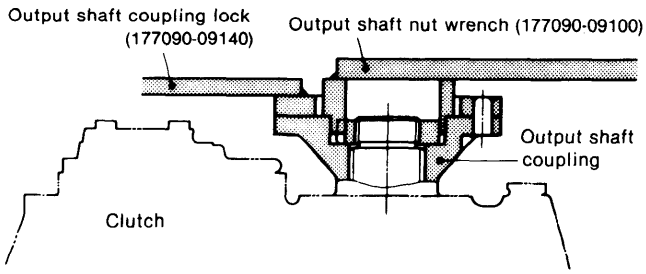

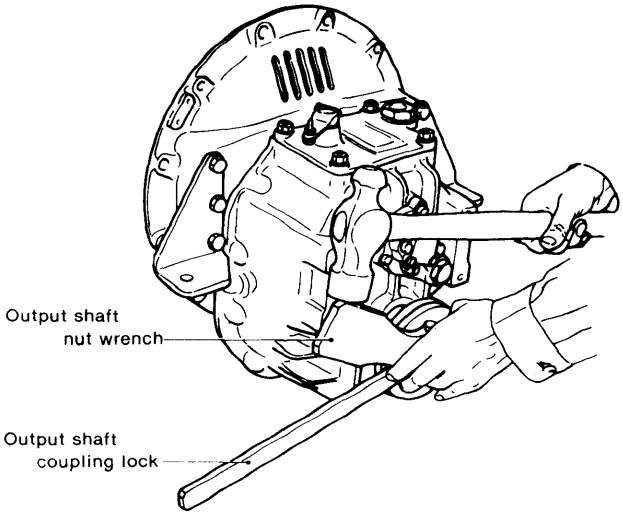

(3) Remove the output coupling.
(4) Remove the dipstick and packing.

(5) Remove the case cover M10 nut super lock washer; remove the case cover, with the operating lever, shift cam, etc. in position.
(6) Remove the shift bar plug with a hexagonal bar spanner (width across flats: 8mm (0.0394in.), and pull the shift bar from the case, using the M10 pulling bolt at the end of the shift bar.

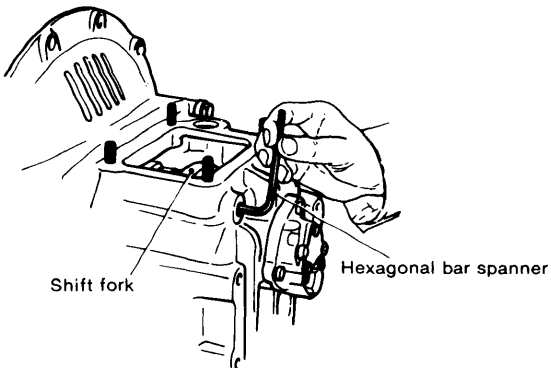

(7) Remove the shift fork.

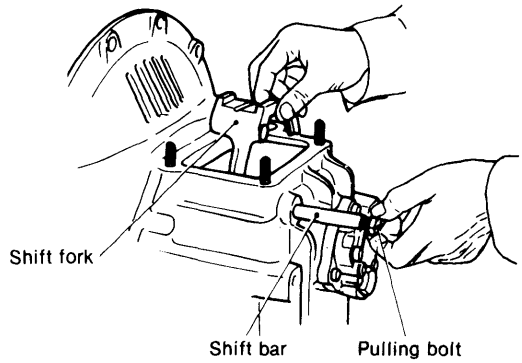

(8) Remove the M8 bolt (with a hole) from the lube oil pump body. Remove the lube oil pump body as a unit.

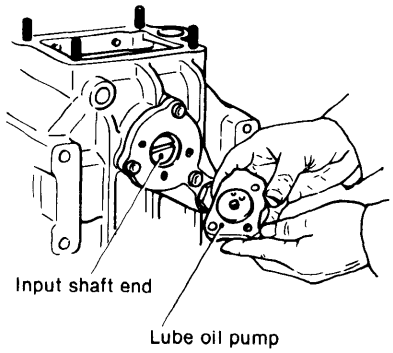

(9) Remove the M10 bolt and super lock washer on the mounting flange.

NOTE: Stainless steel bolts and plain washers are used on the bottom of the case in four locations. When reassembling, make sure they are reinstalled in the proper position.

(10) Screw the M10 bolt into the M10 pulling bolt hole of the mounting flange, and remove the mounting flange. Do not remove the parallel pin.

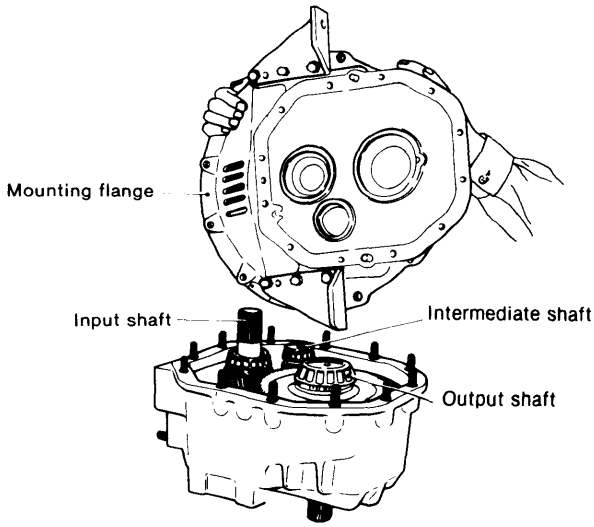

(11) Remove the output shaft, intermediate shaft, and input shaft from the case.

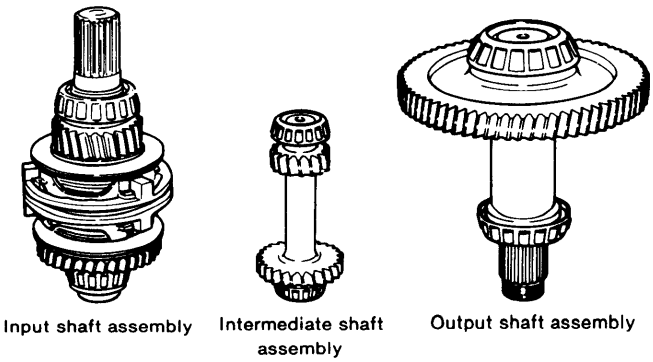

(12) Remove the strainer and packing.

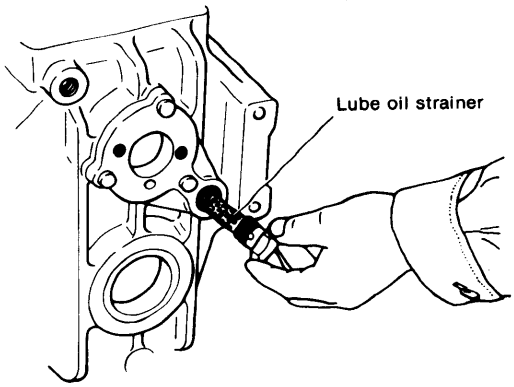

(13) After removing the bolt (with a hole), disassemble the lube oil pump body collar.

(14) Heat the case body to about 100°C, and remove the outer race of the input shaft and output shaft bearings. If the outer races are difficult to remove, tap them out with a plastic hammer from the rear of the case, or pull them by using the pulling groove in the case at the rear of the races.

(15) Remove the outer race of the bearing from the mounting flange as described in step (14) above.

(16) Remove the input shaft, intermediate shaft and output shaft adjusting plates.

NOTE: If the following parts are not replaced, the adjusting plates may be reused without readjustment. However, if even one part is replaced, readjustment is necessary.
Input shaft part: 24-4, 24-23, 24-24, 24-25, 24-28, 24-30, 24-31
Intermediate shaft part: 25-1, 25-2
Output shaft part: 26-7, 26-1, 26-6

(17) Pull the oil seal from the case.

(18) Pull the oil seal from the mounting flange.

5-2 Disassembling the input shaft

(1) Disassemble the crown nut and collar using a special disassembly tool.

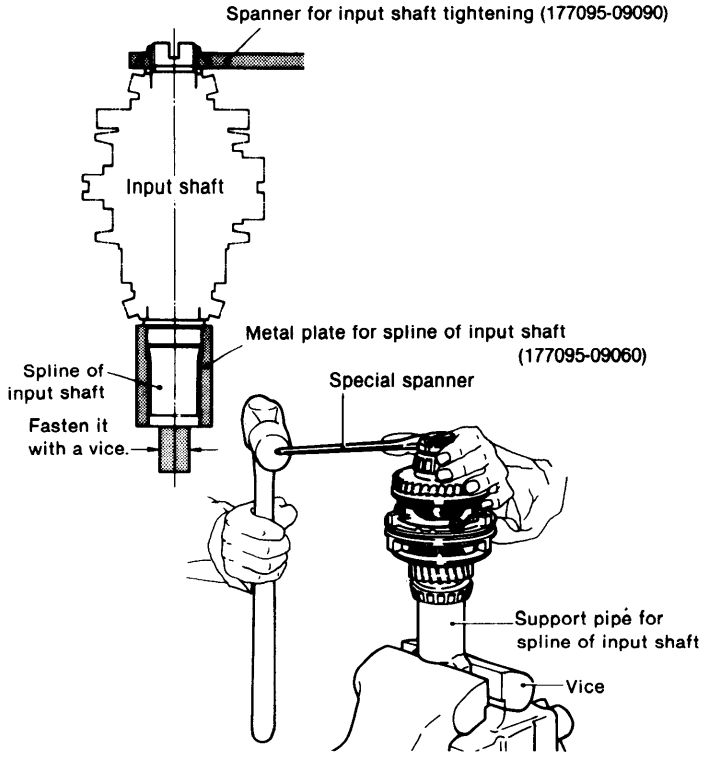

(2) Tap the threaded end of the input shaft with a hammer while inserting the special tool between the bearing and the forward small gear; or pull out the input shaft with a puller.

NOTE 1: When removing the shaft, place spacers between the shaft and the press to prevent damage.

NOTE 2: Make sure that the forward small gear parts and reverse small gear parts are not mixed up once they are removed.

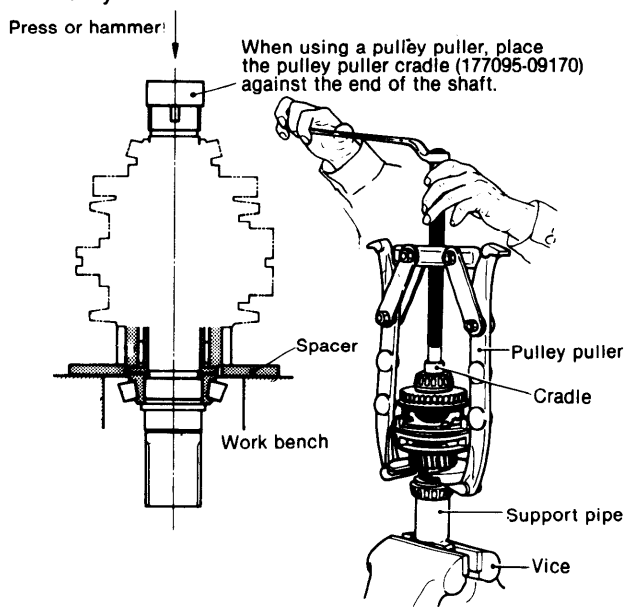

(3) Remove the adjusting plate.

NOTE: Record the thickness of the adjusting plate to facilitate reassembly.
If parts are not replaced, the adjusting plate may be reused without readjustment. However, if even one part is replaced, readjustment is required.

(4) Remove the key.
To facilitate removal, clamp the key with a vice.

(5) Remove the adjusting plate.

NOTE: Record the thickness of the adjusting plate to facilitate reassembly.
If parts are not replaced, the adjusting plate may be reused without adjustment. However, if even one part is replaced, readjustment is required.

(6) Remove the spacer and needle bearing.
(7) Using a disassembly tool, remove the bearing inner race, thrust collar, and bearing from the input shaft with a press or hammer.

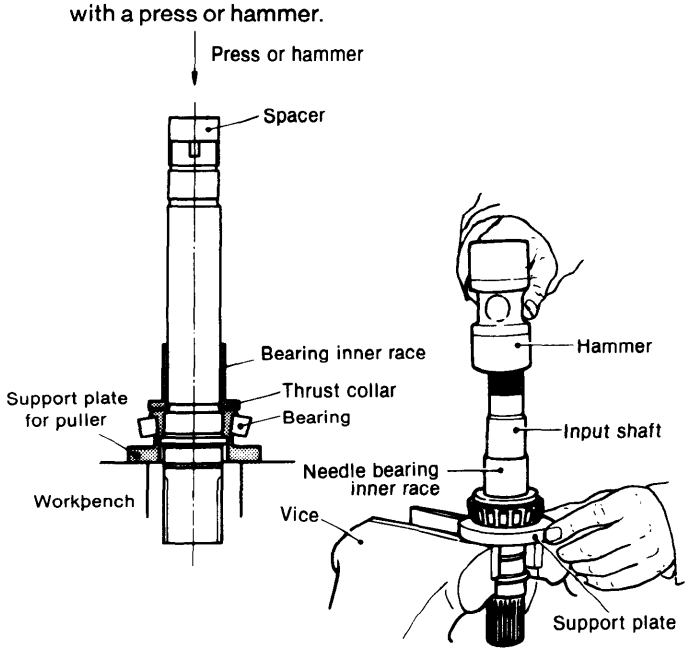

(8) Remove the friction plates and steel plates from the forward small gear.
(9) Using a disassembly tool compress the plate spring, and remove the circlip from the forward small gear.

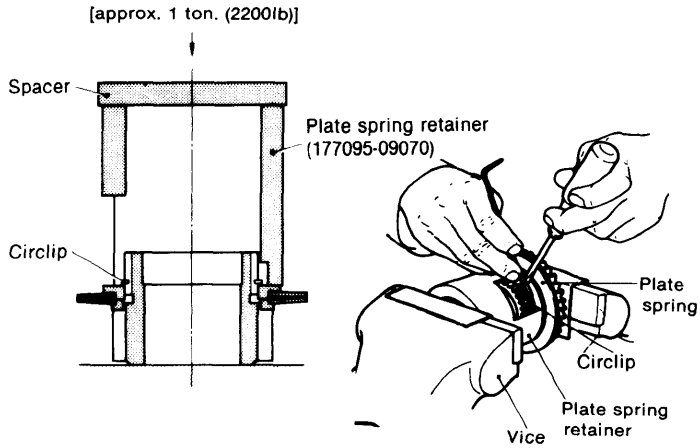

(10) Remove the retainer and plate spring.

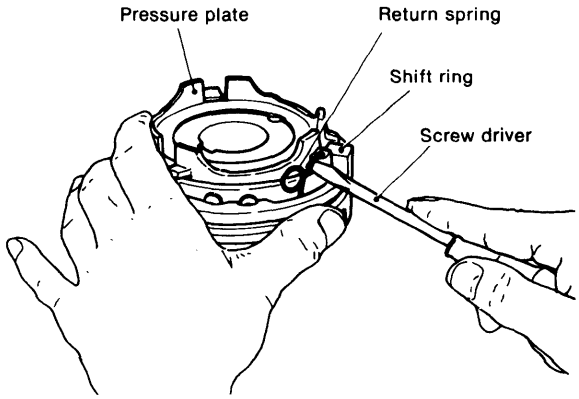

(11) Remove the parts from the reverse small gear as described in steps (8)—(10) above.
(12) Remove the pressure plate return spring; remove the pressure plate and steel ball.
(13) Remove the shift ring.
To disassemble, remove the three knock pins, When disassembling the shift ring, cover it with a cloth to prevent it getting lost.
(14) Remove the knock pin and spring from the drive plate.

5-3 Disassembling the output shaft

(1) Remove the O-ring.
(2) Pull the bearing from the output shaft.

NOTES: 1) Do not disassemble the output shaft or the large gear.
NOTES: 2) If either the output shaft or the large gear is broken, replace them as a pair.

5-4 Disassembling the intermediate shaft

Pull the bearing from the intermediate shaft.

NOTE: Do not disassemble unless the intermediate shaft parts are damaged.

5-5 Disassembling the operating system

(1) Loosen the M8 bolt of the operating lever and remove the operating lever.
(2) Pull the shift cam.
(3) Push in the knock pin and remove the circlip
(4) Remove the knock pin and spring.
(5) Pull the oil seal from the case upper cover.

5-6 Disassembling the lube oil pump.

Do not disassemble the lube oil pump. Replace the entire pump assembly if the pump cannot operate at the specified value.

6. Reassembly

6-1 Reassembly precautions

(1) Before reassembling, clean all parts in washing oil, and replace any damaged or worn parts.
Remove non-dry packing agent from the mating surface with a blunt knife.

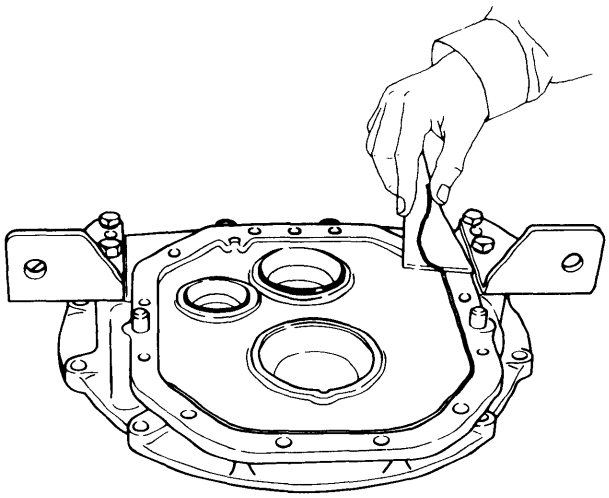

(2) Pack the oil seal and O-ring parts with grease.
(3) Coat the mating surfaces of the case with wet packing.

6-2 Reassembling the input shaft

(1) Reassembling the forward small gear and plate spring
Insert the retainer into the forward small gear so that the larger hole of the retainer faces the gear side.
1) Insert the two plate springs of the forward small gear so that their large diameter sides are opposite each other.
2) Insert the retainer and install the circlip.
3) Compress the plate spring, using the disassembly tool, and snap the circlip into the groove on the outside of the spline of the forward small gear.

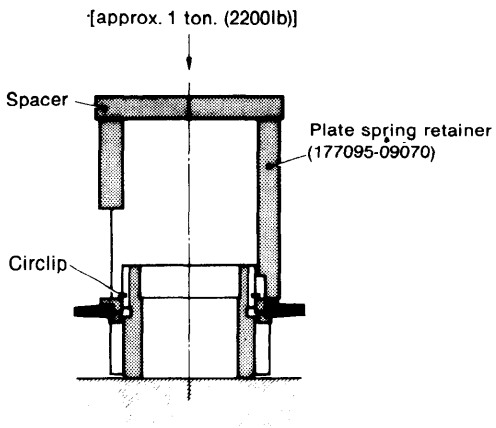

(2) Reassemble the reverse small gear and plate spring, retainer, and circlip as described in step (1) above.

(3) Determining the forward adjusting plate thickness

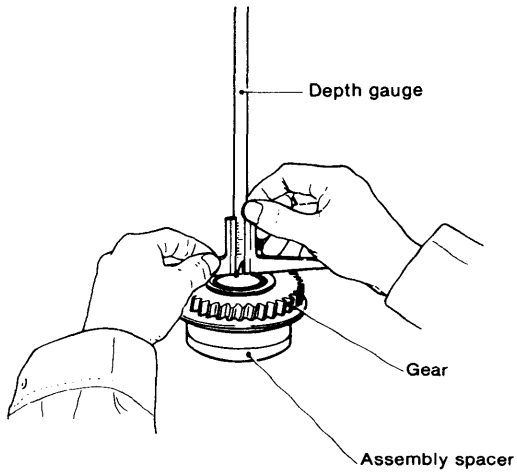

NOTE: As mentioned in section 5-2.(5), if no parts need to be replaced, the adjusting plate can be reused without adjustment.

1) Position the assembled small gear on the assembly tool so that the spline part is on the bottom; insert the spacer and bearing inner race into the gear.

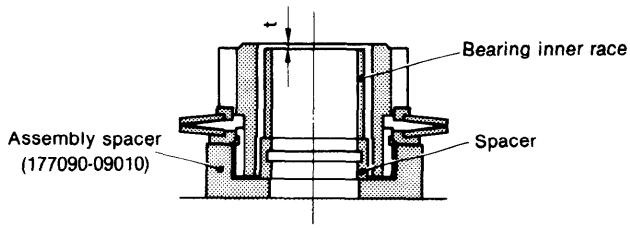

2) Adjust the thickness of the adjusting plate until it conforms to the dimension shown in figure.
3) Two adjustment plates of 0.5mm (0.0197in.) and 0.3mm (0.0118in.) are available.
Combine these plates to obtain the "t" dimension.

(4) Determine the thickness of the reverse adjusting plate by following the procedure described in step (3) above.
(5) First, insert a friction plate into the spline part of the forward small gear; next insert steel plates and friction plates alternately. Finally, insert a friction plate (four friction plates and three steel plates).
(6) Insert the friction plates and steel plates into the spline part of the reverse small gear in the same manner as described in step (5) above (four friction plates and three steel plates).

(7) Press the inner race of the bearing onto the input shaft up to the collar, using an assembly tool.

NOTE: The inner race can be installed easily by preheating it to approximately 100°C.

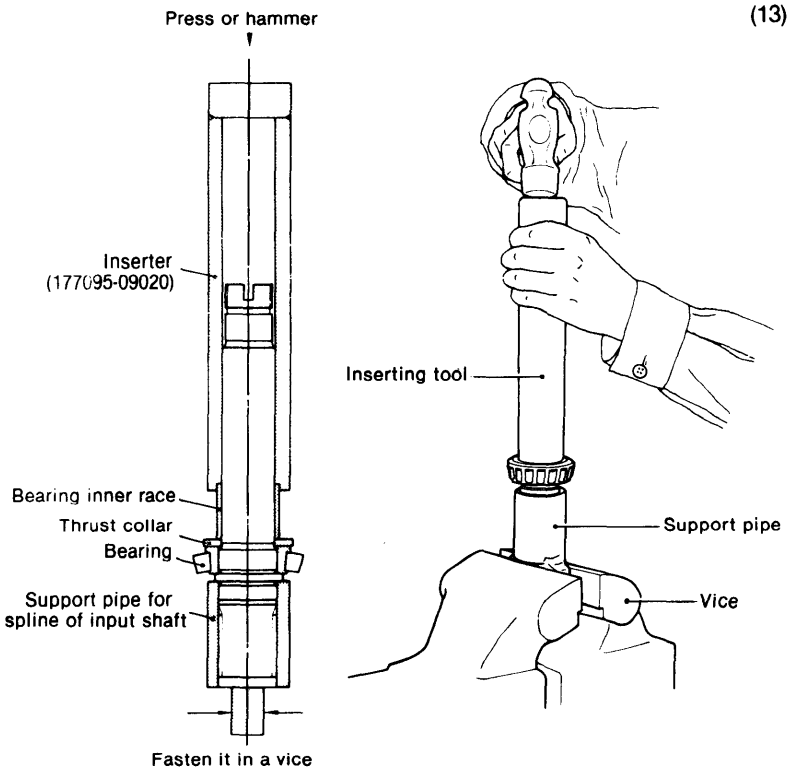

(8) Insert the thrust collar, with the sintered surface (brown surface) facing the gear side.

(9) Press the bearing inner race onto the output shaft, using an assembly tool.

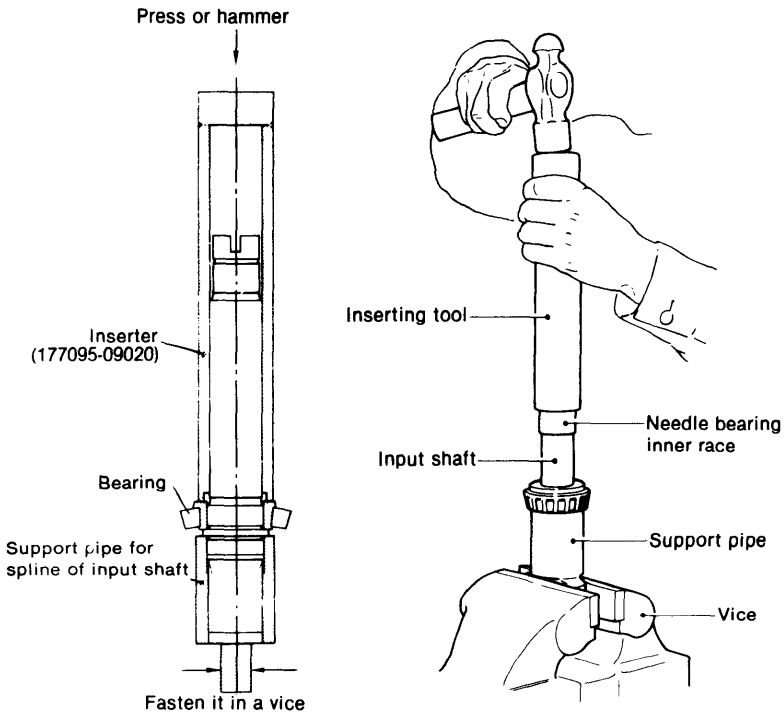

(10) Insert the needle bearing.

(11) Insert the spacer and adjusting plate.

(12) Fit the key so that the fillet side is facing the threaded part of the input shaft.

(13) Insert the forward small gear, together with the friction plates and steel plates. At this time, align the three pawls on the outside of the steel plates.

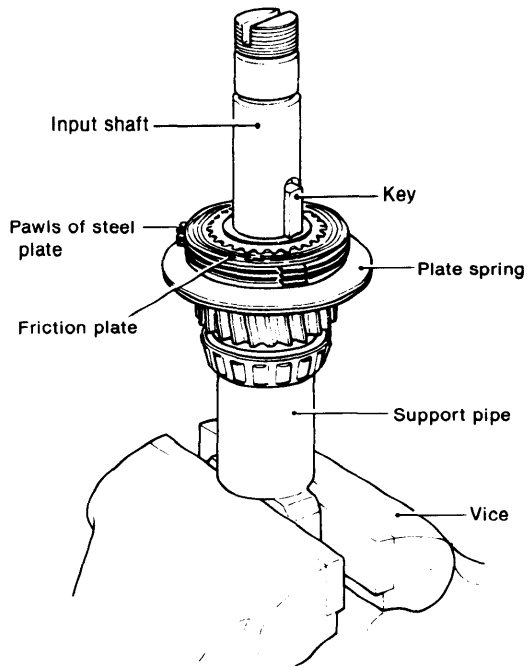

(14) Cover the friction plates and steel plates with the pressure plate so that the pawls of the steel plate fit into the three notches on the pressure plate.

NOTE: Be sure that the reverse pressure plate is correct.

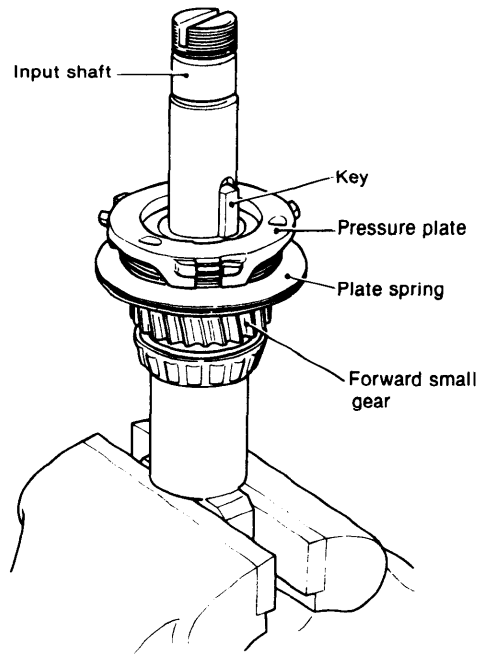

(15) Insert the three steel balls into the three grooves in the pressure plate.
(16) Insert the drive plate into the input shaft so that the side with the identification groove faces the forward small gear side.

NOTE: Make sure that the three steel balls are in the three grooves of the driving plate.
At the same time, make sure that the pin for the driving plate fits into the groove of the torque limitter for the pressure plate.

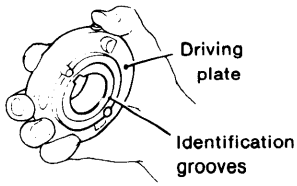

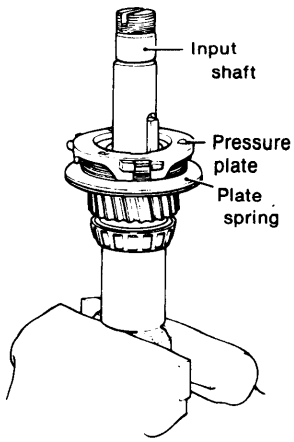

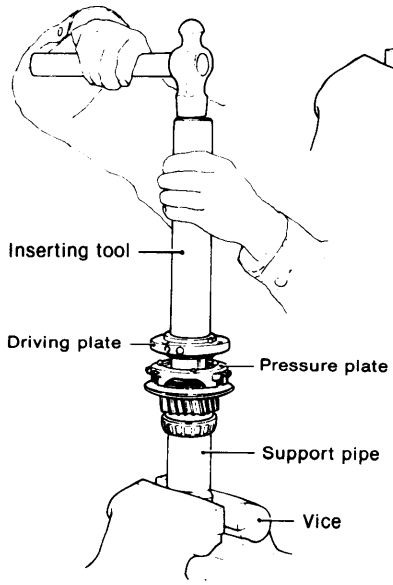

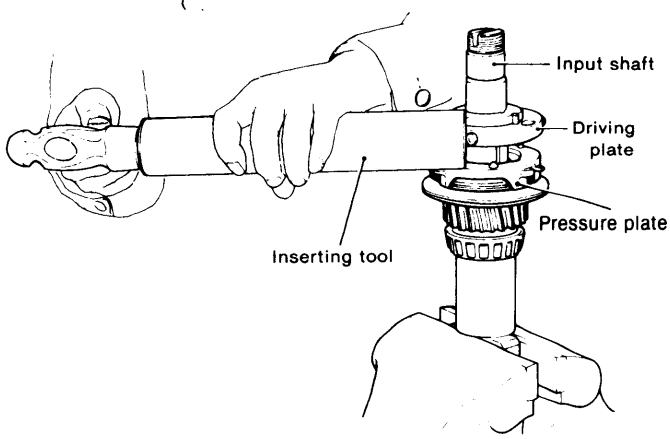

(17) Insert the adjusting plate and spacer.
(18) Press the bearing inner race, using an assembly tool.

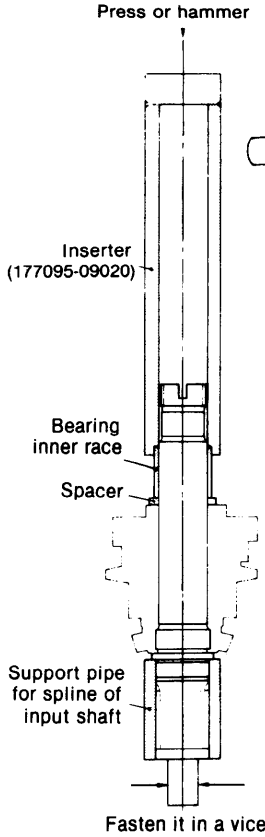

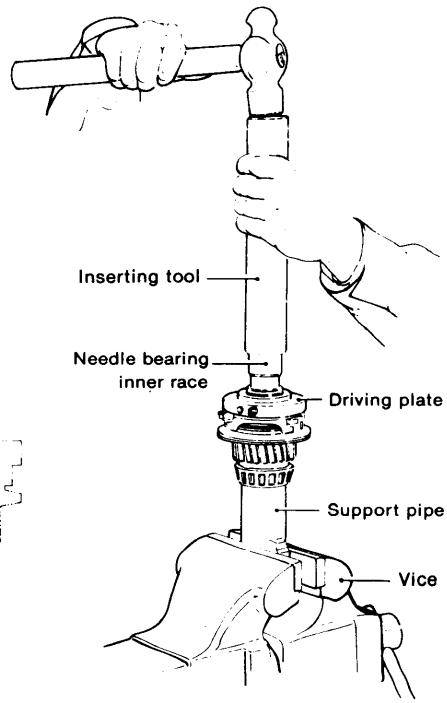

(19) Insert the knock pins and springs into the three holes around the circumference of the driving plate.
(20) Cover the driving plate with the shift ring so that the side with the identification groove faces the forward small gear side; install the ring so that the knock pins are pushed in.

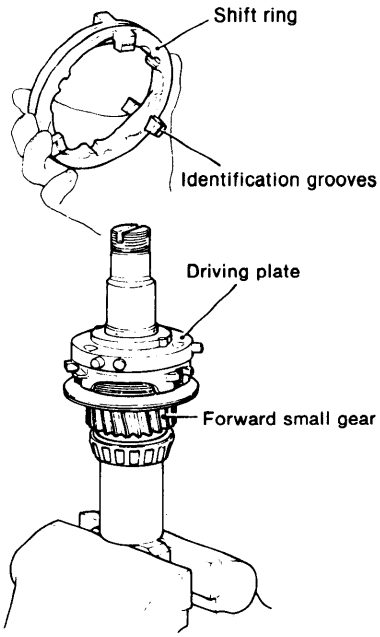

(21) Insert the three steel balls into the three grooves in the driving plate.
(22) Place the pressure plate onto the driving plate so that the steel balls fit into the three grooves of the pressure plate.
(23) Insert the three pressure plate return springs between the shift ring and the driving plate, and attach them to the small holes on the lugs of the pressure plate.
(24) Insert the reverse small gear [see step (6)] so that the three pawls of the steel plates enter the notches around the circumference of the pressure plate.
(25) Insert the needle bearing.
(26) Insert the thrust washer so that the sintered side (brown side) faces the gear side.
(27) Press the inner race of the bearing, using an assembly tool. At this time, make sure that the direction of the bearing is correct.

NOTE: The bearing inner race can be installed easily by preheating it to approximately 100°C.

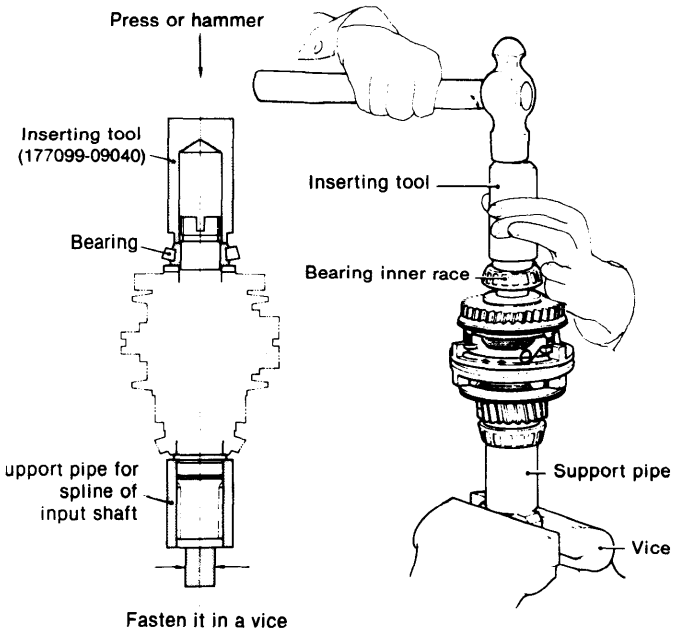

(28) Insert the spacer
(29) Tighten with a crown nut coated with a locking agent.
Tightening torque: 9.5kg-m (68.7ft-lb)

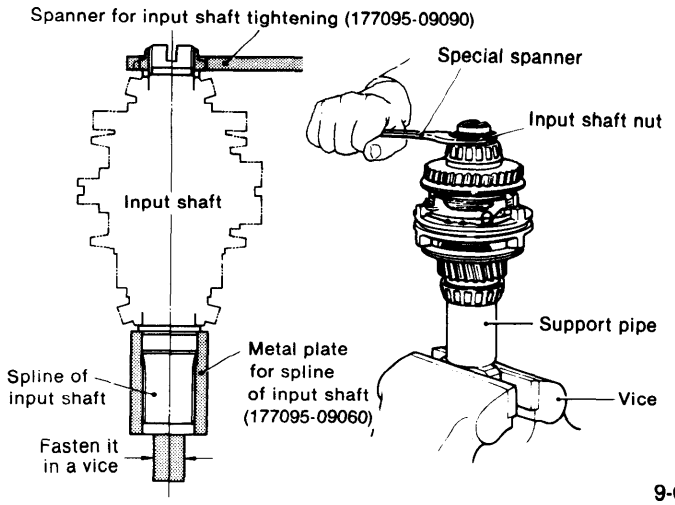

(30) With the shift ring in the reverse position, check the forward large gear to make sure it rotates smoothly. Next, with the shift ring in the forward position, check the reverse large gear to make sure it rotates smoothly.

6-3 Reassembling the output shaft

(1) Press the bearing onto the output shaft fitted with a large gear.
At this time, make sure that the direction of the bearing is correct.

NOTE: The bearing inner race can be easily installed by preheating it to approximately 100°C.

(2) Insert the O-ring.

6-4 Reassembling the intermediate shaft

(1) Press the inner race of the bearing onto the input shaft. At this time, make sure that the direction of the bearing is correct.

NOTE: The bearing inner race can be easily installed by preheating it to approximately 100°C.

6-5 Installing the shafts in the case

(1) Determining the thickness of the input shaft adjusting plate and output shaft adjusting plate

NOTE: As mentioned in section 5-1.(16), when none of the parts are replaced, the adjusting plate can be re-used without readjustment.

1) Measure length "B", "D", "F" between the cases of each shaft of the case body and mounting flange.
2) Cover each bearing with the bearing outer race, and measure length "A", "C", "E" between the bearings.

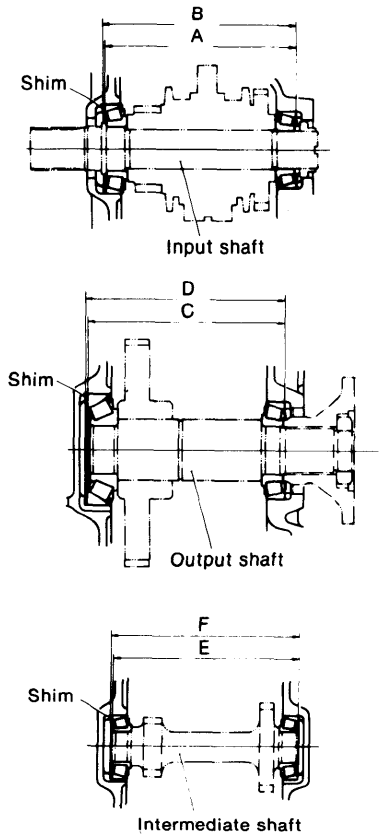

3) Adjust the input shaft adjusting plate thickness so that the clearance or tightening allowance is less than 0.05mm (0.0020in.).
4) Adjust the output shaft adjusting plate thickness so that the tightening allowance is within 0 ~ 0.1mm (0 ~ 0.0040in.).
5) Adjust the intermediate shaft adjusting plate thickness so that the clearance or tightening allowance is less than 0.05mm (0.0020in.).
6) Four adjusting plates of 1mm (0.0394in.), 0.5mm (0.0197in.), 0.3mm (0.0118in.) and 0.1mm (0.0040in.) are available.
Combine these plates to obtain the desired adjusting plate measurement.

(2) Insert the adjusting plate into the mounting flange, and press the outer race of the bearing.
Also, press the outer race of the bearing into the case.

NOTE: The outer race can be installed easily by heating the mounting flange and case to approximately 100°C, or by cooling the bearing outer race with liquid nitrogen, etc.

(3) Coat the circumference of the oil seal with a non-dry packing agent, and press it onto the mounting flange and case so that the spring part of the oil seal is inside the case.
(4) Coat the mating surfaces of the mounting flange and case with a non-dry packing agent.
Wipe off oil and dirt on the mating surface of the case and coat with a thin film of non-dry packing agent.

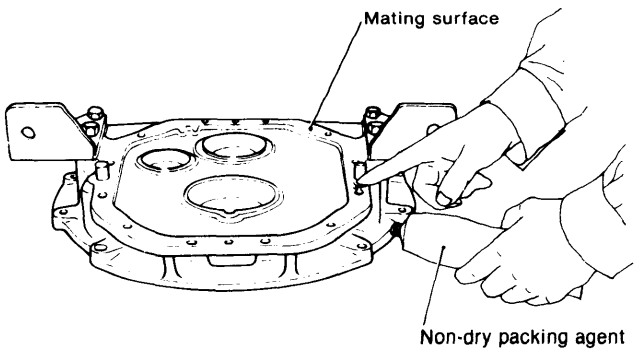

(5) Install the input, output and intermittent shafts into the case.
(6) Align the mounting flange with the case, and insert the parallel pin by tapping the mounting flange with a plastic hammer.
(7) Insert the super lock washer, and tighten the M10 bolt.

NOTE: Stainless steel bolts and plain washers are used on the bottom of the case in four locations. When reassembling, make sure they are reinstalled in the proper position.

6-6 Installing the lube oil pump

(1) Apply a coat of non-dry packing onto the surfaces of the case and the lube oil pump. Tighten the bolts.

NOTE: When installing the lube oil pump, the pump shaft must be installed into the groove on the end of the input shaft.

(2) When the packing is broken, replace.
(3) Insert the lube oil pump body into the collar. Tighten.
(4) Install the strainer and packing.
(5) Install the drain plug and packing.

6-7 Reassembling and installing the operating system

(1) Insert the shift fork into the case from above; insert the shift bar.

NOTE: Insert the shift bar with the threaded end towards the outside (lube oil pump side).

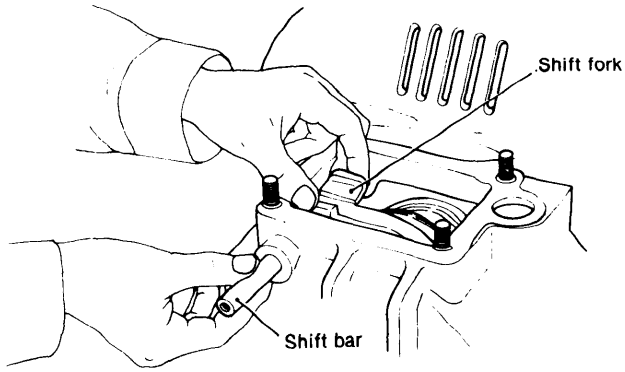

(2) Coat the threaded part of the shift bar plug with a non-dry packing agent, and secure it to the case with a hexagonal bar spanner (width across flats: 8mm (0.3150in).

NOTE: Put the shift fork into neutral before installing.

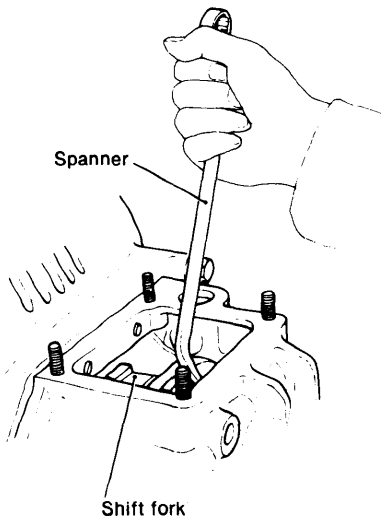

(3) Coat the outer surface of the oil seal with a non-dry packing agent, and press the seal onto the case cover.
(4) Insert the spring into the shift cam.
(5) Insert the knock pin into the shift cam from the front end, and lock with the circlip.
(6) Insert the assembled shift cam into the case cover.

(7) Fit the shift lever to the shift cam, and tighten the M8 bolt.

NOTE: The shift cam must rotate smoothly.

(8) Replace the packing if it is damaged.

(9) Attach the case upper cover together with the operating system to the case body.
At this time, make sure that the shift cam is fitted to the shift fork, and that the shift lever is in neutral.

NOTE: Put the shift fork into neutral before installing.

(10) Insert the super lock washer, and tighten the M10 nut.

(11) Shift the shift lever to forward and reverse to make sure that the lever operates normally.
If the lever does not operate normally, loosen the M10 nut, slide the case upper cover forward, backward, and to the left and right, then re-tighten with the M10 nut in the position at which the lever operates normally.

NOTE: If the lever operates normally a click will be heard when it is put into forward and reverse.

(12) Install the dipstick and packing.

6-8 Installing the output shaft coupling

(1) Install the output shaft coupling on the output shaft.

(2) Tighten and caulk the output shaft lock nut, using the assembly tool.
Tightening torque.....100kg-m (723.3ft-lb)

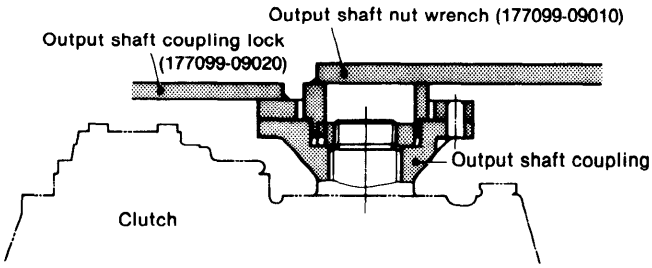

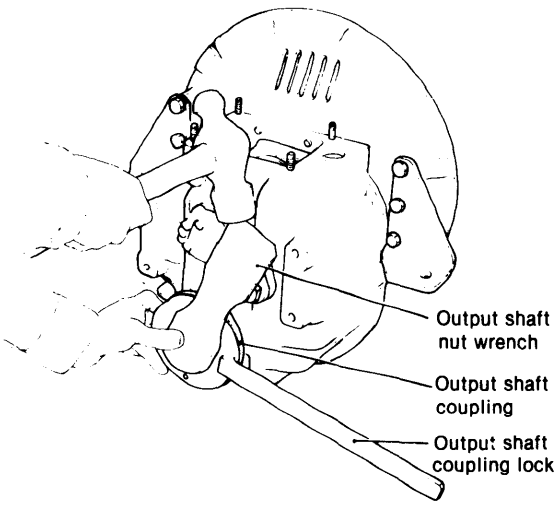

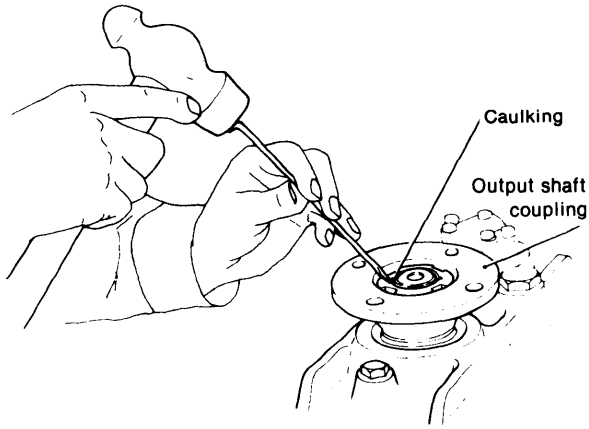

(3) Shift the shift lever to the neutral position and make sure the clutch engages when the shift lever is put into forward and reverse.
The input/output shafts will not rotate smoothly if the side gap of the bearing is too small in relation to the thickness of the adjusting plate.

CHAPTER 10

REMOTE CONTROL SYSTEM

1. Construction 10-1
2. Clutch and Speed Regulator Remote Control 10-3
3. Decompression Remote Control 10-7
4. Engine Stop Remote Control 10-8

1. Construction

This engine is designed primarily for remote control operation.
A remote control cable bracket is installed as standard.
Morse two-handle MS type is installed for model 2QM20, 3QM30.
Morse one-handle MT2 type is installed for model 2QM20H and 3QM30H. Decompression remote control device may be installed for every model.

1-1 MS type (for 2QM20, 3QM30 models)

This figure shows how 2QM20 model and 3QM30 model differ only at the clutch remote control cable connection and bracket. Otherwise, it is the same as the 2QM20 model.

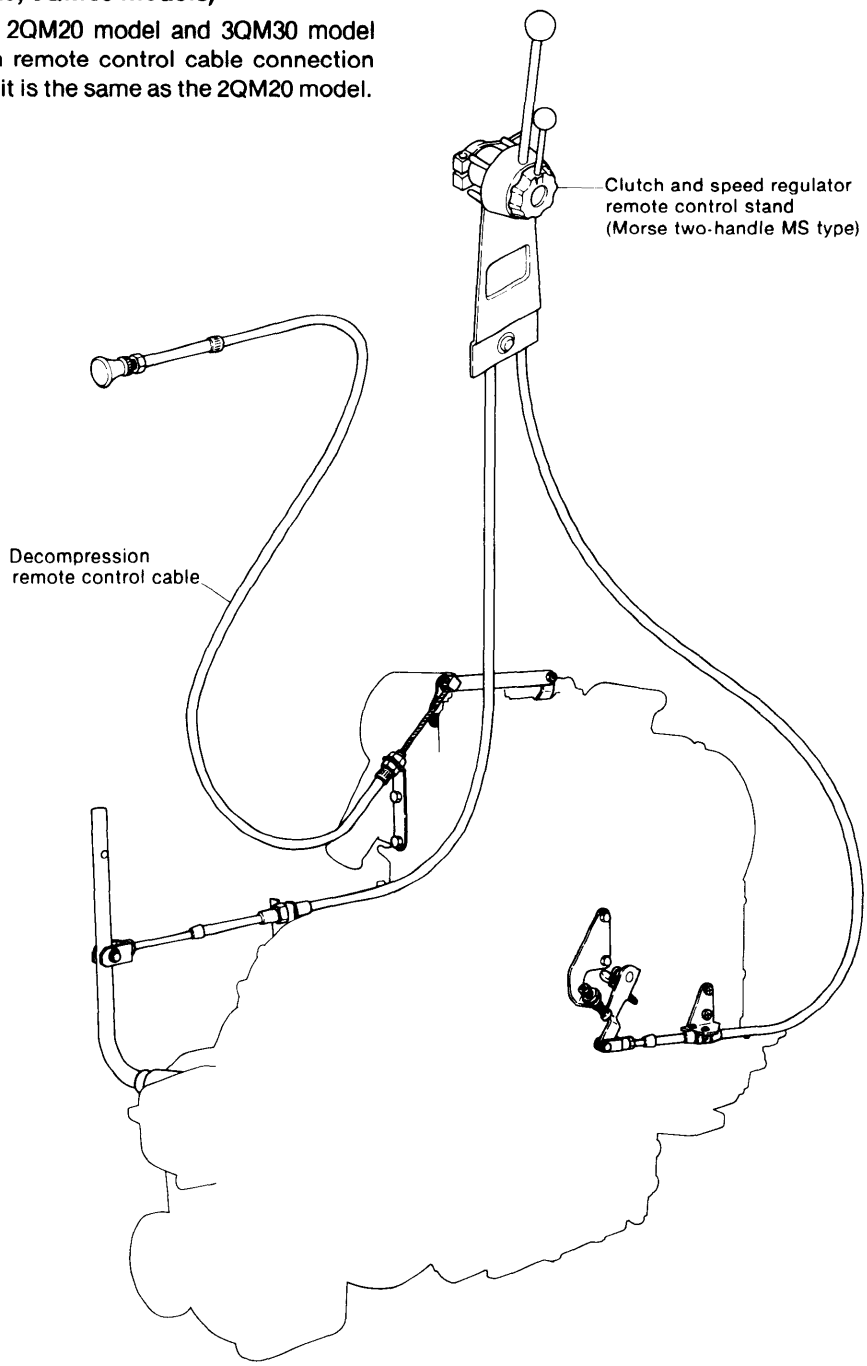

1-2 MT2 type (for 2QM20H, 3QM30H models)

The figure shows 2QM20H model. 3QM30H model differs only at the remote control cable connection for clutch side.

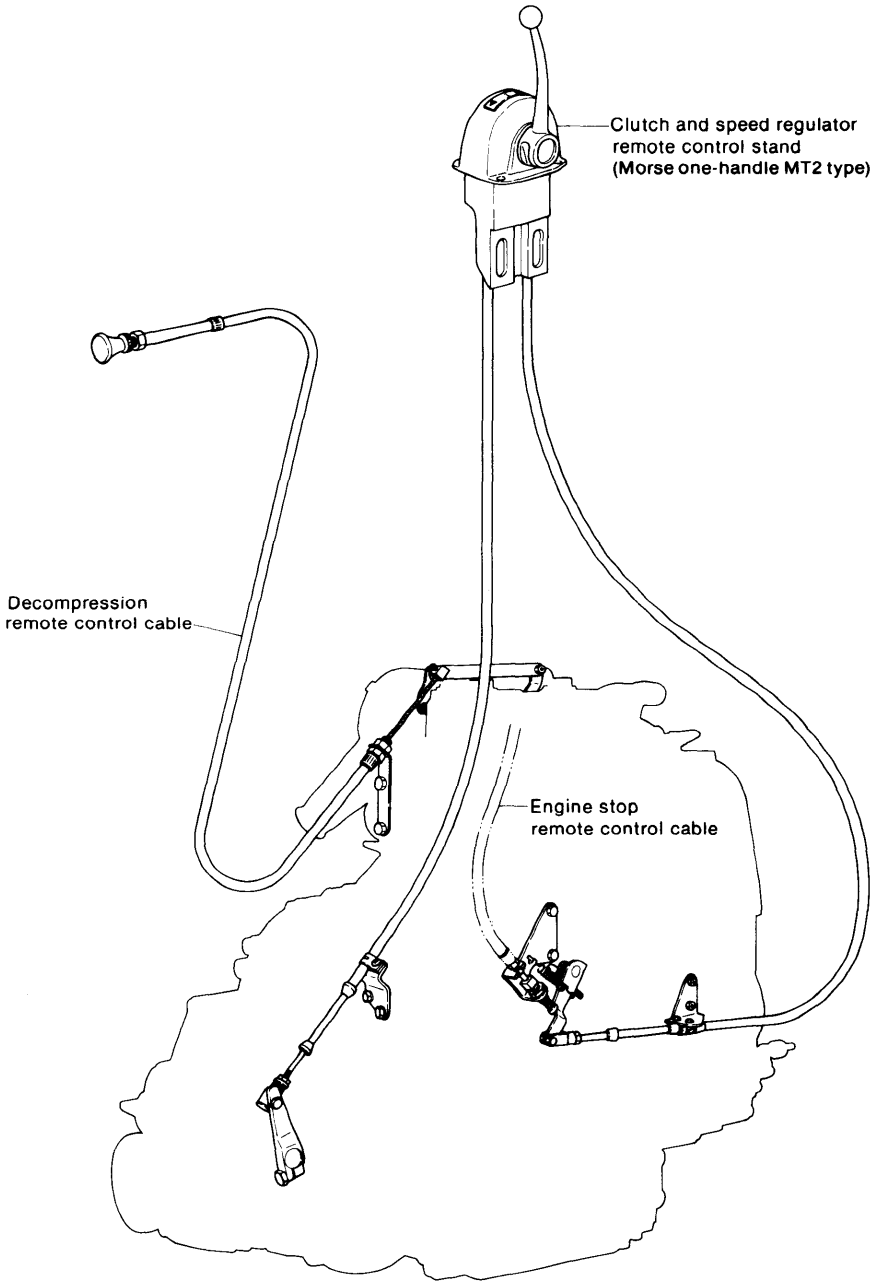

2. Clutch And Speed Regulator Remote Control

2-1 Construction

2-1.1 MS type (for 2QM20, 3QM30 models)

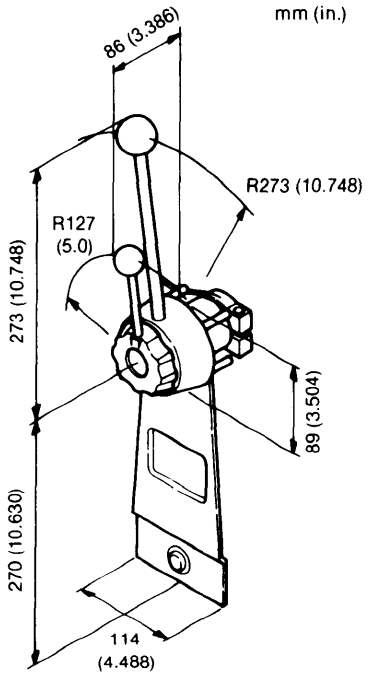

2-1.2 MT2 type (for 2QM20H, 3QM30H models)

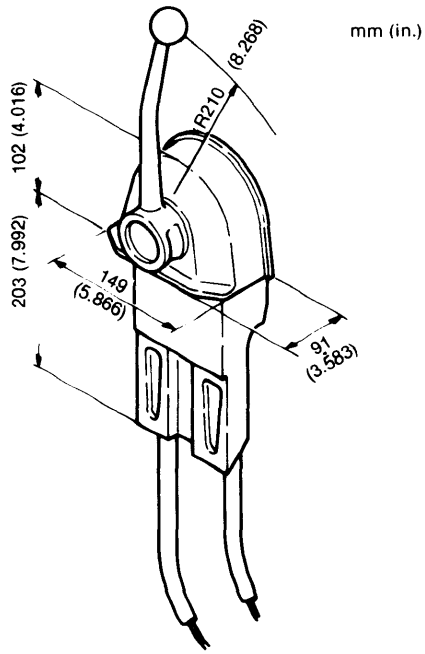

2-2 Remote control composition

		2QM20 (Y)	3QM30 (Y)	2QM20H (F)	3QM30H (F)
Type of Control Stand		Morse Two-handle MS type		Morse One-handle MT2 type	
Speed Control	Cable Clamp Clevis	Morse No. 33-C Morse No. A31804 Morse No. A31800			
Clutch Control	Cable Clamp Clevis Ball joint	Morse No. 64BC — — —	 A029132-001 	Morse No. 33-C Morse No. A31804 — Morse No. A31126	
Decompression Control	Cable Bracket	Yanmar No. 104214-03700 Attached for all models			

2-2.1 Control Cable

(1) Morse Type "33-C" push-pull control cables, P/N D032377003 (to length).

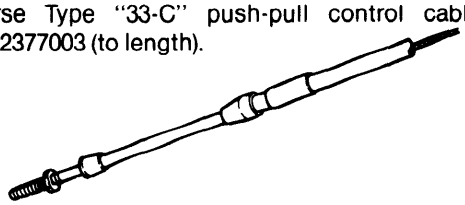

Use only Super-Responsive Morse Control Cables. They are designed specifically for use with Morse control heads. This engineered system of Morse cables, control head and engine connection kits ensures dependable, smooth operation with an absolute minimum of backlash. The thread size on cable ends is 10-32. Travel is up to 3". The core is a solid wire, with a 3/32" diameter.

(2) Morse type "64BC" control cable for clutch control in 2QM20, 3QM30 models.

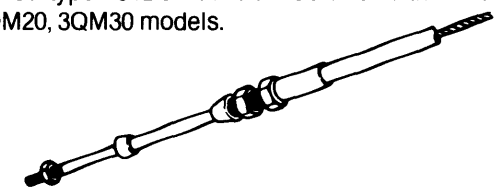

Designed for extra heavy duty, especially for use with the "MJ", "MC" and "MS" controls for manual gears. Thread size on cable end is 5/16-24. Travel up to 4". Core is armored, flexible strand, 3/16" diameter, with a bulkhead type fitting on one end and a clamp type on the other end.

2-2.2 Ball joints

Quick-release

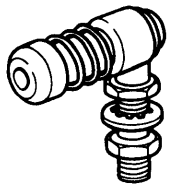

A31126-Quick-release type, the stud is 9/16" long with 1/4" 28 UNF threads. 15/16 from center of stud to end of barrel. Complete with nut and lock washer.

2-2.3 Clamps and fasteners

A31804: Clamp A31509 and Shim A31538.

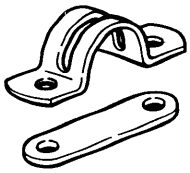

A31509-Cable clamp 7/32" diameter holes on 1" centers. A31538-Shim, for use with clamp A31509. 7/32" diameter holes on 1" centers.

2-2.4 CLEVIS

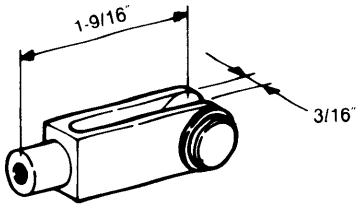

A031800—Fits 3/16" thick lever with 3/16" diameter hole. Length from center of pin to barrel end is 1-9/16".

2-3 Engine side installation

2-3.1 Action of the clutch lever on the engine side

(1) For 2QM20 model

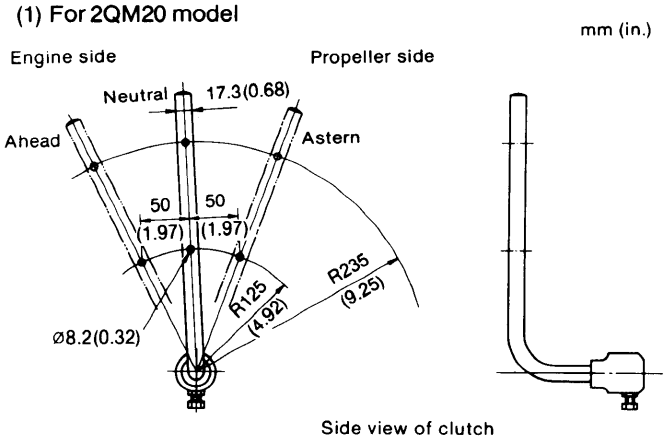

(2) For 3QM30 model

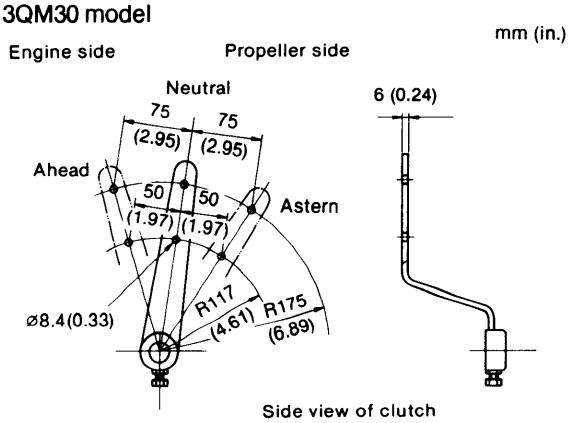

(3) For 2QM20H model

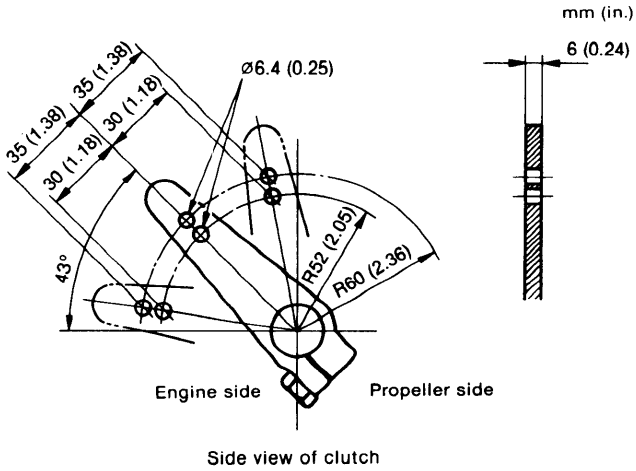

(4) For 3QM30H model

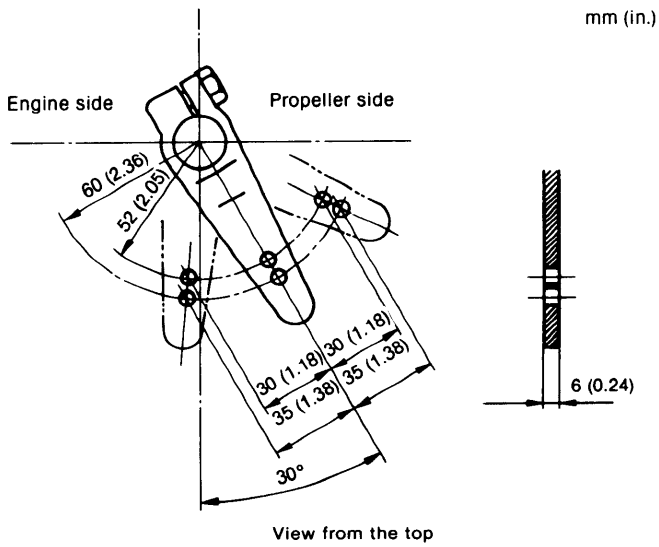

2-3.2 Clutch cable connection

(1) Standard clutch cable (control from bow side)

1) For 2QM20 Model

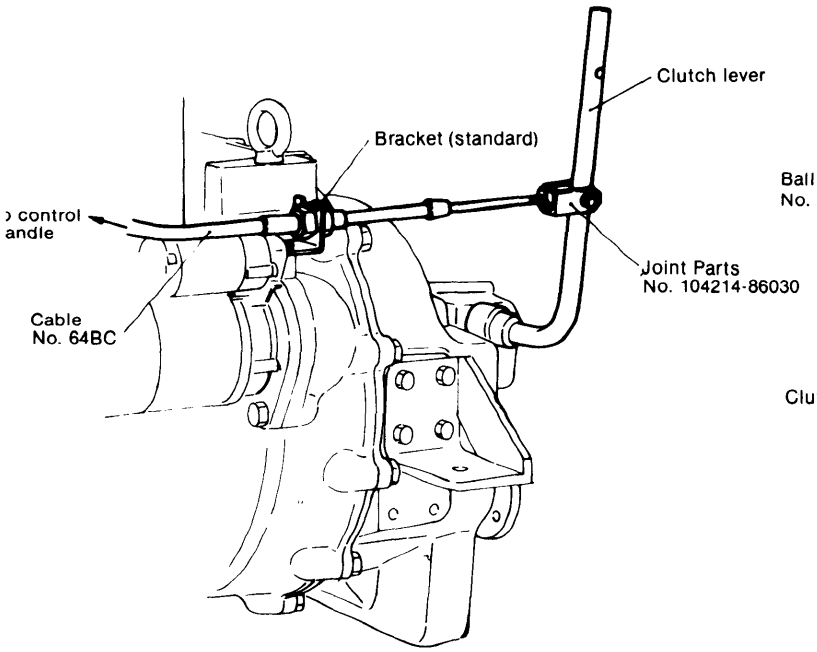

3) For 2QM20H Model

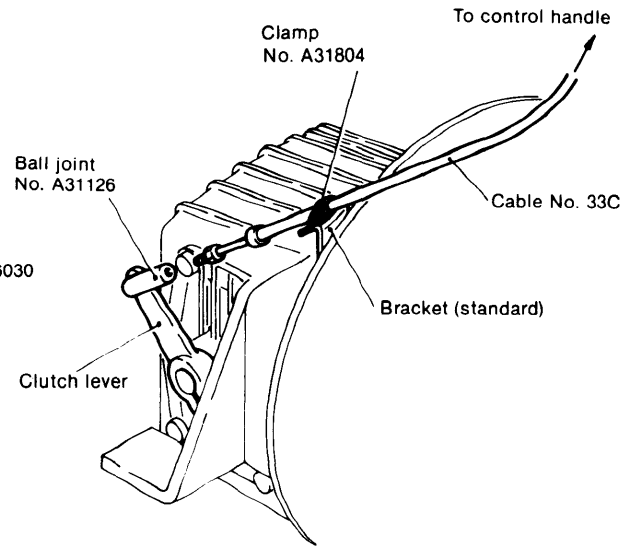

2) For 3QM30 Model

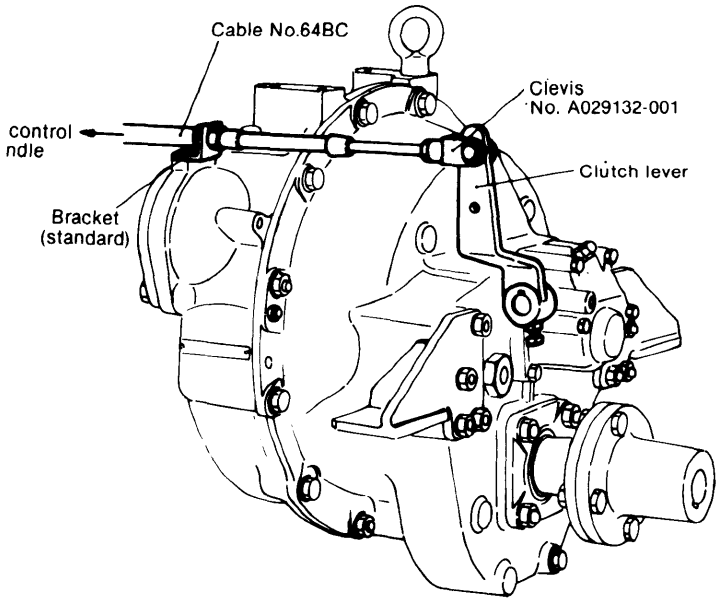

4) For 3QM30H Model

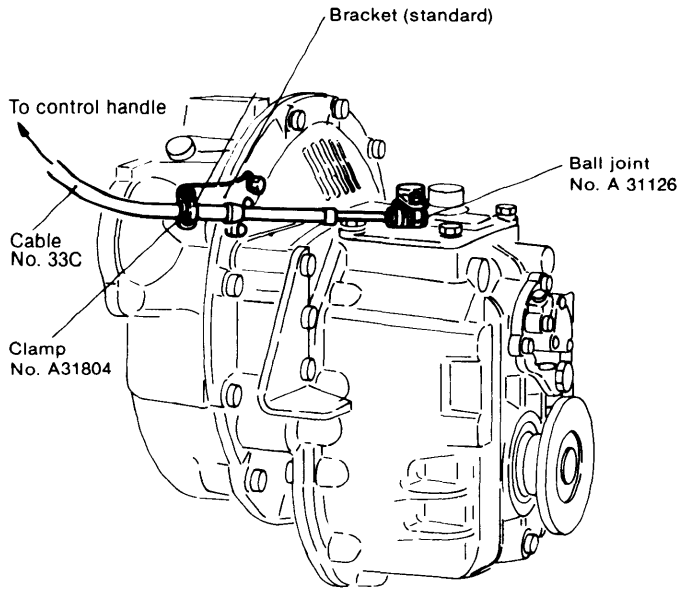

(2) Option (control from stern side) for 2QM20H model only

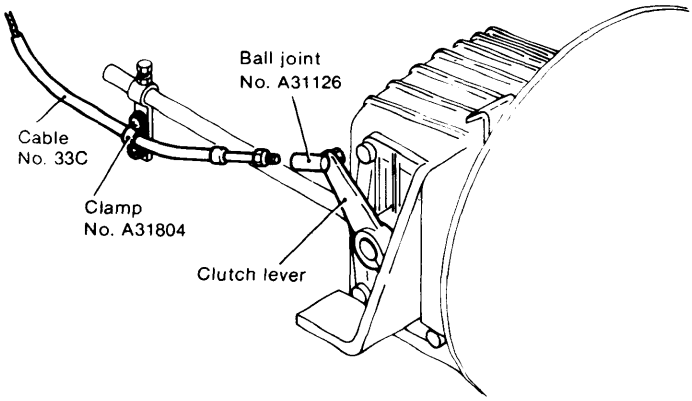

2-3.3 Action of the speed regulator lever on the engine side

(1) For 2QM20, 3QM30 models
(without engine stop device)

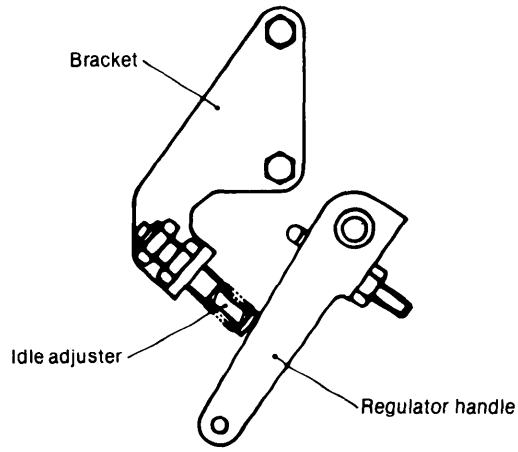

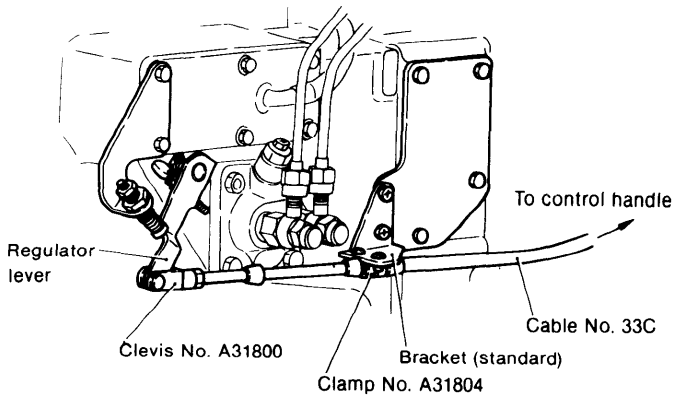

(2) For 2QM20H, 3QM30H models
(with engine stop device)

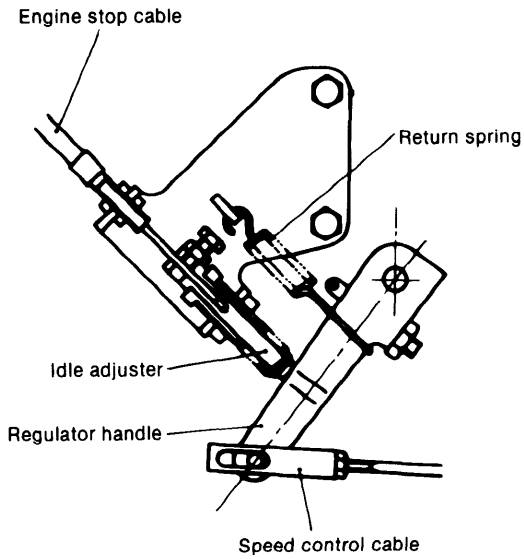

3. Decompression Remote Control

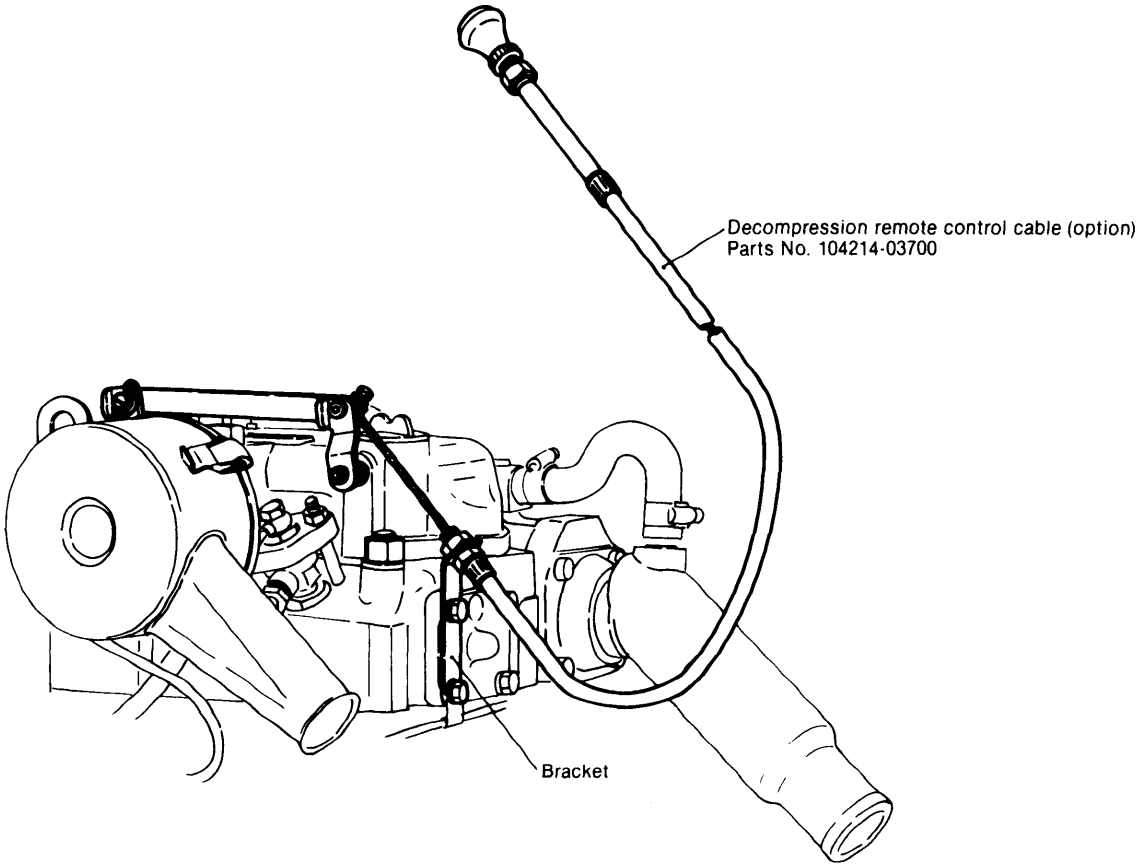

4. Engine Stop Remote Control

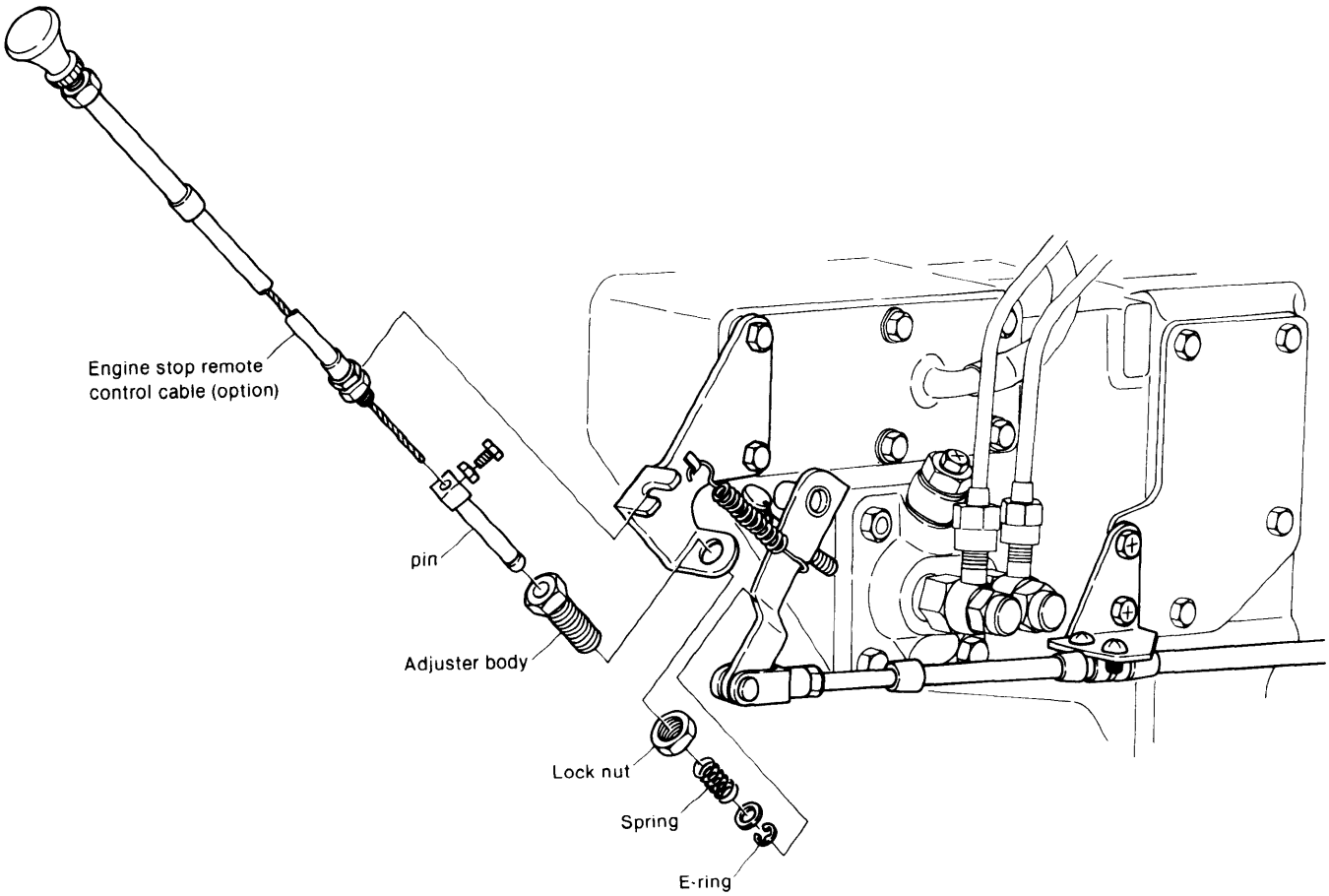

CHAPTER 11

ELECTRICAL SYSTEM

1. Composition 11-1
2. Battery 11-3
3. Starter Motor 11-6
4. Alternator 11-17
5. Alarm Circuit 11-27

1. Composition

1-1. Composition

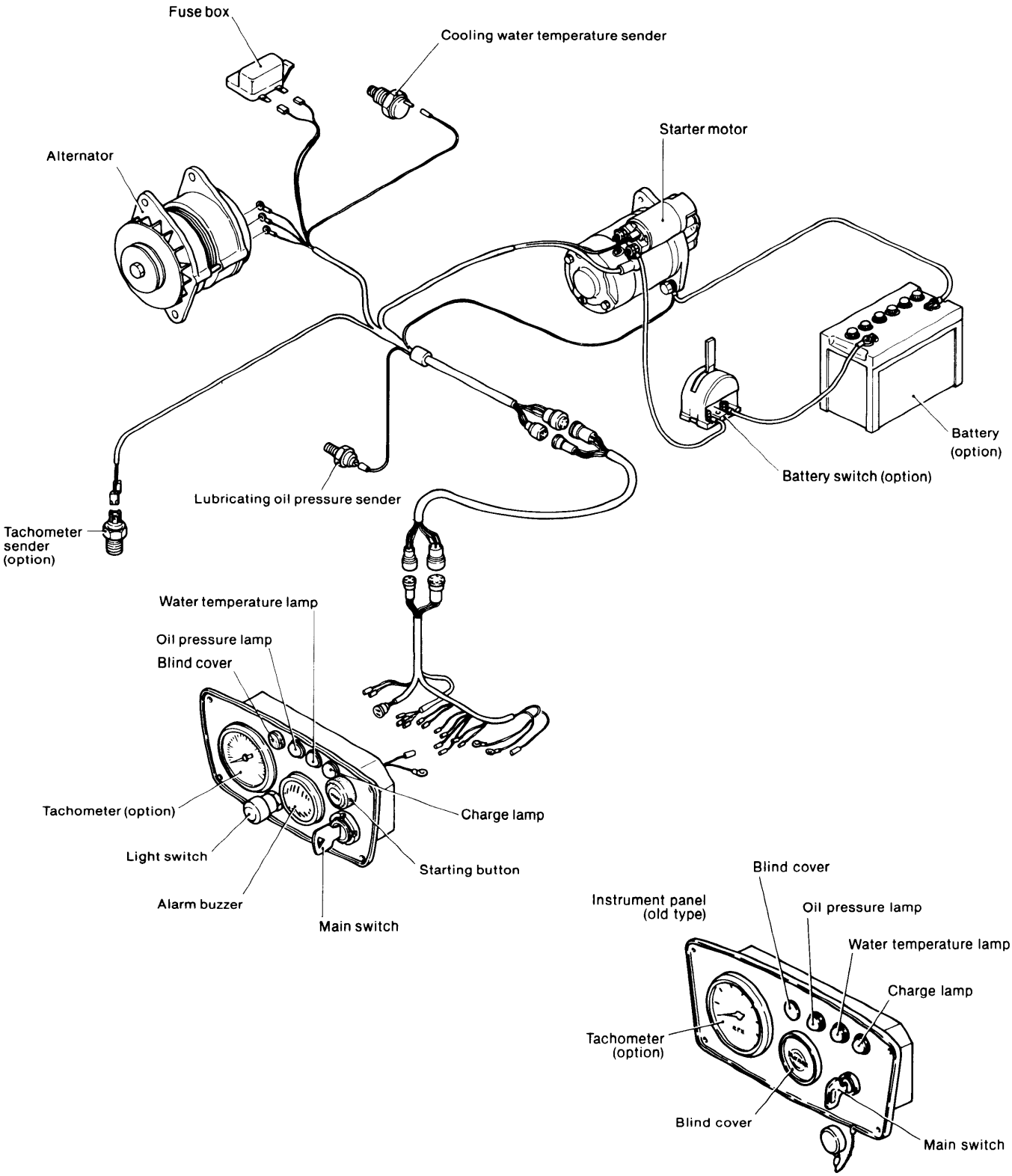

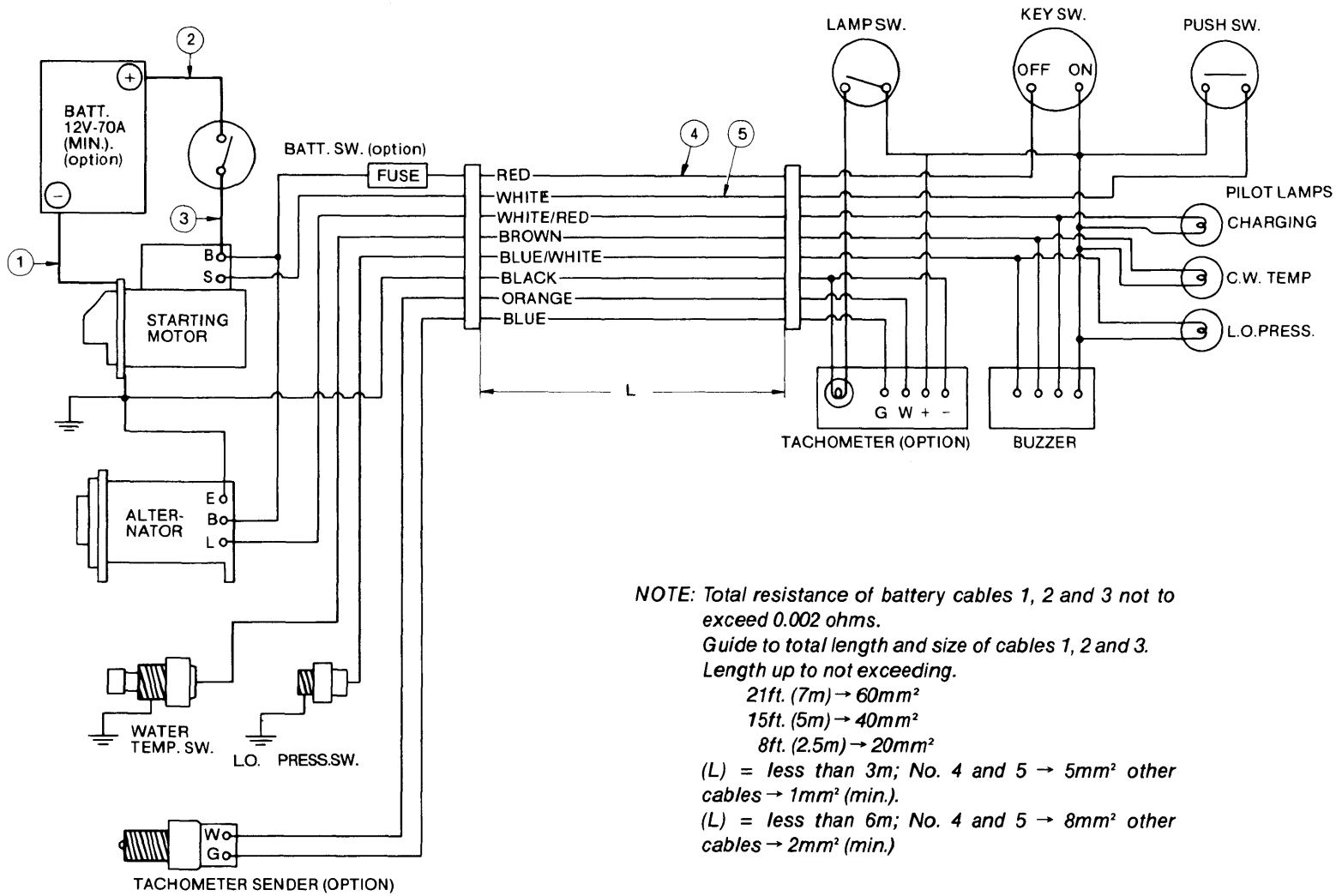

NOTE: Total resistance of battery cables 1, 2 and 3 not to exceed 0.002 ohms.
Guide to total length and size of cables 1, 2 and 3.
Length up to not exceeding.
21ft. (7m) → 60mm²
15ft. (5m) → 40mm²
8ft. (2.5m) → 20mm²
(L) = less than 3m; No. 4 and 5 → 5mm² other cables → 1mm² (min.).
(L) = less than 6m; No. 4 and 5 → 8mm² other cables → 2mm² (min.)

2. Battery

2-1 Construction

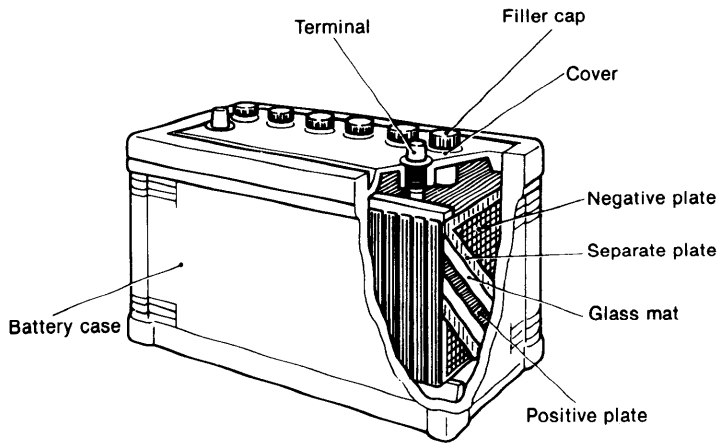

The battery utilizes chemical action to convert chemical energy to electrical energy. This engine uses a lead acid battery which stores a fixed amount of power that can be used when required. After use, the battery can be recharged and used again.
As shown in the figure, a nonconductive container is filled with dilute sulfuric acid electrolyte. Lead dioxide positive plates and lead dioxide negative plates separated by glass mats are stacked alternately in the electrolyte. The positive and negative plates are connected to their respective terminals.
Power is removed from the battery by connecting the load across these two terminals.
When the battery is discharging, an electric current flows from the positive plates to the negative plates. When the battery is being charged, electric current is passed through the battery in the opposite direction by an external power source.

2-2 Battery capacity and battery cables

2-2.1 Battery capacity

Since the battery has a minimum capacity of 12V, 70AH, it can be used for 100 ~ 150AH.

	2QM20 (H)	3QM30 (H)
Minimum battery capacity	12V 70AH	12V 100AH
Fully charged specific gravity	1.280	1.280

2-2.2 Battery cable

Wiring must be performed with the specified electric wire. Thick, short wiring should be used to connect the battery to the starter, (soft automotive low-voltage wire [AV wire]).
Using wire other than that specified may cause the following troubles:

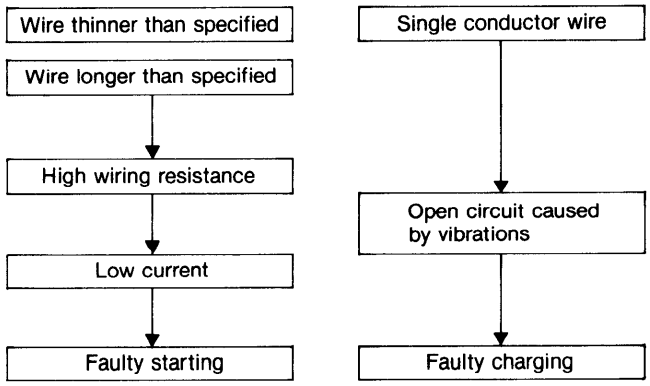

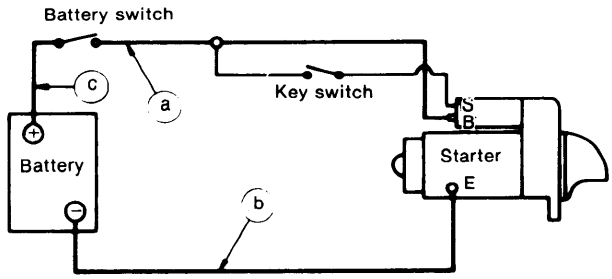

The overall lengths of the wiring between the battery (+) terminal and the starter (B) terminal, and between the battery (−) terminal and the starter (E) terminal should be based on the following table.

Voltage system	Allowable wiring voltage drop	Conductor cross-section area	a + b + c allowable length
12V	0.2V or less/100A	20mm² (0.0311 in.²)	Up to 2.5m (98.43 in.)
		40mm² (0.062 in.²)	Up to 5m (196.87 in.)

NOTE: Excessive resistance in the key switch circuit (between battery and start (S) terminals) can cause improper pinion engagement. To prevent this, follow the wiring diagram exactly.

2-3 Inspection

The quality of the battery governs the starting performance of the engine. Therefore the battery must be routinely inspected to assure that it functions perfectly at all times.

2-3.1 Visual inspection

(1) Inspect the case for cracks, damage and electrolyte leakage.
(2) Inspect the battery holder for tightness, corrosion, and damage.
(3) Inspect the terminals for rusting and corrosion, and check the cables for damage.
(4) Inspect the caps for cracking, electrolyte leakage and clogged vent holes.
Correct any abnormal conditions found. Clean off rusted terminals with a wire brush before reconnecting the battery cable.

2-3.2 Checking the electrolyte

(1) Electrolyte level

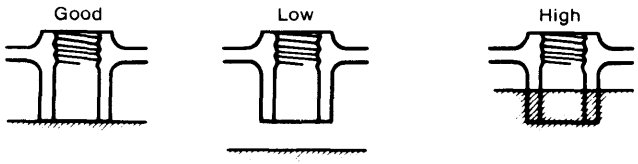

Check the electrolyte level every 7 to 10 days. The electrolyte must always be 10 ∿ 20mm over the tops of the plates.

NOTES: 1) The "LEVEL" line on a transparent plastic battery case indicates the height of the electrolyte.
2) Always use distilled water to bring up the electrolyte level.
3) When the electrolyte has leaked out, add dilute sulfuric acid with the same specific gravity as the electrolyte.

(2) Measuring the specific gravity of the electrolyte

1) Draw some of the electrolyte up into a hydrometer.

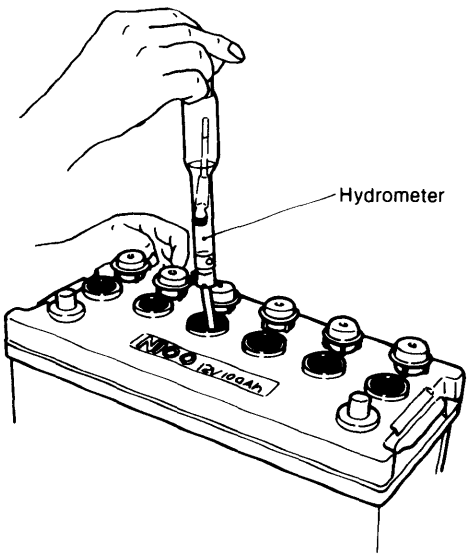

2) Take the specific gravity reading at the top of the scale of the hydrometer.

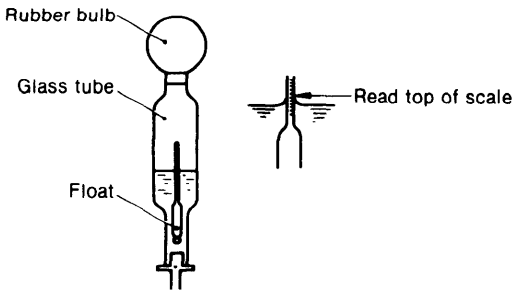

3) The battery is fully charged if the specific gravity is 1.260 at an electrolyte temperature of 20°C. The battery is discharged if the specific gravity is 1.200 (50%). If the specific gravity is below 1.200, recharge the battery.

4) If the difference in the specific gravity among the cells of the battery is ±0.01, the battery is OK.

5) Measure the temperature of the electrolyte.
Since the specific gravity changes with the temperature, 20°C is used as the reference temperature.
Reading the specific gravity at 20°C
$S_{20} = St + 0.0007 (t - 20)$
S_{20}: Specific gravity at the standard temperature of 20°C
St: Specific gravity of the electrolyte at t°C
0.0007: Specific gravity change per 1°C
t: Temperature of electrolyte

2-3.3 Voltage test

Using a battery tester, the amount of discharge can be determined by measuring the voltage drop which occurs while the battery is being discharged with a large current.

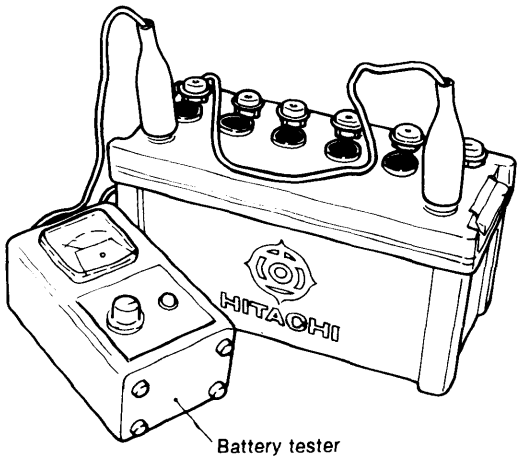

(1) Connect the tester to the battery.
12V battery tester
Adjust the current (A).

(2) Connect the (+) lead of the tester to the (+) battery terminal, and the (−) tester lead to the (−) battery terminal.

(3) Push the TEST button, wait 5 seconds, and then read the meter.
• Repeat the test twice to make sure that the meter indication remains the same.

2-3.4 Washing the battery

(1) Wash the outside of the battery with a brush while running cold or warm water over the battery. (Make sure that no water gets into the battery.)

(2) When the terminals or other metal parts are corroded due to exposure to electrolyte leakage, wash off all the acid.

(3) Check the vent holes of the caps and clean if clogged.

(4) After washing the battery, dry it with compressed air, connect the battery cable, and coat the terminals with grease. Since the grease acts as an insulator, do not coat the terminals before connecting the cables.

2-4 Charging

2-4.1 Charging methods

There are two methods of charging a battery: normal and rapid.

Rapid charging should only be used in emergencies.

- Normal charging...Should be conducted at a current of 1/10 or less of the indicated battery capacity (10A or less for a 100AH battery).
- Rapid charging...Rapid charging is done over a short period of time at a current of 1/5 ~ 1/2 the indicated battery capacity (20A ~ 50A for a 100AH battery). However, since rapid charging causes the electrolyte temperature to rise too high, special care must be exercised.

2-4.2 Charging procedure

(1) Check the specific gravity and adjust the electrolyte level.
(2) Disconnect the battery cables.
(3) Connect the red clip of the charger to the (+) battery terminal and connect the black clip to the (−) terminal.

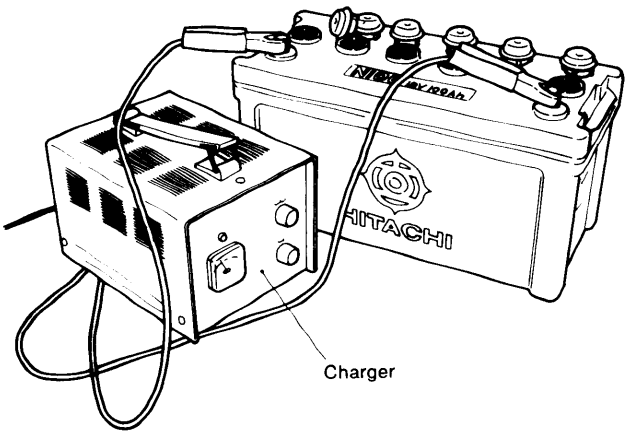

(4) Set the current to 1/10 ~ 1/5 of the capacity indicated on the outside of the battery.
(5) Periodically measure the specific gravity during charging to make sure that the specific gravity remains at a high fixed value. Also check whether gas is being generated.

2-4.3 Charging precautions

(1) Remove the battery caps to vent the gas during charging.
(2) While charging, ventilate the room and prohibit smoking, welding, etc.
(3) The electrolyte temperature should not exceed 45°C during charging.
(4) Since an alternator is used on this engine, when charging with a charger, always disconnect the battery (+) cable to prevent destruction of the diodes.
(Before disconnecting the (+) battery cable, disconnect the (−) battery cable [ground side].)

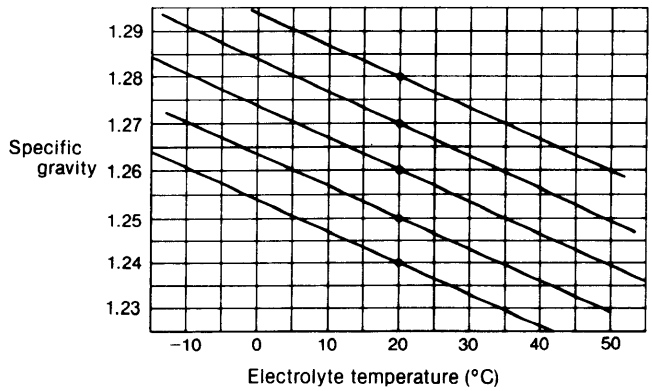

Electrolyte temperature and specific gravity

2-5 Battery storage precautions

The life of a battery depends considerably on how it is handled. Generally speaking, however, after about two years its performance will deteriorate, starting will become difficult, and the battery will not fully recover its original charge even after recharging. Then it must be replaced.

(1) Since the battery will self-discharge about 0.5%/day even when not in use, it must be charged 1 or 2 times a month when it is being stored.

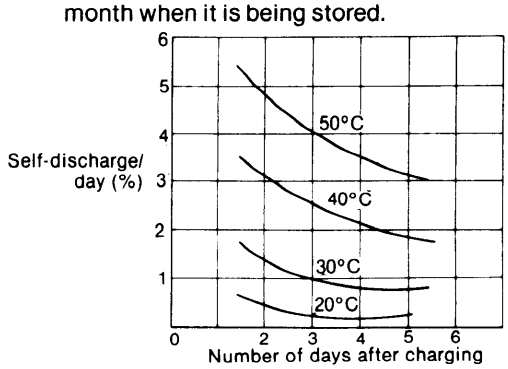

(2) If charging by the engine alternator is insufficient because of frequent starts and stops, the battery will rapidly lose power.
Charge the battery as soon as possible after it is used under these conditions.
(3) An easy-to-use battery charger that permits home charging is available from Yanmar. Take proper care of the battery by using the charger as a set with a hydrometer.
When the specific gravity has dropped to about 1.16 and the engine will not start, charge the battery up to a specific gravity of 1.26 (24 hours).
(4) Before putting the battery in storage for long periods, charge it for about 8 hours to prevent rapid aging.

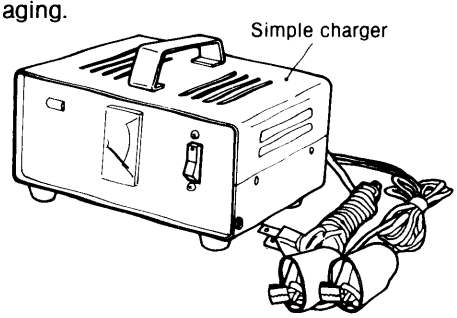

3. Starter Motor

The starter motor is installed on the flywheel housing. When the starting button is pushed, the starter motor pinion flies out and engages the ring gear of the flywheel. Then the main contact is closed, current flows, and the engine is started.
After the engine starts, the pinion automatically returns to its initial position when the starting button is released. Once the engine starts, the starting button should be released immediately. Otherwise, the starter motor may be damaged or burned out.

3-1 Specifications and Performance.

Engine model		2QM20(H)	3QM30(H)
Model		S114-206	S12-47
Rating (sec)		30	30
Output (kw)		1.3	1.8
Clutch system		Overrunning	Overrunning
Engagement system		Magnetic shift	Magnetic shift
Pinion flyout voltage (V)		8 or less	8 or less
No-load	Terminal voltage (V)	12	12
	Current (A)	60 or less	55 or less
	Speed (rpm)	6000 or greater	6000 or greater

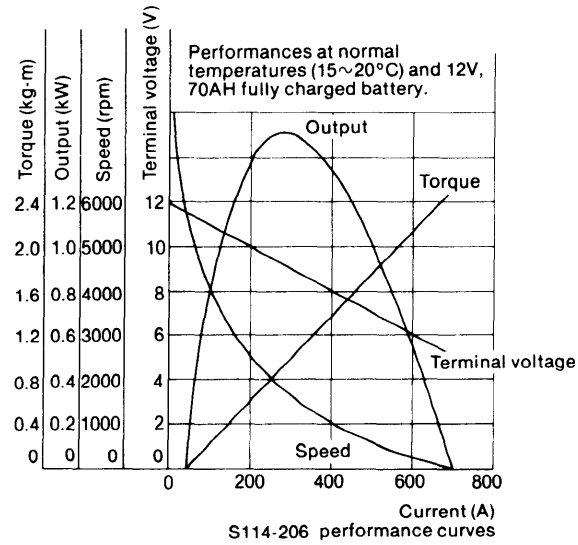

S114-206 performance curves

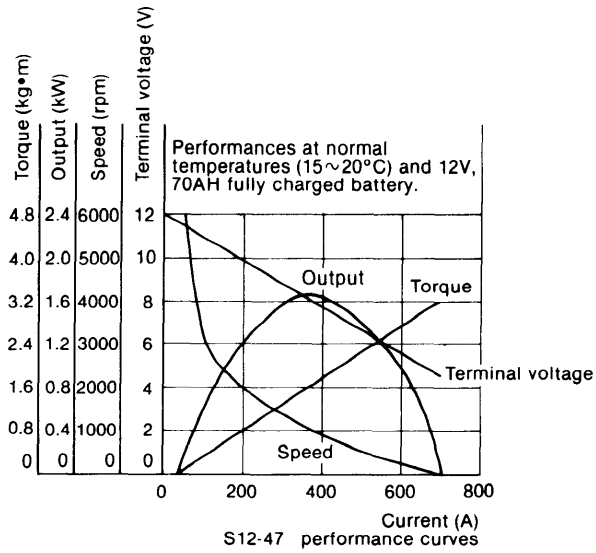

S12-47 performance curves

3-2 Construction

This starter motor described in this section is a conventional pre-engaged 4-brush 4-pole starter motor with a screw roller drive clutch.
The starter motor is composed of three major parts, as follows:

(1) Magnetic switch
Moves plunger to engage and disengage pinion, and through the engagement lever, opens and closes main contact (moving contact) to stop the starter motor.

(2) Motor
A continuous current series motor which generates rotational drive power.

(3) Pinion
Transfers driving power from motor to ring gear. An overspeed clutch is employed to prevent damage if the engine should run too fast.

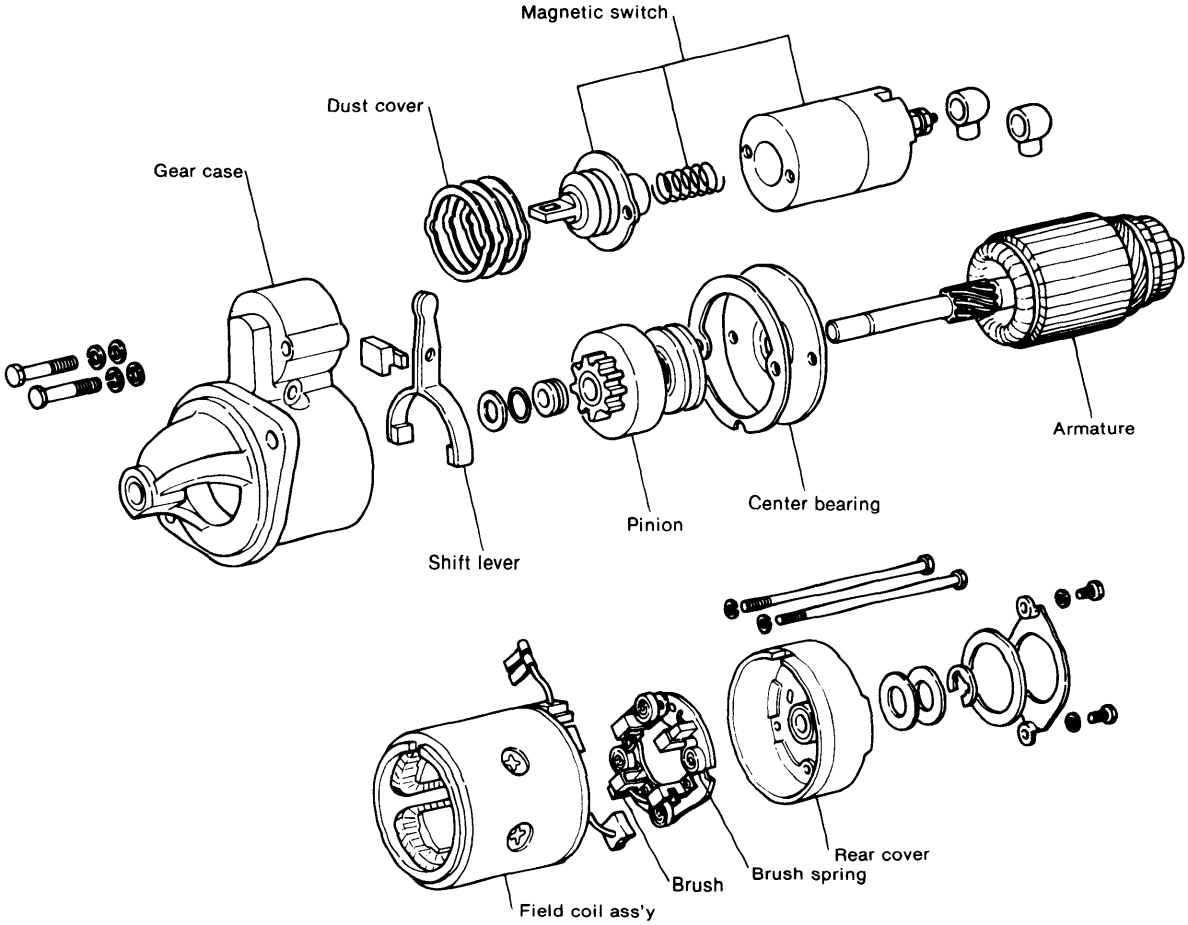

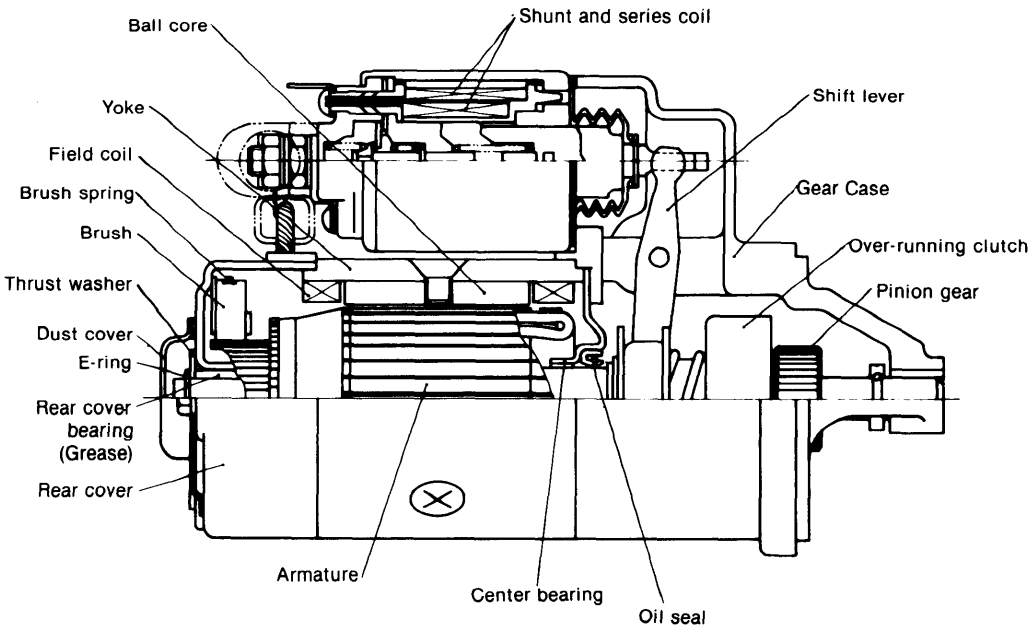

1 Magnetic switch assembly
2 Torsion spring
3 Shift lever
4 Gear case cover
5 Pinion assembly
6 Pinion stopper clip
7 Gear case metal
8 Pinion stopper
9 Field coil assembly
10 Brush
11 Thrust washer
12 Dust cover
13 Rear cover metal
14 Rear cover assembly
15 Armature assembly
16 Yoke assembly

To prevent the motor receiving a shock which will occur as the engine starts and over-runs, this starter motor is installed with an over-running clutch.

Over-running clutch

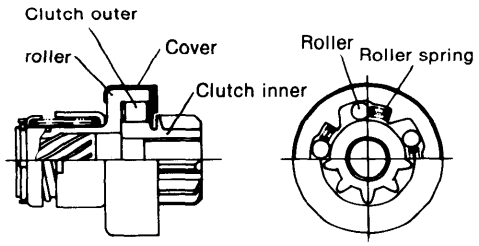

3-3 Operation

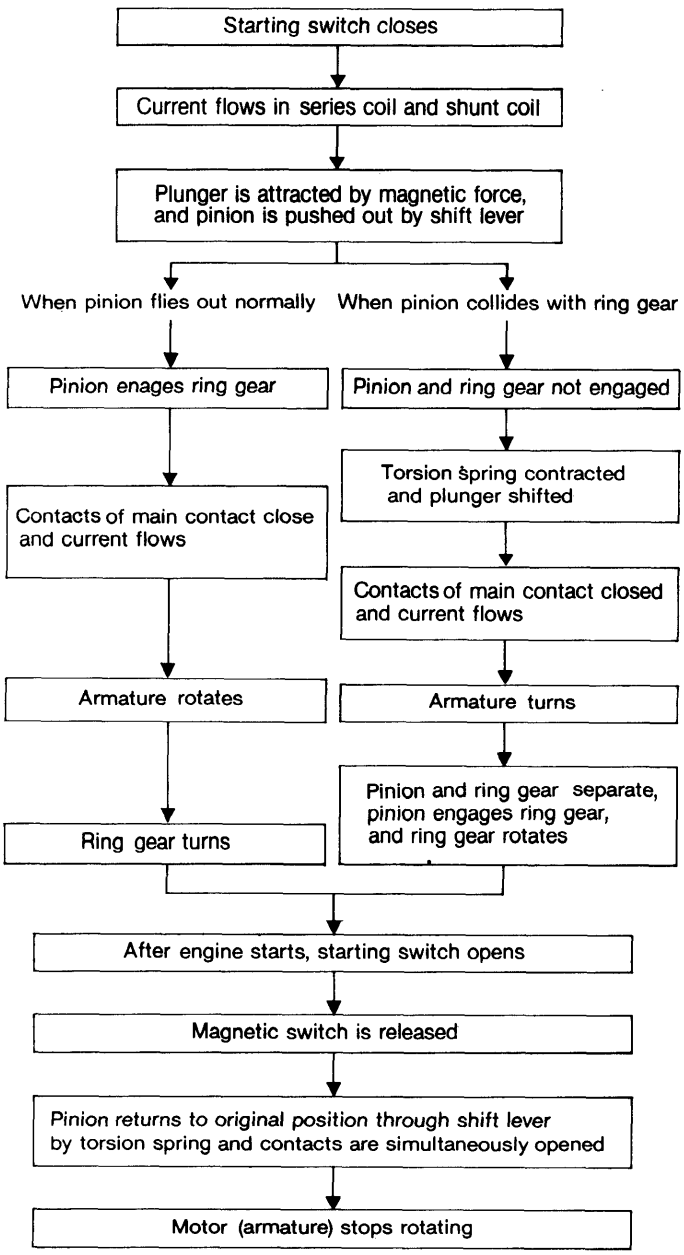

3-4 Adjustment and performance test

3-4.1 L-size measurement (gap between pinion and pinion stopper)

When the pinion is at the projected position, measure between pinion and pinion stopper. This check should be made with the pinion pressed back lightly to take up any play in the engagement linkage.

mm

	Starter motor	*l* dimension
2QM20	S114-206	0.3 ~ 2.5
3QM30	S12-47	0.2 ~ 1.5

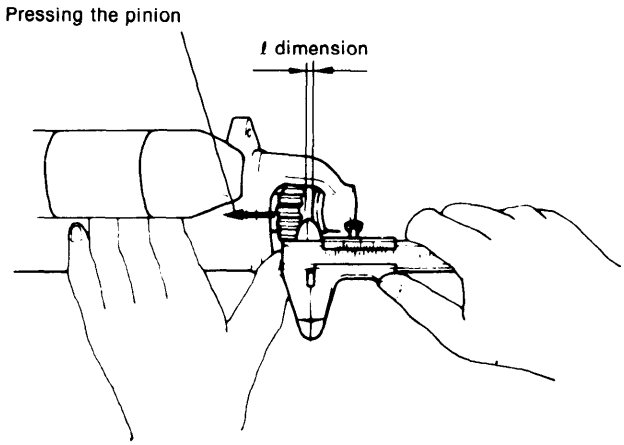

Measuring of *l* dimension

3-4.2 Pinion movement

After complete assembly of the starter motor, connect up the motor as in Fig.

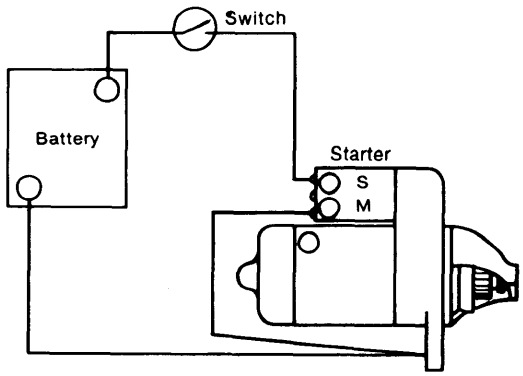

3-4.3 Plunger movement

Adjustment made by adjusting stroke of magnetic plunger to the prescribed value.

(1) Shim adjusting type (S114-206)
Adjust the ℓ-dimension installing shim (Adjusting plate) at the magnetic switch attach section.
There are two kind of shim [Thickness 0.5mm (0.0197in.), 0.8mm (0.0315in.)]

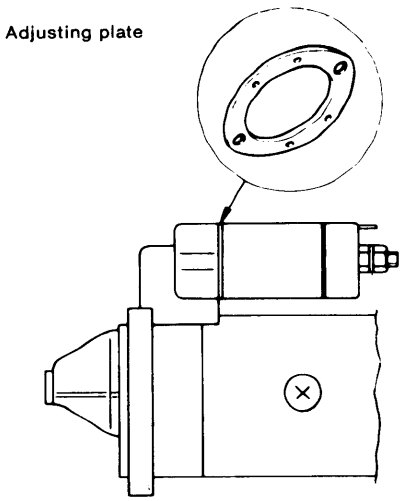

(2) Adjusting screw type (S12-47)
Adjust the ℓ-dimension by adjusting screw and nut.

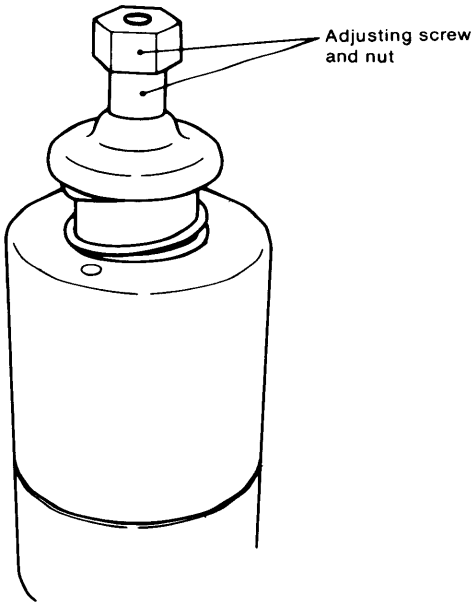

3-4.4 Pinion lock torque measurement

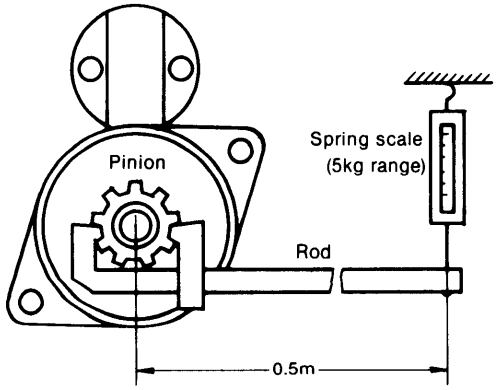

3-4.5 Mesh clearance

Mesh clearance is the distance between the flywheel ring gear and starter motor pinion in the rest position. This clearance should be between 3 mm to 5 mm.

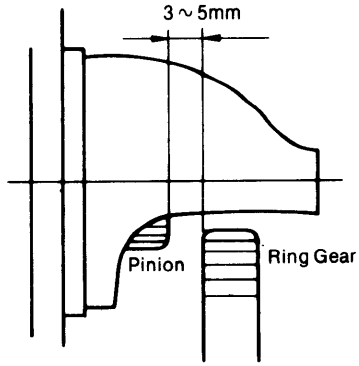

3-5 Disassembly

3-5.1 Magnetic switch

(1) Disconnect magentic switch wiring.
(2) Remove through bolt mounting magnetic switch.
(3) Remove magnetic switch.

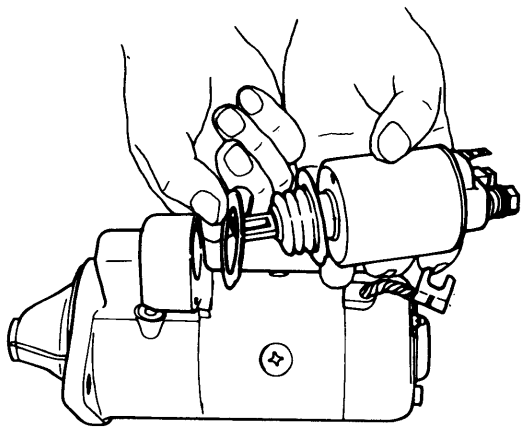

3-5.2 Rear cover

(1) Remove dust cover.

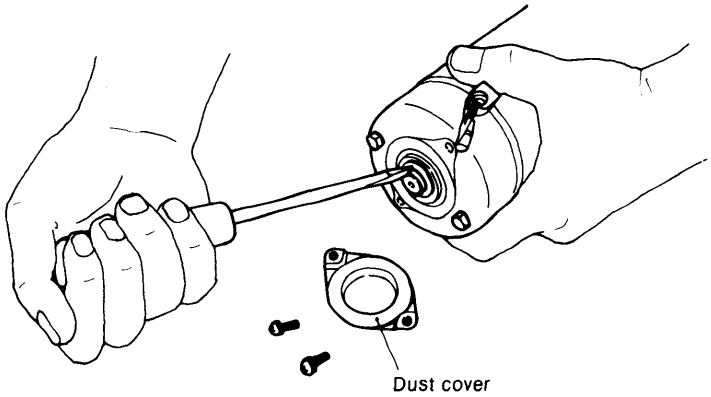

(2) Remove E-ring, and remove thrust washer (be careful not to lose the washer and shim).
(3) Remove the two through bolts holding the rear cover and the two screws holding the brush holder.
(4) Remove rear cover.

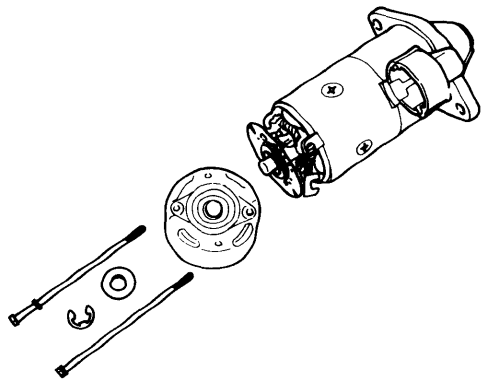

3-5.3 Brush holder

(1) Float (–)brush from the commutator.
(2) Remove (+)brush from the brush holder.
(3) Remove brush holder.

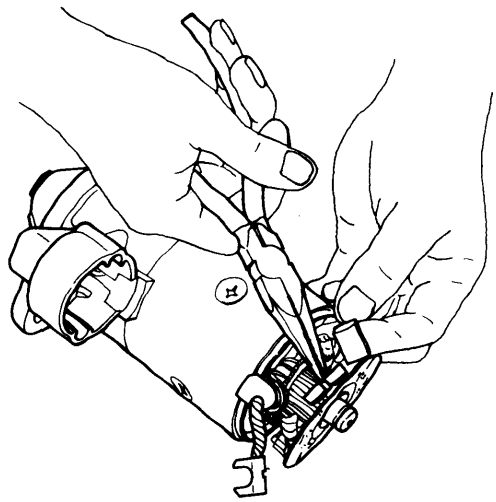

3-5.4 Yoke

(1) Remove yoke. Pull it out slowly so that it does not strike against other parts.

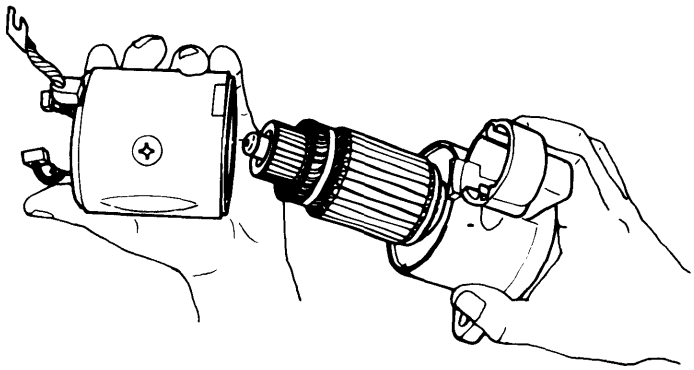

3-5.5 Armature

(1) Slide pinion stopper to pinion side.

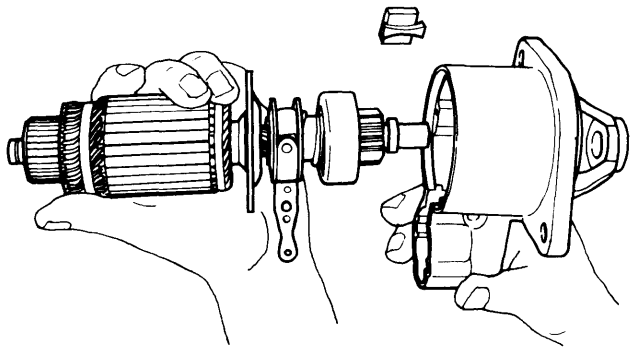

(2) Remove the pinion stopper clip.

3-5.6 Pinion

(1) Slide the pinion stopper to the pinion side.
(2) Remove the pinion stopper clip.
(3) Remove the pinion from the armature.

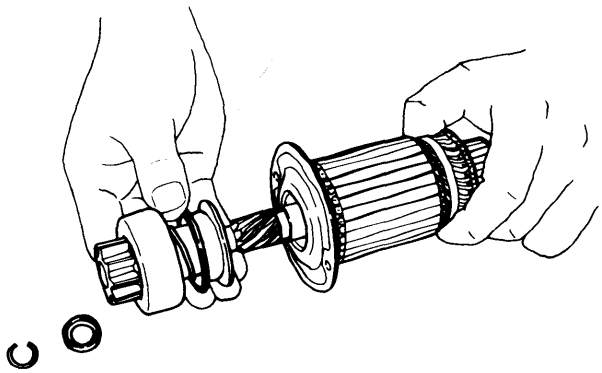

3-6 Inspection

3-6.1 Armature

(1) Commutator

Inspect the surface of the commutator. If corroded or pitted, sand with #500 ~ #600 sandpaper. If the commutator is severely pitted, grind it to within a surface roughness of at least 0.4 by turning it on a lathe. Replace the commutator if damage is irreparable.

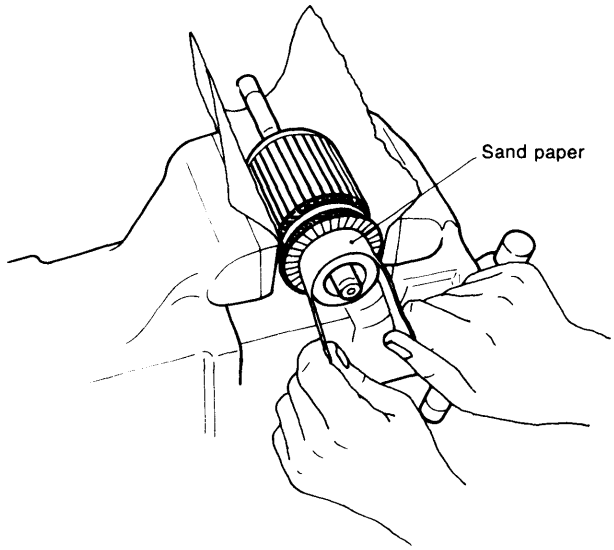

mm (in.)

Applicable model	2QM20 (H)		3QM30 (H)	
	S114-206		S12-47	
	Maintenance standard	Wear limit	Maintenance standard	Wear limit
Commutator outside diameter	ø40 (1.5748)	ø38 (1.496)	ø43 (1.693)	ø40 (1.575)
Commutator run-out	Within 0.04 (0.0016)	0.2 (0.0079)	Within 0.03 (0.0012)	0.2 (0.0079)
Difference between maximum diameter and minimum diameter	Repair limit 0.4 (0.0157)	Repair accuracy 0.05 (0.002)	Repair limit 0.4 (0.0157)	Repair accuracy 0.05 (0.002)

(2) Mica undercut

Check the mica undercut, correct with a hacksaw blade when the undercut is too shallow.

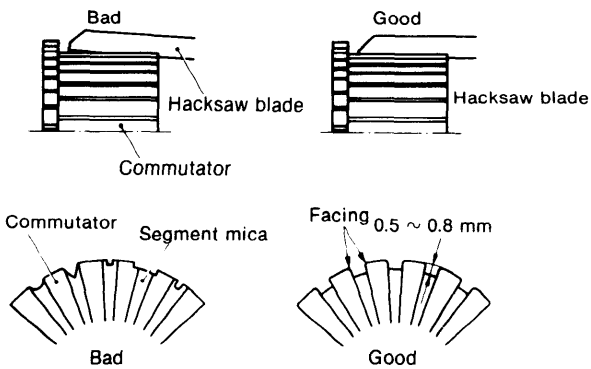

mm (in.)

	Maintenance standard	Repair limit
Mica undercut	0.2 (0.0079)	0.5 ~ 0.8 (0.0197 ~ 0.0315)

(3) Armature coil ground test

Using a tester, check for continuity between the commutator and the shaft (or armature core). Continuity indicates that these points are grounded and that the armature must be replaced.

1) Short test...existence of broken or disconnected coil.
2) Insulation test...between commutator and armature core or distortion shaft.

Checking commutator for insulation de fects.

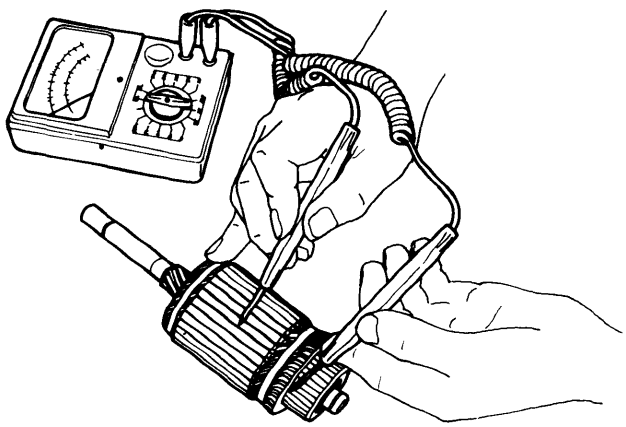

Checking armature windings for insulation faults.

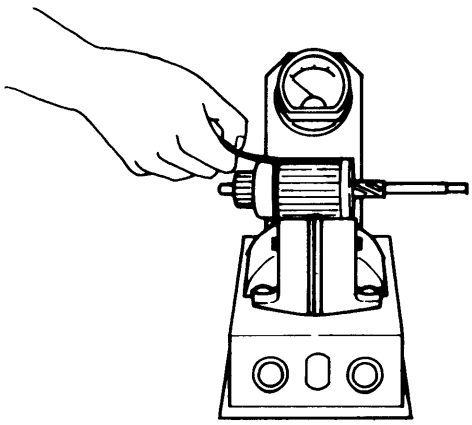

(4) Armature shaft outside diameter
Measure the outside diameter of the armature shaft at four locations: front, center, end, and pinion. Replace the armature if the shaft is excessively worn.
Check the bend of the shaft; replace the armature if the bend exceeds 0.08mm (0.0031in.)

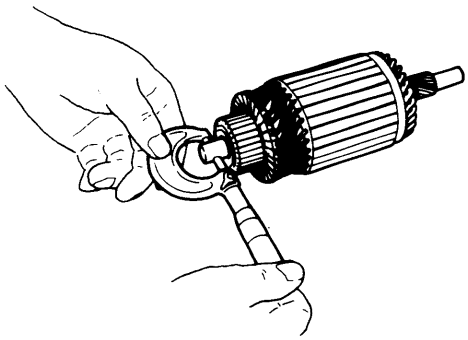

3-6.2 Field coil

(1) Open test
Check for continuity between the terminals connecting the field coil brushes. Continuity indicates that the coil is open and that the coil must be replaced.

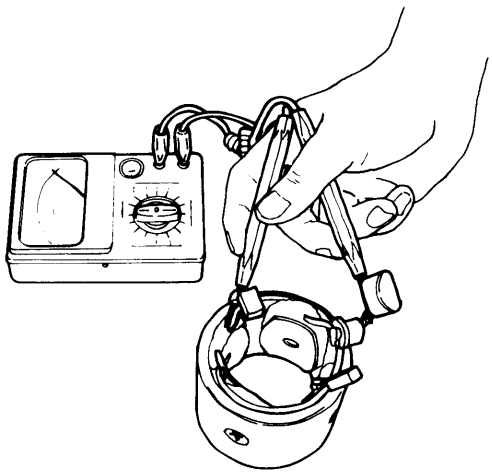

(2) Short test
Check for continuity between the yoke and any field coil terminal. Continuity indicates that the coil is shorted and that it must be replaced.

(3) Cleaning the inside of the yoke
If any carbon powder or rust has collected on the inside of the yoke, blow the yoke out with dry compressed air.
*Do not remove the field coil from the yoke.

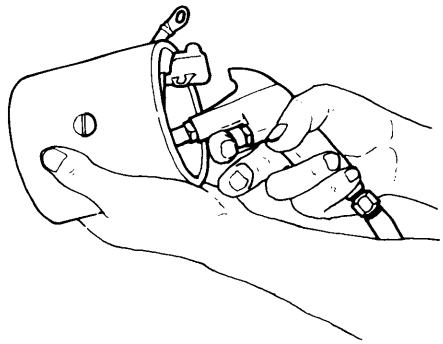

3-6.3 Brush

The brushes are quickly worn down by the motor. When the brushes are defective, the output of the motor will drop.

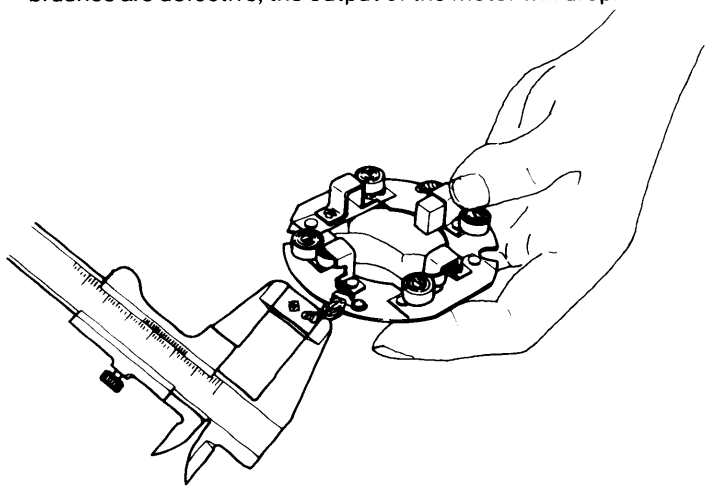

(1) Brush dimensions
Replace brushes which have been worn beyond the specified wear limit.

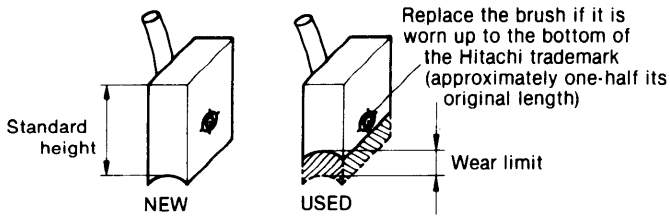

mm (in.)

	S114-206	S12-47
Brush standard height	16 (0.6299)	20 (0.7874)
Wear limit	4 (0.1575)	7 (0.2756)

(2) Brush appearance and movement in brush holder
If the outside of the brush is damaged, replace it. If the movement of the brushes in the brush holder is hampered because the holder is rusted, repair or replace the holder.

(3) Brush spring
Since the brush spring pushes the brush against the commutator while the motor is running, a weak or defective spring will cause excessive brush wear, resulting in sparking between the brush and the commutator during operation. Measure the spring force with a spring balance; replace the spring when the difference between the standard value and the measured value exceeds ±0.2kg.

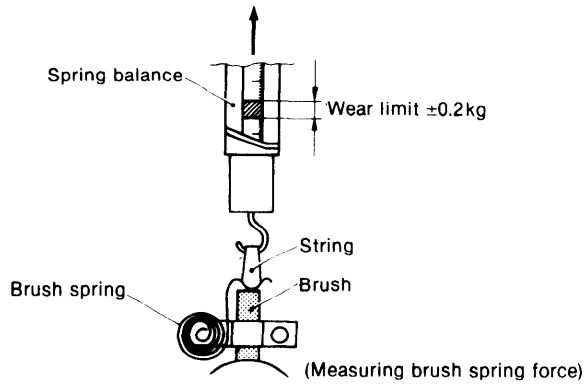

(Measuring brush spring force)

	S114-206	S12-47
Standard spring load	1.6kg (3.527 lb)	0.85kg (1.8737 lb)

(4) Brush holder ground test
Check for continuity between the insulated brush holder and the base of the brush holder assembly. Continuity indicates that these two points are grounded and that the holder must be replaced.

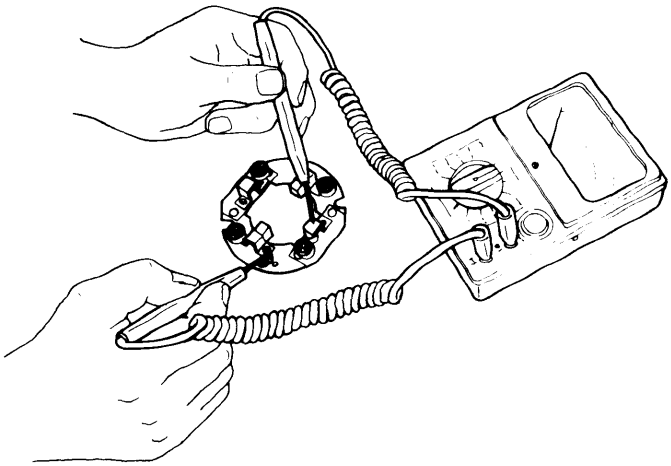

3-6.4 Magnetic switch

(1) Shunt coil continuity test
Check for continuity between the S terminal and the magnetic switch body (metal part). Continuity indicates that the coil is open and that the switch must be replaced.

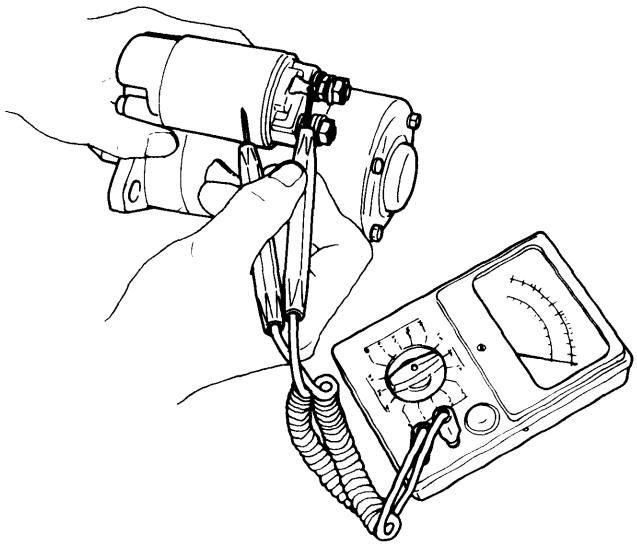

	S114-206	S12-47
Coil resistance (at 20°C)	0.59Ω	0.78Ω

(2) Series coil continuity test
Check for continuity between the S terminal and M terminal. Continuity indicates that the coil is open and that it must be replaced.

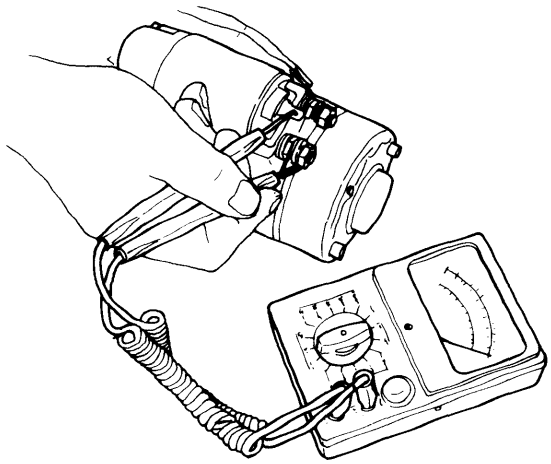

	S114-206	S12-47
Resistance value (at 20°C)	0.262Ω	0.25Ω

(3) Contactor contact test
Push the plunger with your finger and check for continuity between the M terminal and B terminal. Continuity indicates that the contact is faulty and that the contactor must be replaced.

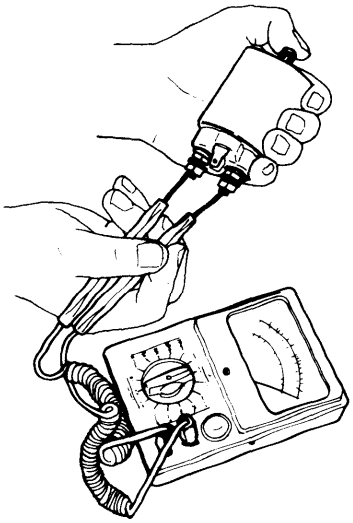

3-6.5 Pinion

(1) Inspect the pinion teeth and replace the pinion if the teeth are excessively worn or damaged.
(2) Check if the pinion slides smoothly; replace the pinion if faulty.
(3) Inspect the springs and replace if faulty.
(4) Replace the clutch if it slips or seizes.

3-7 Reassembly precautions

Reassemble the starter motor in the reverse order of disassembly, paying particular attention to the following:

(1) Torsion spring and shift lever
Hook the torsion spring into the hole in the magnetic switch and insert the shift lever into the notch in the plunger of the magnetic switch through the torsion spring.

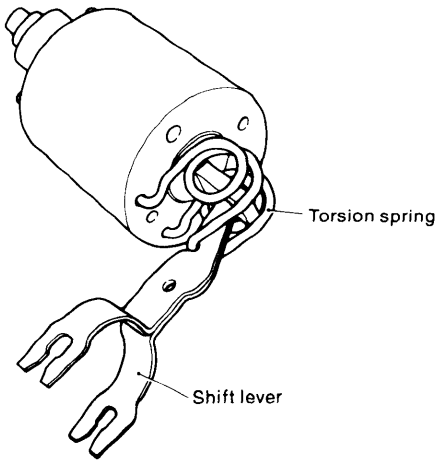

(2) Mounting the magentic switch
Attach the shift lever to the pinion; assemble the gear case as shown below.
Do not forget to install the dust cover before assembling the gear case.
After reassembly, check by conducting no-load operation.

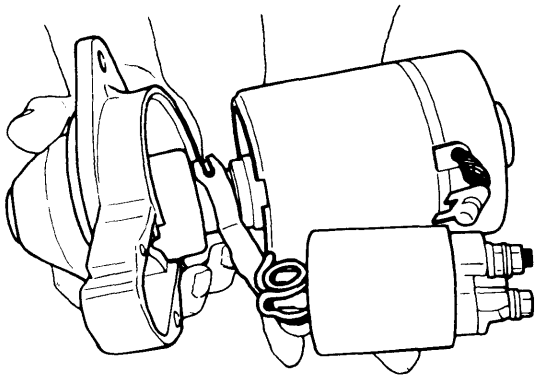

(3) Lubrication
Lubricate each bearing and spline (points indicated in the figure below) with high quality "Hitachi Electrical Equipment Grease A".
The following lubricants may be used in place of Hitachi Electrical Equipment Grease A.

Magnetic switch plunger	Shell	Aeroshell No. 7
Bearing and spline	Shell	Albania Grease No. 2

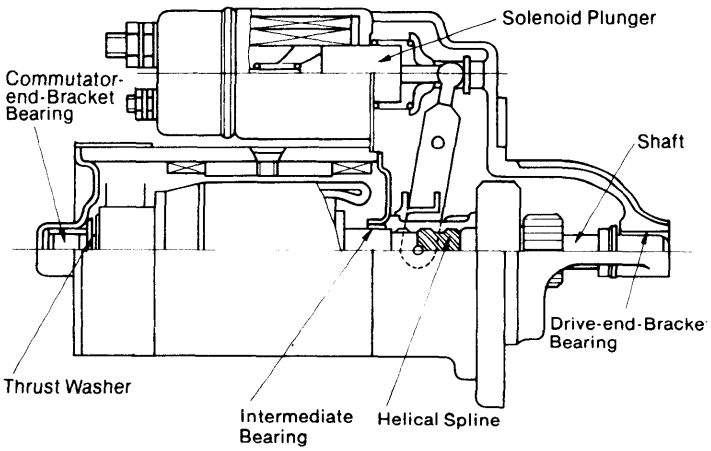

Lubrication chart

3-8 Testing

3-8.1 No load test

Test procedure

(1) Connect the positive side of the ammeter (A) to the positive terminal of the battery, and connect the negative side of the ammeter to the B terminal of the starter.

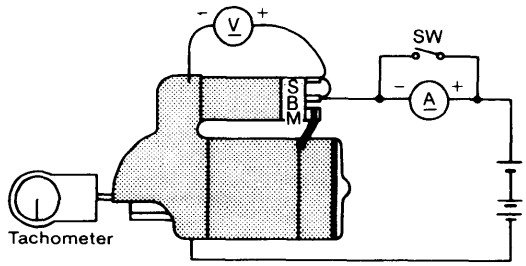

(2) Connect the negative terminal of the battery to the body of the starter.
(3) Connect the positive side of the voltmeter (V) to the B terminal of the starter, and connect the negative side of the voltmeter to the body of the starter.
(4) Attach the tachometer.
(5) Connect the B terminal of the starter to the S terminal of the magnetic switch.

- The magnetic switch should begin operating, and the speed, current, and voltage should be the prescribed values.
- A fully charged battery must be used.
- Since a large current flows when the starter is operated, close the protection circuit switch before initial operation, then open the switch and measure the current after the starter reaches a constant speed.

3-9 Maintenance standard

				S114-206	S12-47
Brash	Standard spring load		kg (lb)	1.6 (3.527)	0.85 (1.8737)
	Standard height		mm (in.)	16 (0.6299)	20 (0.7874)
	Wear limit		mm (in.)	12 (0.472)	13 (0.512)
Magnetic switch	Series coil resistance		Ω	0.324	0.25
	Shunt coil resistance		Ω	0.694	0.78
Commutator	Outside diameter	Maintenance standard	mm (in.)	ø40 (1.5748)	ø43 (1.193)
		Wear limit	mm (in.)	ø38 (1.4961)	ø41 (1.599)
	Difference between maximum diameter and maximum diameter	Repair limit	mm (in.)	0.4 (0.0157)	
		Repair accuracy	mm (in.)	0.05 (0.002)	
	Mica undercut	Maintenance standard	mm (in.)	0.2 (0.0079)	
		Repair limit	mm (in.)	0.5—0.8 (0.0197—0.0315)	
Standard dimension	Brush side bearing	Shaft diameter	mm (in.)	ø12.45—ø12.47 (0.4902—0.4909)	ø14.95—ø14.97 (0.5886—0.5893)
		Bearing inside diameter	mm (in.)	ø12.53 (0.4930)	ø15.015 (0.5911)
	Intermediate bearing	Shaft diameter	mm (in.)	—	ø20.25—ø20.26 (0.7972—0.7976)
		Bearing inside diameter	mm (in.)	—	ø20.55—ø20.53 (0.808—0.809)
	Pinion sliding section	Shaft diameter	mm (in.)	ø11.95—ø11.97 (0.4704—0.4713)	ø13.95—ø13.97 (0.5492—0.550)
		Pinion inside diameter	mm (in.)	ø12.059—ø12.06 (0.47476—0.47480)	ø14.030—ø14.048 (0.5524—0.5531)
	Pinion side bearing	Shaft diameter	mm (in.)	ø12.45—ø12.47 (0.4902—0.4909)	ø13.95—ø13.97 (0.5492—0.550)
		Bearing inside diameter	mm (in.)	ø12.521 (0.4930)	ø14.018 (0.5519)

3-10 Various problems and their remedies

(1) Pinion fails to advance when the starting switch is closed

Problem	Cause	Corrective action
Wiring	Open or loose battery or switch terminal	Repair or retighten
Starting switch	Threaded part connected to pinion section of armature shaft is damaged, and the pinion does not move	Repair contacts, or replace switch
Starter motor	Threaded part connected to pinion section of armature shaft is damaged, and the pinion does not move	Replace
Magnetic switch	Plunger of magnetic switch malfunctioning or coil shorted	Repair or replace

(2) Pinion is engaged and motor rotates, but rotation is not transmitted to the engine

Problem	Cause	Corrective action
Starting motor	Overrunning clutch faulty	Replace

(3) Motor rotates at full power before pinion engages ring gear

Problem	Cause	Corrective action
Starter motor	Torsion spring permanently strained	Replace

(4) Pinion engages ring gear, but starter motor fails to rotate

Problem	Cause	Corrective action
Wiring	Wires connecting battery and magnetic switch open or wire connecting ground, magnetic switch and motor terminals loose	Repair, retighten, or replace wire
Starter motor	Pinion and ring gear engagement faulty Motor mounting faulty Brush worn or contacting brush spring faulty Commutator dirty Armature, field coil faulty Field coil and brush connection loose	Replace Remount Replace Repair Repair or replace Retighten
Magnetic switch	Contactor contact faulty Contactor contacts pitted	Replace Replace

(5) Motor fails to stop when starting switch is opened after engine starts

Problem	Cause	Corrective action
Starting switch	Switch faulty	Replace
Magnetic switch	Switch faulty	Replace

4. Alternator

The alternator serves to keep the battery constantly charged. It is installed on the cylinder block by a bracket, and is driven from the V-pulley at the end of the crankshaft by a V-belt.
The type of alternator used in this engine is ideal for high speed engines having a wide range of engine speeds. It contains diodes that convert AC to DC, and an IC regulator that keep the generated voltage constant even when the engine speed changes.

4-1 Specifications

		Standard	Option
Type	Alternator	LR135-31	LR155-04
	Regulator	TR1Z-28	TR1Z-28
Battery voltage		12V	12V
Output current		35A/5000 rpm	55A/5000 rpm
Polarity		2-wire system	2-wire system
Direction of rotation		CW/CCW	CW/CCW
Regulated voltage		13V	14.3 ±0.3V
Speed at 13V		1000 rpm or less	1000 rpm or less
Weight		4kg (8.8185lb)	5.5kg (12.125lb)

CW: Clockwise CCW: Counterclockwise

4-2 Characteristics

(1) LR135-31

Standard speed characteristic of 12V-35A Alternator with IC regulator.

—Cold
...Warm ("Warm" is the state of the engine reached after a temperature rise test is conducted at a constant 5000 rpm maximum output.)

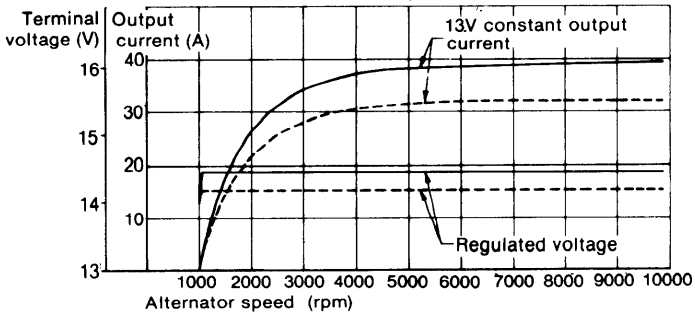

(2) LR155-04

Standard speed characteristic of 12V-55A alternator with IC regulator.

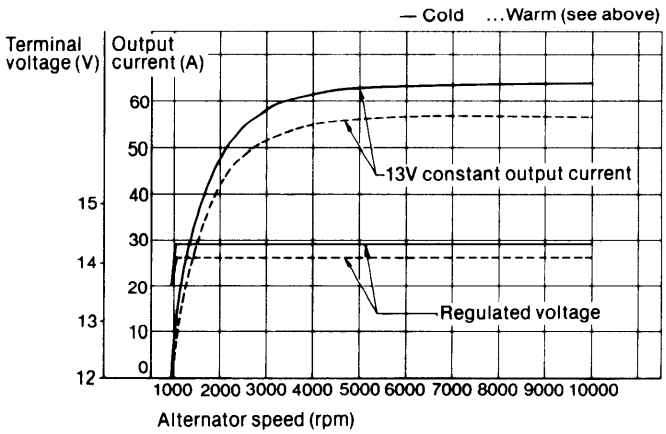

4-3 Construction

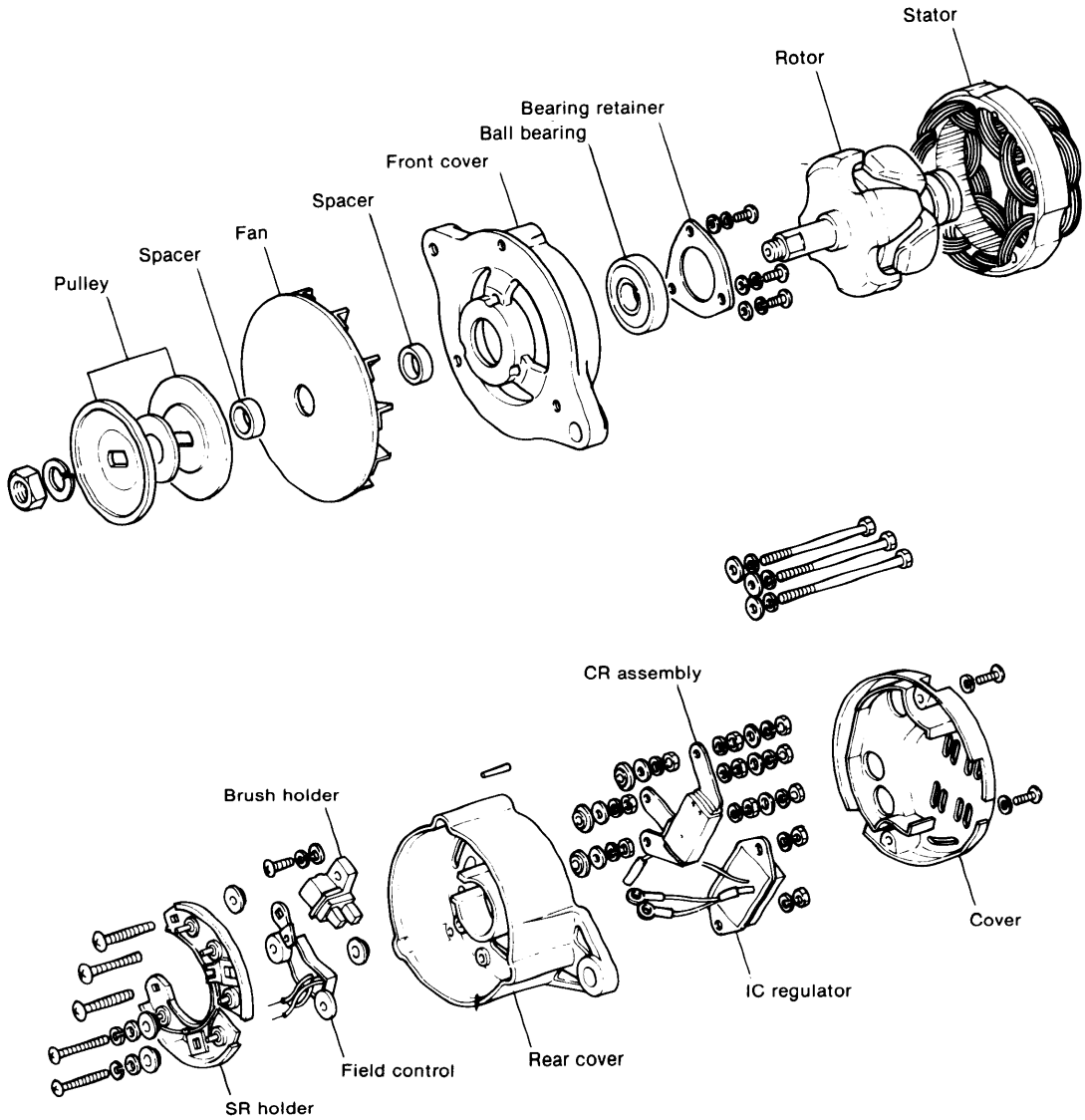

LR135-31

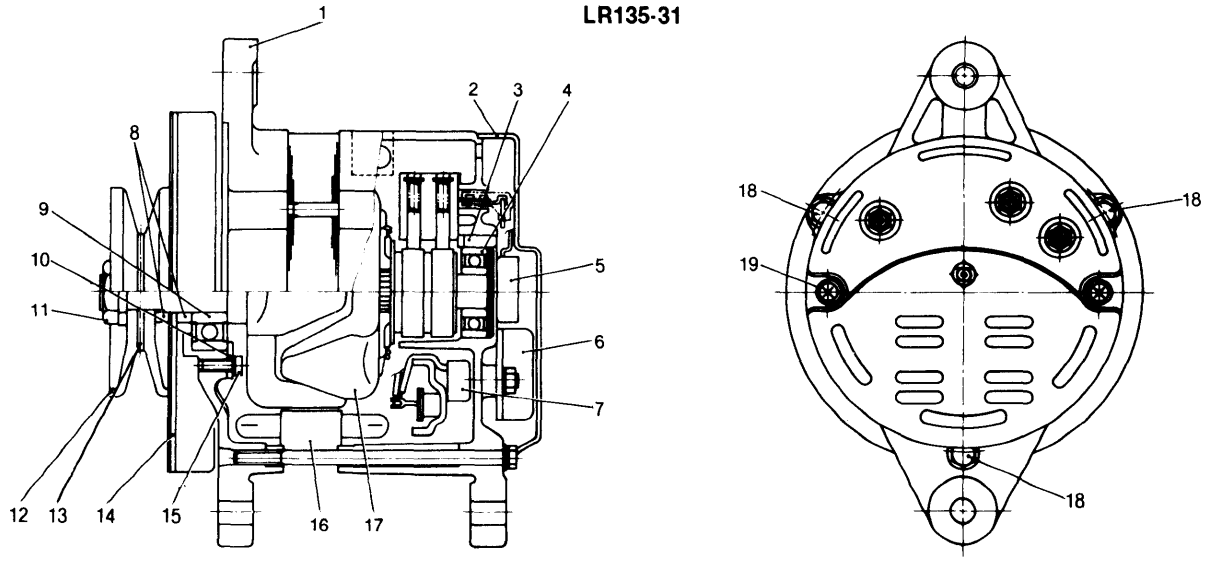

1 Front cover assembly
2 Cover
3 Pin (nylon resin)
4 Ball bearing
5 CR assembly
6 IC regulator
7 Field control unit
8 Spacer
9 Ball bearing
10 Bearing retainer
11 Pulley nut
12 Pulley
13 Pulley spacer
14 Fan
15 Screw
16 Stator assembly
17 Rotor assembly
18 Through bolt
19 Screw

LR155-04

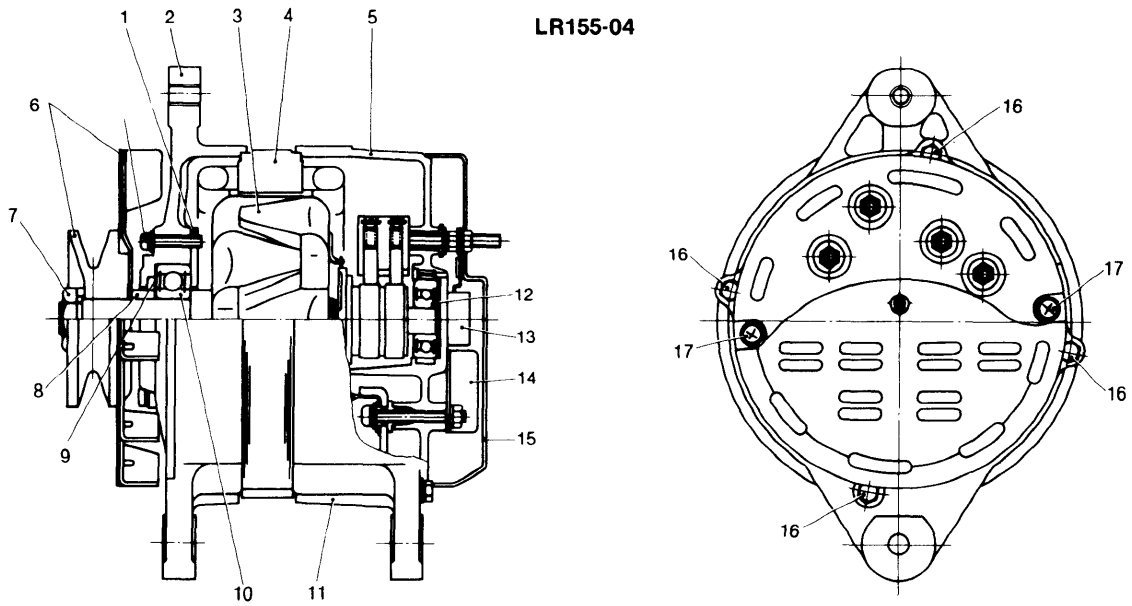

1 Bearing retainer
2 Front cover assembly
3 Rotor assembly
4 Stator assembly
5 Rear cover
6 Pully assembly
7 Pully nut
8 Spacer
9 Bearing stopper
10 Ball bearing
11 Rear cover assembly
12 Ball bearing
13 CR assembly
14 IC regulator
15 Cover
16 Through bolt
17 Screw

4-4 Operation (LR135-31)

4-4.1 Circuit diagram

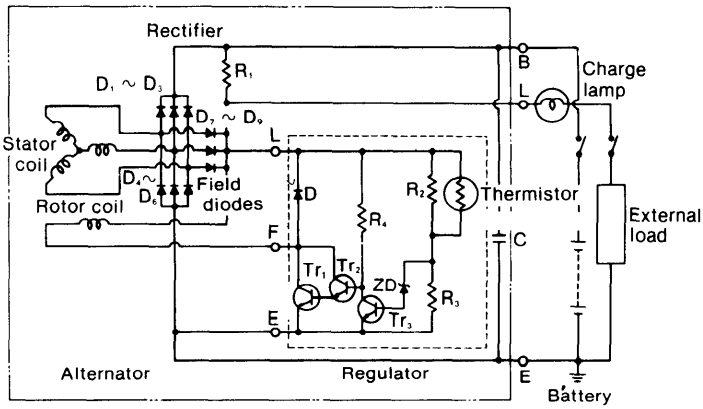

B: Generator output terminal D: Transistor protection diode
L: Charge lamp terminal ZD: Zener diode
E: Ground (battery (−)) terminal
$Tr_1 \sim Tr_3$: Transistor $D_1 \sim D_6$: Output rectification diodes
$R_1 \sim R_4$: Resistor
$D_7 \sim D_9$: ON/OFF operation of charge lamp and rotor coil current field supply diodes C: Condenser

Basically, this circuit consists of an output Tr_1 transistor that turns the alternator rotor coil current on and off, a Tr_2 transistor that passes the base current to Tr_1, a Tr_3 control transistor that controls Tr_2, a zener diode ZD_1 and resistors R_1, R_2, R_3, and R_4, which pass on the current when the battery voltage reaches the regulated voltage, and a thermistor, as shown in the above figure.

4-4.2 Description of operation

(1) Initial excitation

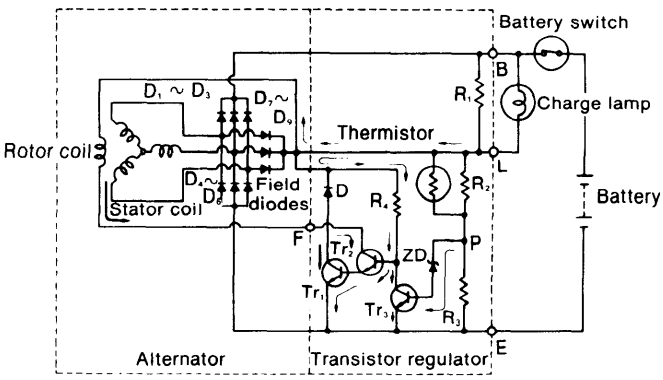

When the battery switch is closed, current flows into Tr_2 and Tr_1, and the charge lamp lights up. At this time, the voltage at point P is lower than the zener voltage and current does not flow through the ZD (zener diode). Therefore, the base current does not flow through Tr_3, and Tr_3 is turned OFF.

The resistor R_1 is inserted in series with the charge lamp to prevent interruption of the rotor coil current if the charge lamp blows out, and to reduce the rise in speed (speed automatically adjusted) caused by the increase in the initial exciting current.

(2) Initial rotation

The alternator consists of field diodes (D7 ∼ D9).

When the alternator is operated, generation begins. When the speed of the alternator rises until its output voltage exceeds the battery terminal voltage, battery charging beings.

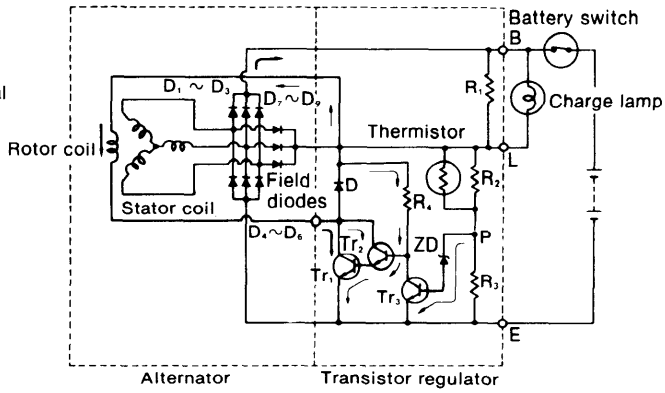

At this stage, the voltages at terminal B and terminal L are equal, and the charge lamp goes out to indicate that charging has begun. When charging begins, the Tr_2 base current, Tr_1 base current, and Tr_1 collector current (rotor coil current) are supplied from the alternator through D7 ∼ D9 (field diodes). Since R_2 and R_3 are selected so that the voltage across P-E turns the ZD (zener diode) ON when the voltage across B-E exceeds the regulated voltage of the regulator, when the ZD (zener diode) is conducting, current flows through the path indicated above.

(3) Operation

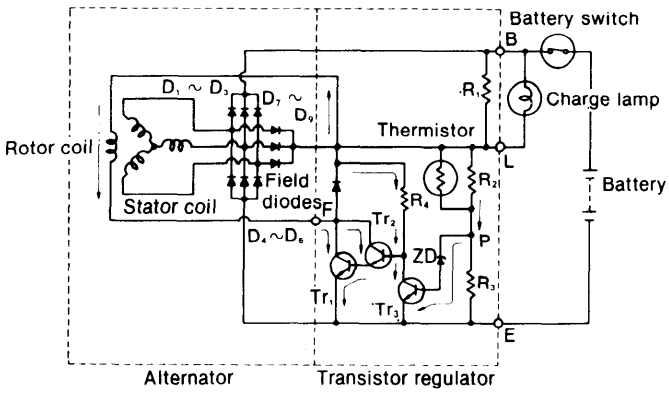

A Tr_3 collector-emitter voltage of at least 0.6V is necessary to allow the base current to flow through Tr_2 and Tr_1. But since the Tr_3 collector-emitter voltage is about 0.3V when Tr_3 is conducting, the Tr_2 and Tr_3 base current is interrupted, Tr_2 and Tr_1 are turned OFF, and current does not flow through the rotor coil.

When the rotor coil current is stopped, the alternator output voltage drops, the voltage across P-E applied to the ZD (zener diode) drops below the zener voltage, the zener diode is turned OFF, and the Tr_3 base current is interrupted.

As a result, Tr_3 is turned OFF, the base voltage of Tr_2 rises, and base current begins to flow through Tr_1.

This causes Tr_1 to conduct and the rotor coil current to

begins to flow again.
As can be seen from the above description, when the output voltage of the generator is lower than the regulated voltage the Tr_1 output transistor conducts and rotor coil current flows. When the alternator output voltage is higher than the regulated voltage, control transistor Tr_3 conducts, output transistor Tr_1 is turned OFF, and the rotor coil current is interrupted.
The battery charging voltage is kept constant by turning the output transistor ON and OFF repeatedly in this manner.

4-5 Wiring (LR135-31)

(1) Wiring diagram

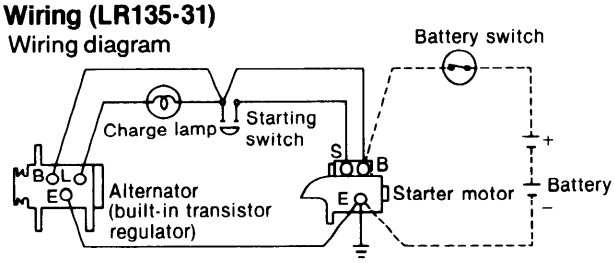

(2) Terminal connections
The alternator has the following terminals. Connect these terminals as indicated below.

Symbol	Terminal name	Connection to external wiring
B	Battery terminal	To battery (+) side
E	Ground terminal	To battery (−) side
L	Lamp (charge) terminal	To charge lamp terminal

The IC regulator terminals are as follows:

Symbol	Lead color
B	W (white)
E	B (black)
L	L (red)

4-6 LR155-04 (Optional) R terminal

(1) Characteristics of the R terminal

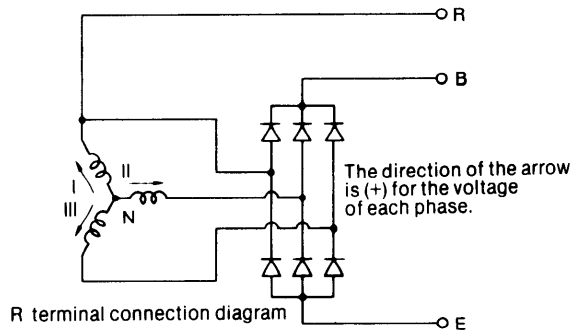

R terminal connection diagram

On the Y-connection (star connection) type alternator, these terminals are known as the N and R terminals, respectively, Since a large-ripple, half-wave, rectified wave form appears at this terminal, and the frequency is proportional to the speed of the alternator, this terminal is used to detect engine speed. In this case a pulse type tachometer is required.

(2) Output wave form and voltage

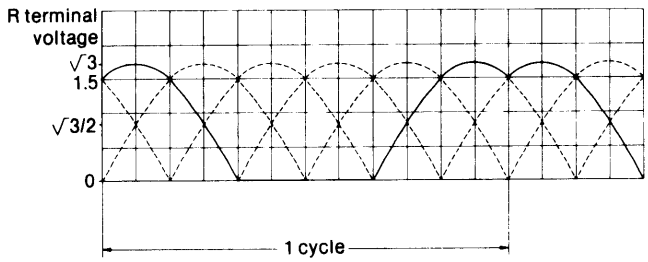

(3) Frequency

$$\text{Generation frequency Rf (Hz)} = \frac{\text{Alternator speed}}{10}$$

The generation frequency when the alternator pully ratio is i = 2.1 and the engine speed is 1000 rpm is,

$$Rf = \frac{1000 \times 2.1}{10} = 210\text{Hz}$$

The tachometer should be adjusted to conform to the above ratio.

(4) R terminal wiring

1) Incorrect wiring of the R terminal will cause various troubles. When wiring the R terminal, check carefully by observing the charge lamp; make sure that the wiring has been done correctly.

• Wiring example

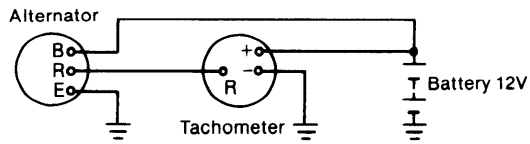

2) The R terminal voltage is a large-ripple, half-wave, rectified wave form. Its frequency is equal to the frequency of each phase. Consequently, the same tachometer cannot be used if the number of poles of the alternator is different. When a tachometer is used to detect frequency, careful attention must be given to the number of poles.

4-7 Alternator handling precautions

(1) Pay attention to the polarity of the battery; be careful not to connect it in reverse polarity. If the battery is connected in reverse polarity, the battery will be shorted by the diode of the alternator, an overcurrent will result, the diodes and transistor regulator will be destroyed, and the wiring harness will be burned.
(2) Connect the terminals correctly.
(3) When charging the battery from outside, such as during rapid charging, disconnect the alternator B terminal or the battery terminals.
(4) Do not short the terminals.
(5) Never test the alternator with a high voltage megger.

4-8 Alternator disassembly

Disassemble the alternator as follows.
The major points of disassembly are the removal of the cover, the separation of the front and rear sides, and detailed disassembly.

(1) Remove the cover attached to the rear cover, remove the through bolts, and disassemble into front and rear sides.

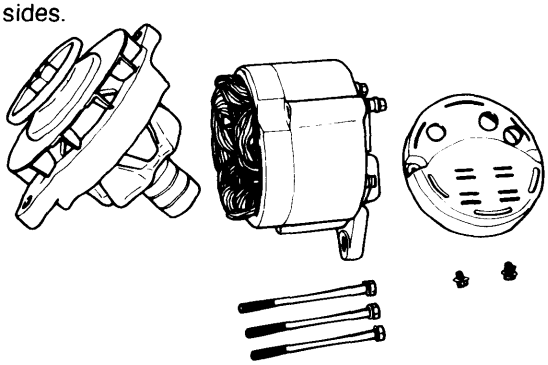

(2) Then when disassembling the front side pulley and fan, front cover and rotor, clamp the rotor in a vice through the copper plates and loosen the pulley nut, as shown in the figure.

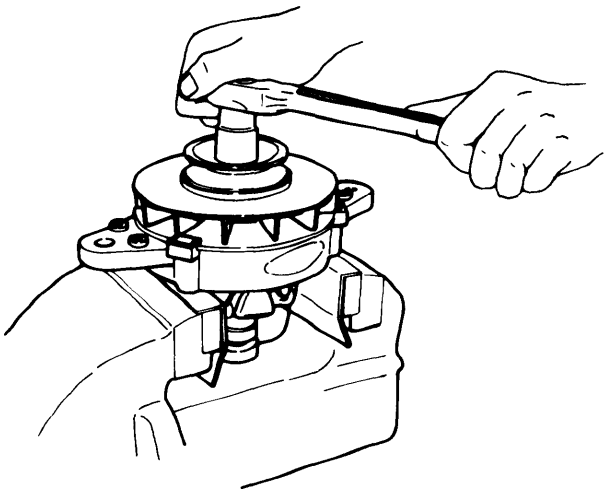

(3) When the fan and pulley have been removed, the rotor can be pulled from the front cover by hand.

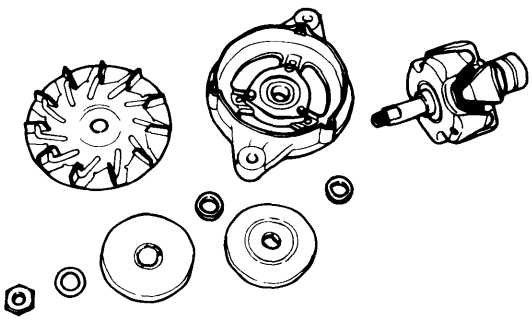

(4) Next, remove the bearing attached to the front cover. Loosen the bearing protector mounting bolts and pull the bearing by applying pressure to the bearing from the front cover.

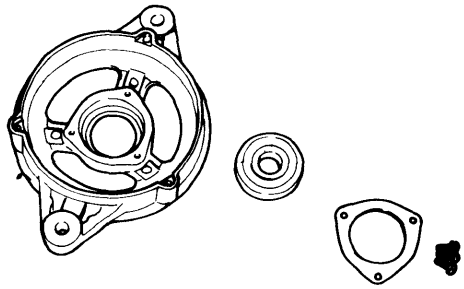

(5) Disassemble the rear side.
First, disconnect the resistor and IC regulator from the terminals.

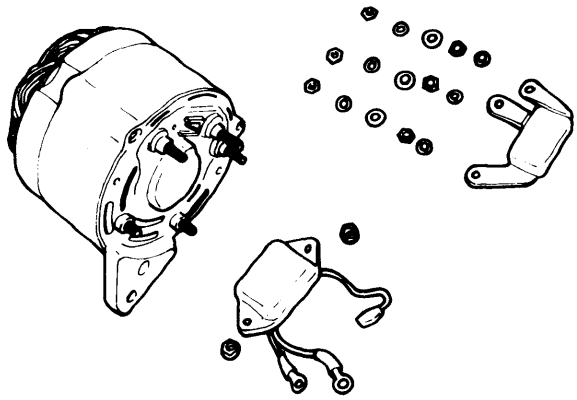

(6) Remove the bolts holding the SR holder and brush holder, remove the B.E.L. terminal nuts, and disassemble into the rear cover and stator (with SR holder).

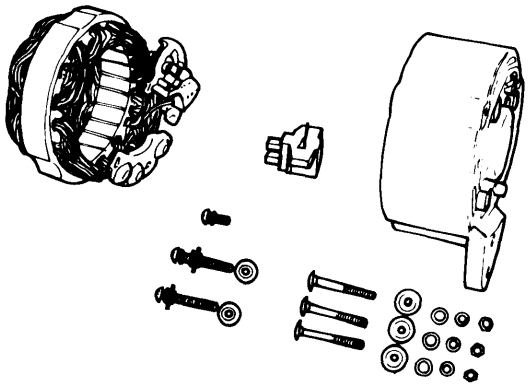

(7) Melt the solder connecting the stator and the diode, and break it down to the stator, SR holder and auxiliary diode.

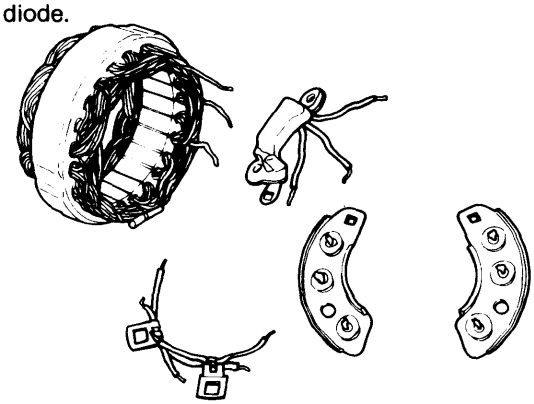

(8) Pull out the pin (nylon resin) inserted into the brush cover mounting section of the rear cover, and disassemble the rear cover.

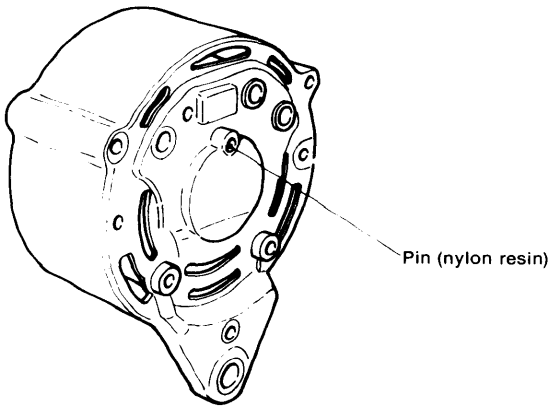

(9) When (1)—(8) above are completed, the alternator is completely disassembled.

4-9 Inspection and adjustment

4-9.1 Diodes

(1) Diode short test

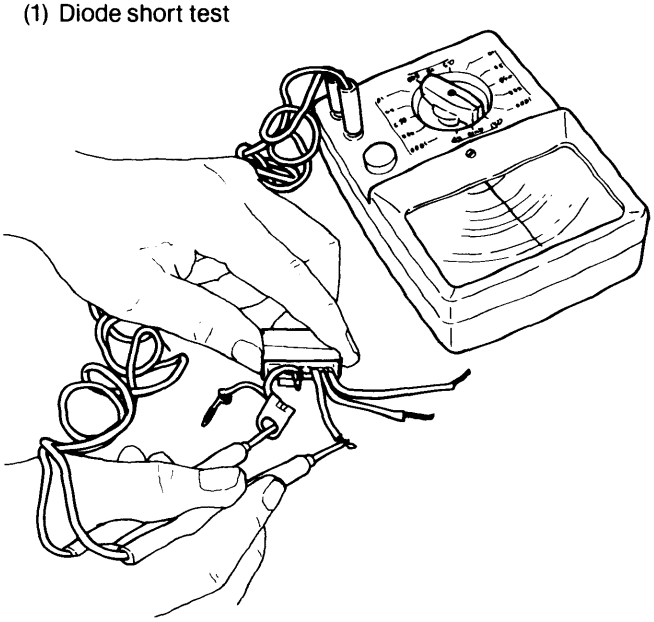

A set of 6 diodes and a set of 3 moulded diodes (field diodes) are used. The (+) diodes and (−) diodes of the six diode set conduct in opposite directions. (See the figure below.) Replace the diodes that conduct in both directions and the diodes that do not conduct in both directions.

Test for the continuity of each diode.

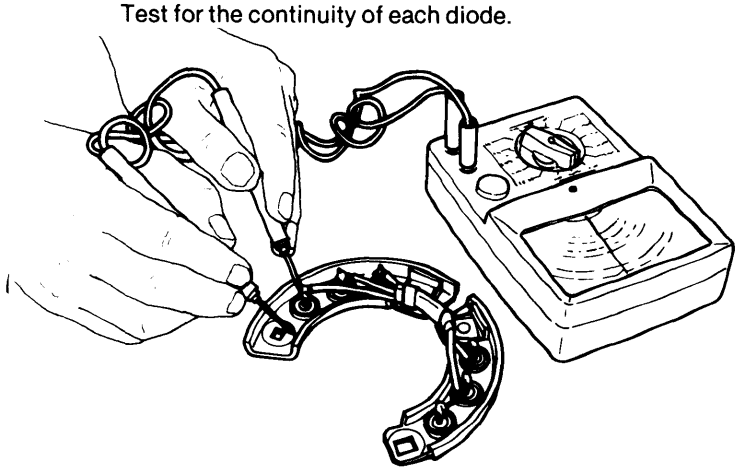

CAUTION: If a high voltage megger is used, a high voltage will be applied to the diode and the diode will be destroyed. Therefore, never test the diodes with a high voltage megger, etc.

(2) Replacement

1) Remove the cover.
2) Unsolder the diode assembly wiring. (CAUTION: Hold the diode with needle nose pliers so that the heat of the soldering iron is not transmitted to the diode.)
3) Remove the diode assembly mounting nut and bolt, and remove the diode ass'y.
   Remove the nut and bolt holding the diode assembly in place, and then remove the diode assembly.

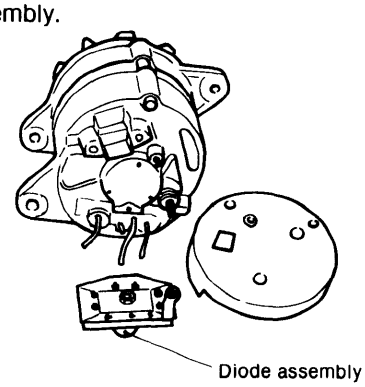

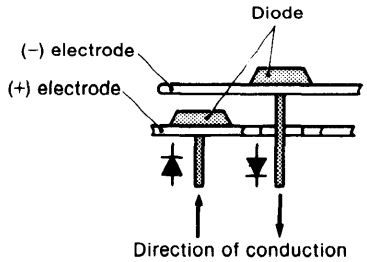

4-9.2 Rotor

(1) Slip ring wear
Because the slip rings wear very little, the diameter of the rings must be measured with a micrometer. Replace the rings (rotor assembly) when wear exceeds the maintenance standard by 1 mm.

mm (in.)

	Maintenance standard	Wear limit
Slip ring outside diameter	ø31 (1.2205)	ø30 (1.1811)

(2) Slip ring roughness
The slip ring should be smooth with no surface oil, etc. If the surface of the rings is rough, polish with #500 ~ #600 sandpaper, and if the surface is soiled, clean with a cloth dipped in alcohol.

(3) Rotor coil short test
Check the continuity between the rotor coil and slip ring with a tester. The resistance should be near the prescribed value.
If the resistance is extemely low, there is a layer short at the rotor coil; if the resistance is infinite, the coil is open. In either case, replace the rotor.

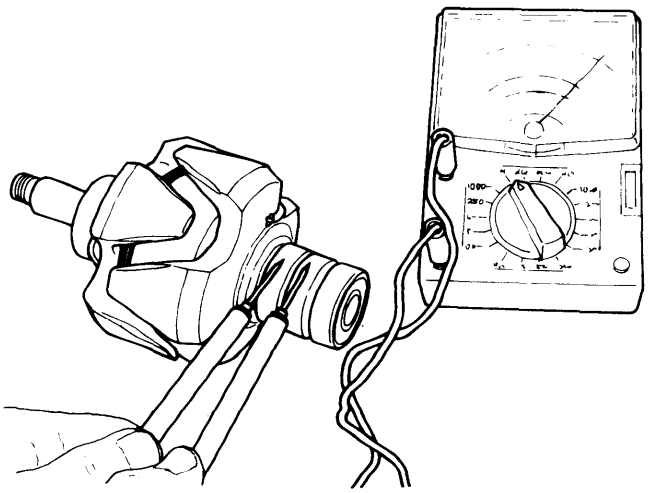

Resistance value:	Approx 3.83 ±0.15Ω (at 20°C)

(4) Rotor coil ground test
Check the rotor coil for grounding with a tester, or by checking the continuity between one slip ring and the rotor core or shaft.

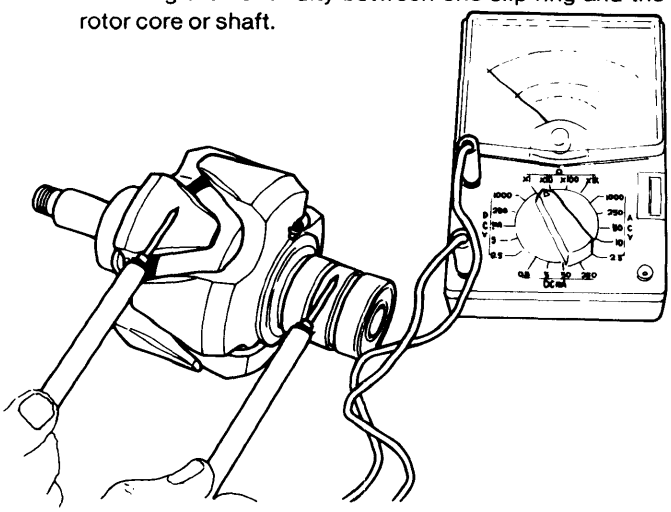

4-9.3 Stator coil

(1) Stator coil short test
Check the continuity between the terminals of the stator coil. Measure the resistance between the output terminals with a tester. The resistance should be near the prescribed value.
If the stator coil is open, indicated by infinite resistance, it must be replaced.

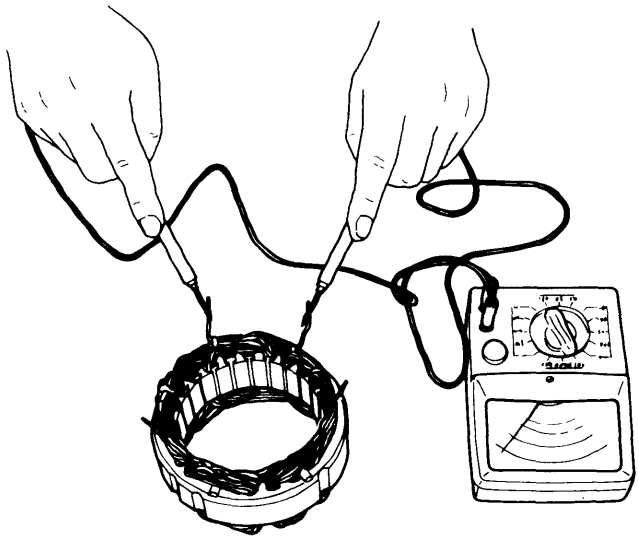

Resistance value	Approx 0.128Ω (at 20°C) 2-phase resistance

(2) Stator coil ground test
Check the continuity between one of the stator coil leads and the stator core.
The stator coil is good if the resistance is infinite. If the stator core is grounded, indicated by continuity, it must be replaced.

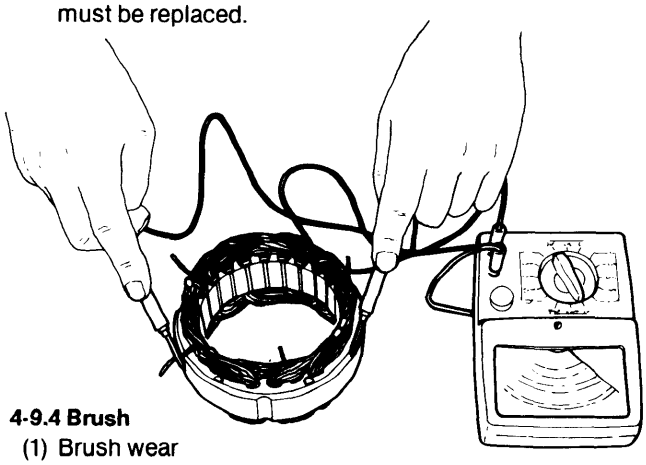

4-9.4 Brush

(1) Brush wear
Check the brush length.
The brush wears very little, but replace the brush if worn over the wear limit line printed on the brush.

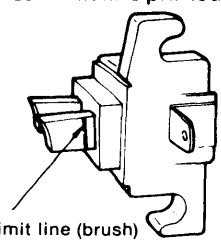

mm (in.)

	Maintenance standard	Wear limit
Brush length	14.5 (0.5709)	7.0 (0.2756)

(2) Brush spring pressure measurement
Measure the pressure with the brush protruding 2 mm from the brush holder, as shown in the figure. The spring is normal if the measured value is over 150 gr. Confirm that the brush moves smoothly in the holder.

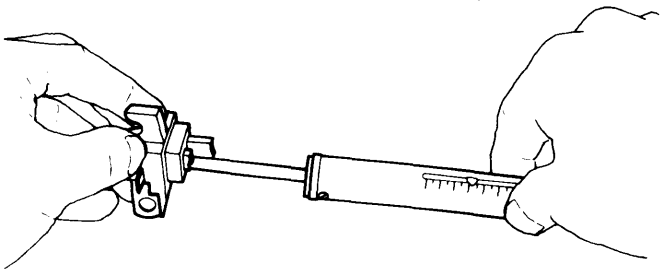

Brush spring strength	300 ±45g (0.562 ~ 0.761 lb.) (New brush)

4-10 Reassembly precautions

After inspection and servicing, reassemble the parts in the reverse order of disassembly, paying careful attention to the following items:

(1) When soldering the stator coil leads and diodes, hold them with needle nose pliers and solder quickly.
(2) Be sure that the insulation bushings, etc. are installed correctly when installing the terminal bolts and SR holder mounting screw.

4-11 Alternator performance test

4-11.1 Test equipment

Test equipment	Quantity	Specifications
Battery	1	12V
DC voltmeter	1	0 ~ 50V Range 0.5
DC ammeter	1	0 ~ 50A Range 1.0
Variable resistor	1	0 ~ 1Ω capacity:1 kW
Switch	2	Switch capacity: 40 A

4-11.2 Performance test circuit

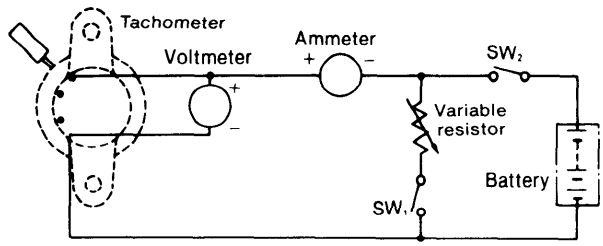

4-11.3 Performance test

(1) Speed measurement at 13 V (26 V rise speed)
  1) Start the alternator slowly after opening SW1 and closing SW2.
  2) After the alternator has reached a speed of approximately 500 rpm, open switch SW2.
  3) Gradually increase the alternator speed while watching the voltmeter, and read the speed on the tachometer when the voltage reaches 13 V.
  4) The speed at this time is 1,000 rpm or less, and is the 13 V rise speed.

(2) Output current measurement
  1) Set the resistance of the variable resistor in the circuit in the figure to maximum, and drive the alternator after closing SW1 and SW2.
  2) Increase the alternator speed to 5,000rpm by adjusting the variable resistor, maintaining the voltage at 13 V.
  3) Measure the deflection of the ammeter at this time.
  4) An output current of 31 A is normal.

(3) Performance test precautions
  1) Connect the alternator A terminal and battery (+) terminal, and the E terminal and battery (−) terminal with 2.5m or less of wiring having a cross-sectional area of 8 mm² or more.
  2) Check the wires for correct or loose connection.

4-12 Alternator troubleshooting and repair

(1) Failure to charge

Problem	Cause	Corrective action
Wiring, current	Open, shorted, or disconnected	Repair or replace
Alternator	Open, grounded, or shorted coil Terminal insulator missing Diode faulty	Replace Repair Replace
Transistor regulator	Transistor regulator faulty	Replace regulator

(2) Battery charge insufficient and discharge occurs easily

Problem	Cause	Corrective action
Wiring	Wiring shorted or loose, wiring thickness or length unsuitable	Repair or replace Replace
Generator	Rotor coil layer short Stator coil layer short; One phase of stator coil open Slip ring dirty V-belt loose Brush contact faulty Diode faulty	Replace Replace Clean or polish Retighten Repair Replace

(3) Battery overcharged

Problem	Cause	Corrective action
Battery	Electrolyte low or unsuitable	Add distilled water Adjust specific weight Replace
Transistor regulator	Regulator transistor shorted	Replace regulator.

(4) Current charge unstable.

Problem	Cause	Corrective action
Wiring	Wiring shorted at a break in the covering due to hull vibration or intermittent contact at break	Repair or replace
Alternator	Layer short Balance spring damaged Slip ring dirty Coil open	Replace Replace Replace Repair or replace

5. Alarm Circuit

5-1 Oil pressure alarm

If the engine oil pressure is below 0.5 ±0.1 kg/cm², with the main switch in the ON position, the contacts of the oil pressure switch are closed by a spring, and the lamp is illuminated through lamp → oil pressure switch → ground circuit system. If the oil pressure is normal, the switch contacts are opened by the lubricating oil pressure and the lamp remains off.

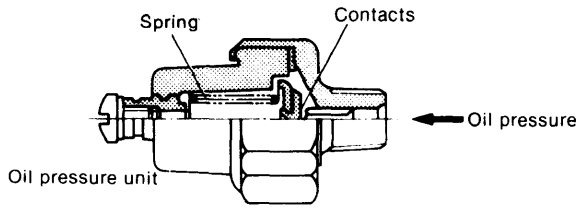

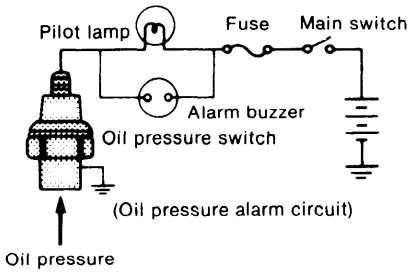

Oil pressure unit specifications

Rated voltage	12 V
Operating pressure	0.5 ±0.1 kg/cm² (5.688 ~ 8.532 lb/in.²)
Lamp capacity:	3W

Inspection

Problem	Inspection item	Inspection method	Corrective action
Lamp not illuminated when main switch set to ON	1. Oil pressure lamp blown out	(1) Visual inspection (2) Lamp not illuminated even when main switch set to ON position and terminals of oil pressure switch grounded	Replace lamp
	2. Operation of oil pressure switch	Lamp illuminates when checked as described in (2) above	Replace oil pressure switch
Lamp not extinguished while engine running	1. Oil level low	Stop engine and check oil level with dipstick	Add oil
	2. Oil pressure low	Measure oil pressure	Repair bearing wear and adjust regulator valve
	3. Oil pressure faulty	Switch faulty if abnormal at (1) and (2) above	Replace oil pressure switch
	4. Wiring between lamp and oil pressure switch faulty	Cut the wiring between the lamp and switch and wire with separate wire	Repair wiring harness

5-2 Cooling water temperature alarm

A water temperature lamp and water temperature gauge, backed up by an alarm in the instrument panel, are used to monitor the temperature of the engine cooling water. A high thermal expansion material is set on the end of the water temperature unit. When the cooling water temperature reaches a specified high temperature, the contacts are closed, and an alarm lamp and buzzer are activated at the instrument panel.

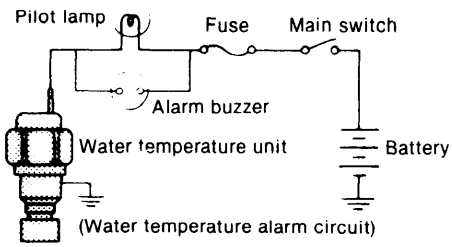

Water temperature switch

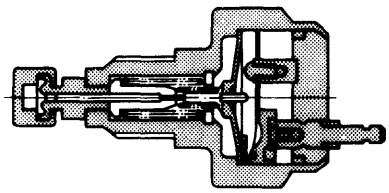

Operating temperature		Current capacity	Indication color	Parts code	Applicable model
ON	OFF				
95±3°C	90±3°C	DC12V.7A	Green	123682—91340	2QM20Y/3QM30Y 2QM20F/3QM30F
60±2°	56±2°C	DC12V.7A	Yellow	46150—004530	2QM20/3QM30 2QM20H/3QM30H

Pilot lamp: 12V, 3W
Alarm buzzer: 12V, 1W

The parts of the alarm circuit which must be checked are the open pilot bulb, fuse, and wiring. To check, disconnect the wiring at the water temperature unit side and ground the cord—the pilot lamp is normal if the pilot lamp illuminates. Moreover, be sure the check the color of the code after replacing.

5·3 Alarm buzzer

The alarm buzzer sounds when the engine oil pressure, cooling water temperature, or charging becomes abnormal. The trouble source is indicated by illumination of the appropriate alarm lamp simultaneously with the sounding of the buzzer.

Type	WI1-02
•Voltage	10 ~ 15V
Current drain	100mmA
Sound level	75dB(A) at 1m
Weight	0.2kg

Part No: 104271-91350

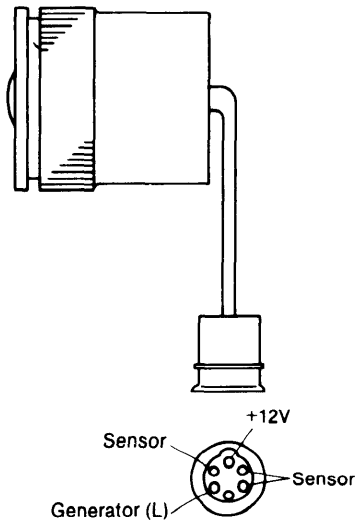

Normal operation is as follows:

	Alarm buzzer	Charge lamp	Oil pressure lamp	Water temperature lamp
Main switch ON, engine stopped	Alarm	Illuminated	Illuminated	Extinguished
Main switch ON, engine running	No alarm	Extinguished	Extinguished	Extinguished
Key switch OFF, engine stopped	No alarm	Extinguished	Extinguished	Extinguished

5-4 Tachometer

A tachometer that monitors ring gear speed and converts it to frequency to operate the meter is optional.

(1) Operating circuit

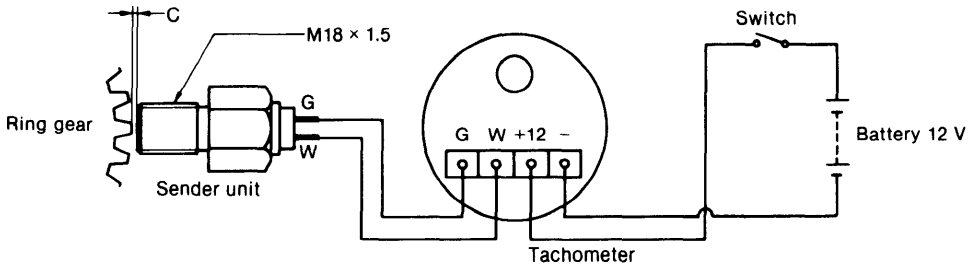

	Sender unit	Tachometer
Yanmar No.	124070-91160	104571-91100
VDO (West Germany) Part No.	340.804/007/007	430.230/019/001

(2) Sender unit sensitivity limits

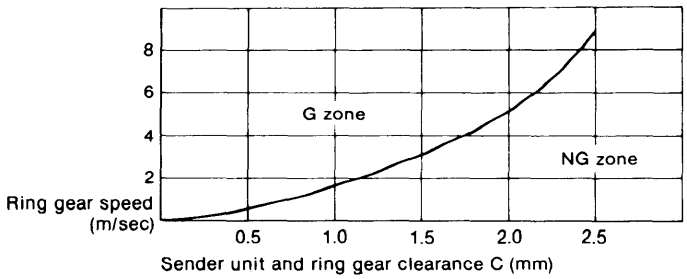

No. of ring gear teeth	126
Module	2.54
Tachometer frequency	7350Hz

(3) Alternator LR155-04 (Option)

The R terminal of the alternator can be used. Refer to Chapter 10 para. 4.6.

NOTE: Confirm the number of tachometer electrodes.

Wiring example

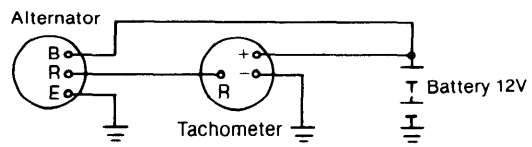

CHAPTER 12

INSTALLATION AND FITTING

1. Propeller Selection 12-1
2. Engine Installation 12-4
3. Stern Equipment 12-17
4. Interior Piping and Wiring 12-21
5. Front Power Take-Off 12-27

1. Propeller Selection

1-1 Criteria for matching

When determining whether the propeller matches the operating requirements, the crankshaft rpm must be taken into consideration:

(1) 2QM20(H)

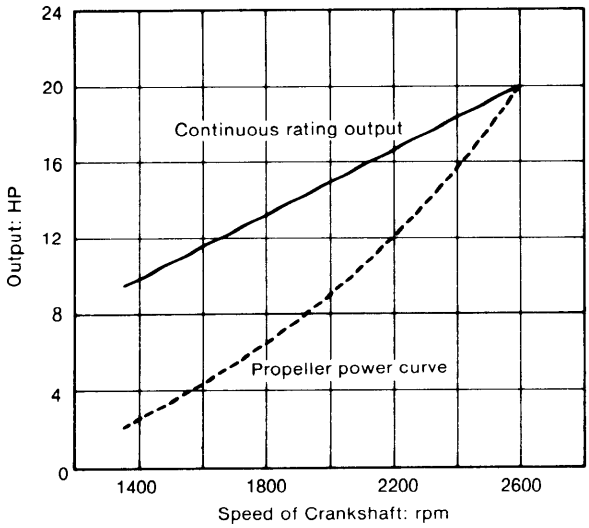

(2) 3QM30(H)

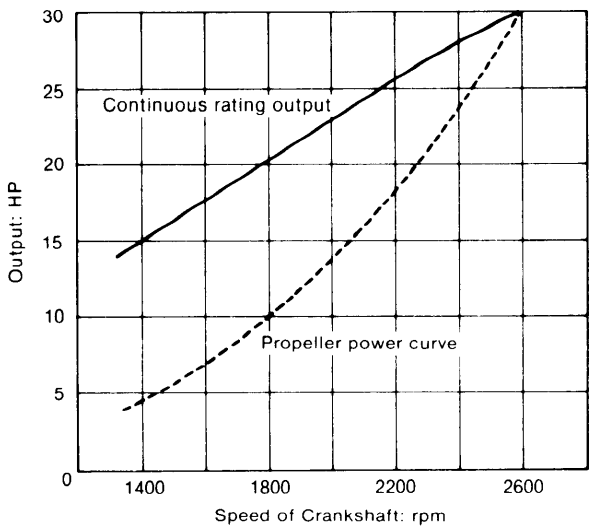

1-2 Propeller selection and shaft diameter

1-2.1 Calculating vessel displacement

Since displacement represents the weight of the vessel, the vessel weight expresses the weight of the displaced water.

Calculating displacement by adding the weights of each part of the vessel is the most accurate method.

Hull weight	W1 (ton)
Engine	W2
Stern propeller	W3
Fuel, lubricating oil	W4
Battery	W5
Fishing gear	W6
Front power take-off	W7
Crew	W8
Other fittings	W9

Displacement Δ = W1 + W2 ... + W9

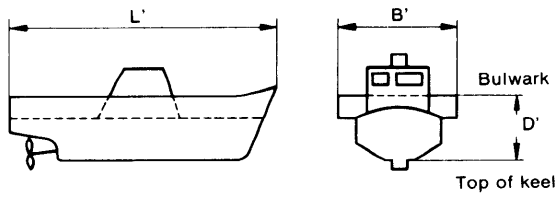

L' : Overall length (m)
B' : Maximum breadth(m)
D' : Overall depth(m)

NOTES: (1) Check the hull weight with the hull manufacturer or shipyard, or when unknown, calculate a criteria with the following equation.

- *Light FRP vessel*
  $W_1 = L'_m \times B'_m \times D'_m \times (0.06CN' \sim 0.09)$ *ton.*
- *Heavy FRP vessel or wood vessel*
  $W_1 = L'_m \times B'_m \times D'_m \times (0.09 \times 0.12)$ *ton.*

Note that when D' is especially large because of a bulwark, et., CN' will be 0.045 ~ 0.08

(2) The displacement may also be calculated from L, B, and D, but since the error is large for small vessels it should not be used.

1-2.2 Propeller and shaft diameter

(1) Propeller diameter and pitch

mm (in.)

Model	Reduction ratio	Diameter	Pitch
2QM20	2.20	430 (17)	300 (12)
	3.21	530 (21)	300 (12)
2QM20H	2.14	430 (17)	300 (12)
	2.83	510 (20)	360 (14)
3QM30	2.20	460 (18)	330 (13)
	3.21	580 (23)	430 (17)
3QM30H	2.03	460 (18)	300 (12)
	3.00	560 (22)	410 (16)

NOTE: Standard propeller is of integrated 3-blades type, manganese bronze with an area ratio of 0.36.

(2) Propeller shaft diameter

mm (in.)

Model	Reduction ratio	Stainless steel
2QM20	2.20	28 (1.10)
	3.21	30 (1.18)
2QM20H	2.14	28 (1.10)
	2.83	30 (1.18)
3QM30	2.20	30 (1.18)
	3.21	34 (1.34)
3QM30H	2.03	30 (1.18)
	3.00	34 (1.34)

1-3 Propeller shaft coupling

(1) 2QM20(H)

1) Solid type

mm (in.)

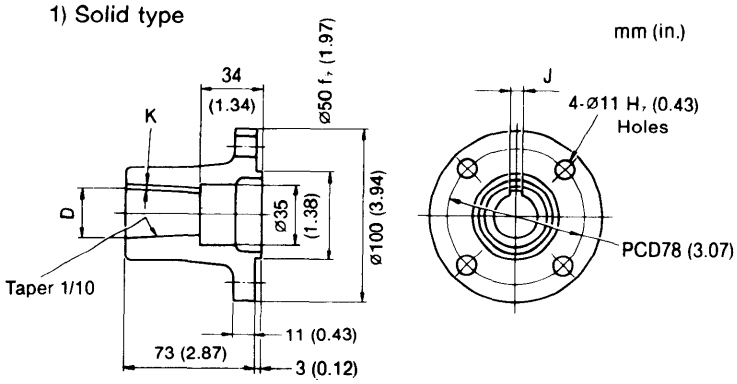

mm (in.)

Model	Clutch	Reduction ratio	D	K	J
2QM20	YP7M	2.20	ø28±0.1 (1.098~1.106)	3.5 (0.14)	7H7 (0.28)
		3.21	ø30±0.1 (1.177~1.185)	4 (0.16)	10H7 (0.39)
2QM20H	KBW10	2.14	ø28±0.1 (1.098~1.106)	3.5 (0.14)	7H7 (0.28)
		2.83	ø30±0.1 (1.177~1.185)	4 (0.16)	10H7 (0.39)

2) Slit type

mm (in.)

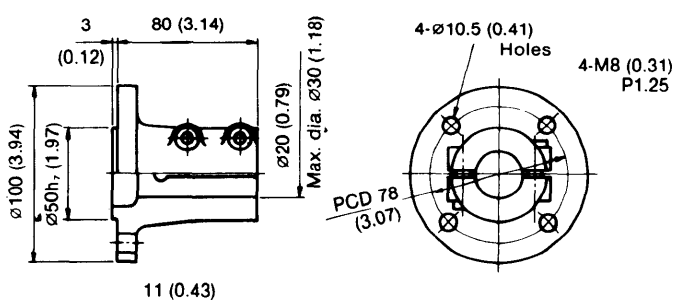

(2) 3QM30(H)

1) Solid type

mm (in.)

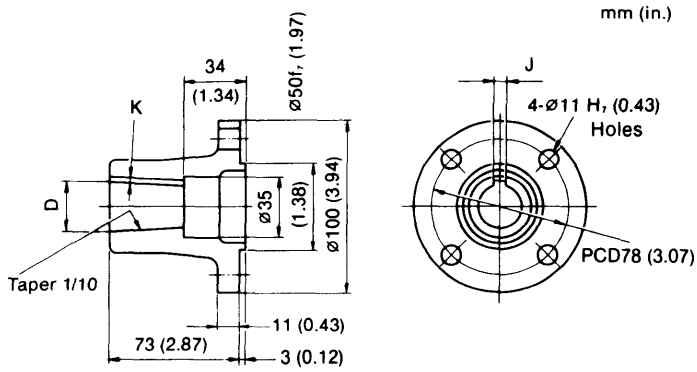

mm (in.)

Model	Clutch	Reduction ratio	D	G	L
3QM30	YP10M	2.20	ø30±0.1 (1.177~1.185)	ø35 (1.38)	35 (1.38)
		3.21	ø34 $^{0}_{-0.2}$ (1.331~1.339)	ø42 (1.65)	37 (1.46)
3QM30H	KH18	2.03	ø30±0.1 (1.177~1.185)	ø35 (1.38)	35 (1.38)
		3.00	ø34 $^{0}_{-0.2}$ (1.331~1.339)	ø42 (1.65)	37 (1.46)

2) Slit type

mm (in.)

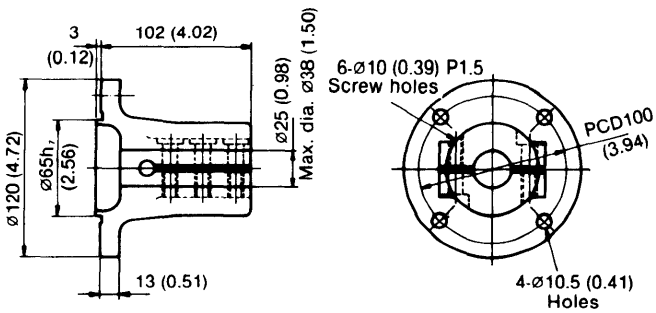

1-4 Propeller shaft and stern tube

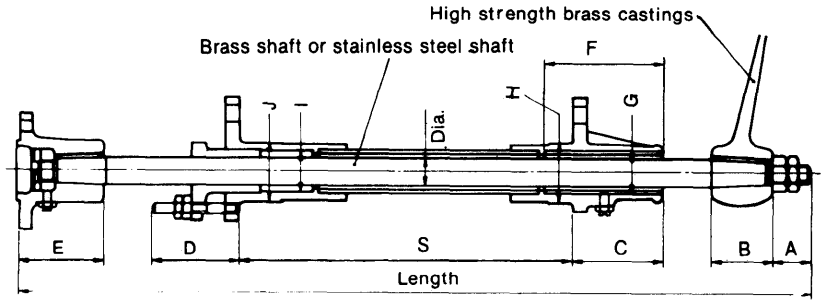

mm (in.)

Model	Dia.	Length	S (standard)	A	B	C	D	E	F	G	H	I	J
2QM20(H)	28 (1.10)	2400 (94.49)	650 (25.59)	40 (1.57)	60 (2.36)	80 (3.15)	75 (2.95)	73 (2.87)	110 (4.33)	41 (1.61)	56 (2.20)	41 (1.61)	56 (2.20)
2QM20(H)G	30 (1.18)	2400 (94.49)	650 (25.59)	39 (1.54)	60 (2.36)	95 (3.74)	72 (2.90)	73 (2.87)	120 (4.72)	46 (1.81)	60 (2.36)	46 (1.81)	60 (2.36)
3QM30(H)	30 (1.18)	2400 (94.49)	650 (25.59)	39 (1.54)	60 (2.36)	95 (3.74)	72 (2.90)	88 (3.46)	120 (4.72)	46 (1.81)	60 (2.36)	46 (1.81)	60 (2.36)
3QM30(H)G	34 (1.34)	2400 (94.49)	650 (25.59)	44 (1.73)	65 (2.56)	110 (4.33)	72 (2.90)	88 (3.46)	140 (5.51)	50 (1.97)	64 (2.52)	50 (1.97)	64 (2.51)

2. Engine Installation

2-1 Engine room

The overall layout of the engine room is planned for easy inspection, servicing and handling of the engine, front power take-off and auxiliary machinery.
Do not overlook the position and space of the fuel tank, battery and Kingston cock and their related piping, wiring and remote control cables in the engine room layout. Thoroughly study all the equipment and apparatuses to be installed, and consult the shipyard and make a paper plan to provide optimum engine room space.
The engine room conditions required to handle the engine will be covered below.

(1) Ventilation inside engine room
Since an increase in the engine room temperature causes a reduction in the intake air volume and thus a drop in engine output, ventilation inside the engine room must be ample.
- Dimensions and capacity with a ventilator installed
- Dimensions and capacity with an intake duct installed

(2) Engine room height
The distance from the lubricating oil inlet at the top of the rocker arm cover to the ceiling must be great enough that lubricating oil can be easily added.

(3) Space must be sufficient to move the propeller shaft flange face toward the stern when disassembling the clutch, changing the gear, etc.

2-2 Engine bed

(1) Although the installation angle of the engine differs with the hull shape and engine installation position, it must be 8° or less when the vessel is cruising. If the tilt exceeds 8°, the output will decrease, the exhaust color will worsen without the speed rising, vessel speed will fall or the parts will wear abnormally, and oil comsumption will increase.

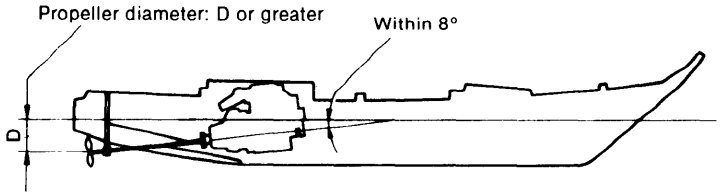

(2) From the engine installation surface, the shape of the bottom must be such that there is no contact, as in the figure.

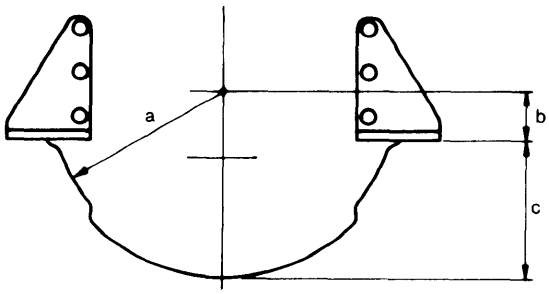

Mounting Area Cross Section

mm (in.)

	2QM20/20QM20Y	2QM20H/2QM20F	3QM30/3QM30Y	3QM30H/3QM30F
a	190 (7.48)	190(7.48)	190 (7.48)	190 (7.48)
b	52 (2.04)	52 (2.04)	52 (2.04)	52 (2.04)
c	178 (4.96)	138 (5.43)	176 (6.93)	195 (7.68)

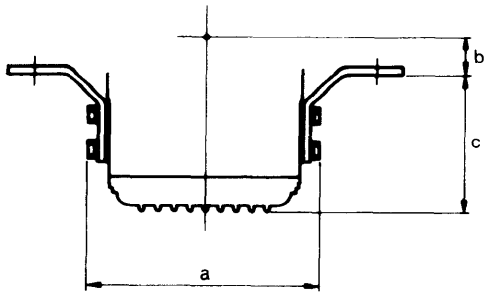

Oil Pan Area Cross Section

mm (in.)

	2QM20/2QM20Y	2QM20H/2QM20F	3QM30/3QM30Y	3QM30H/3QM30F
a	292 (11.49)	292 (11.49)	292 (11.49)	292 (11.49)
b	52 (2.04)	52 (2.04)	52 (2.04)	52 (2.04)
c	168 (6.61)	168 (6.61)	174 (6.85)	174 (6.85)

(3) Sufficient space must be available for easy setting of the wrench to the reamer bolt on the propeller shaft joint.
(4) The bed must be constructed so that a wrench can be set at the bottom of the engine base to retighten the engine mounting bolts.
(5) Make the bed such that the propeller shaft and engine drive shaft are in a straight line.

2-3 Engine installation angle

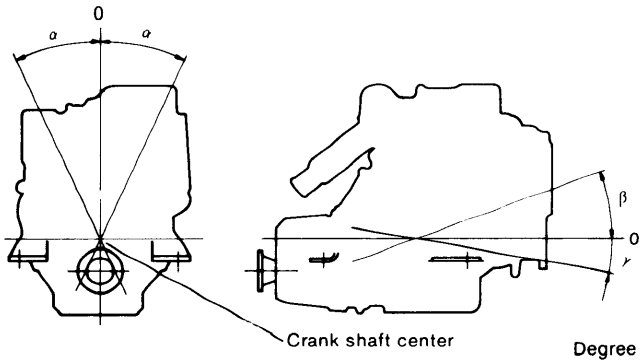

Degree

Angle	Inclination under operation		Allowable installation angle (max.)
	Constant	Peak	
α	25	40	—
β	20	35	13
γ	10	15	5

2-4 Dimensions

2-4.1 2QM20

mm (in.)

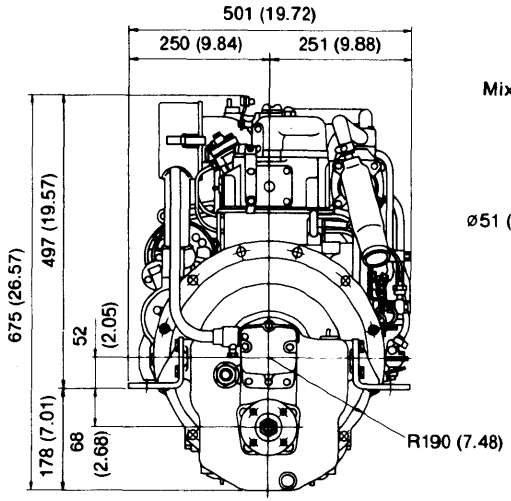

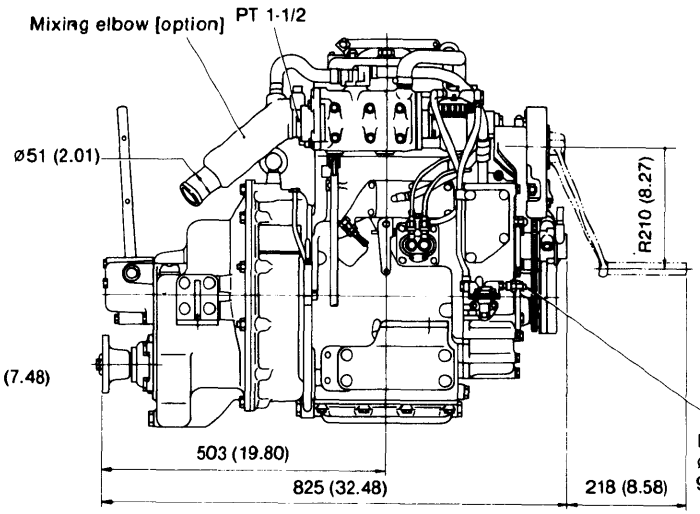

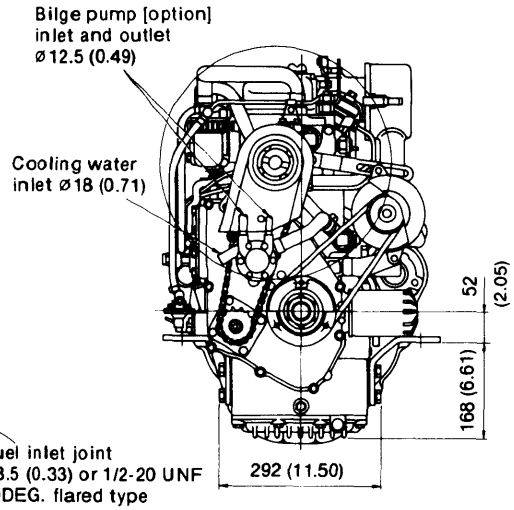

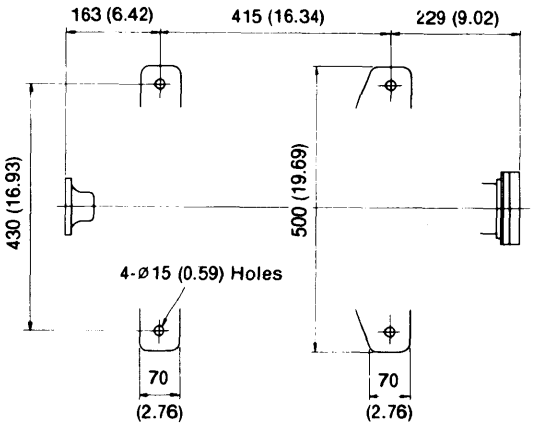

2-4.2 2QM20B

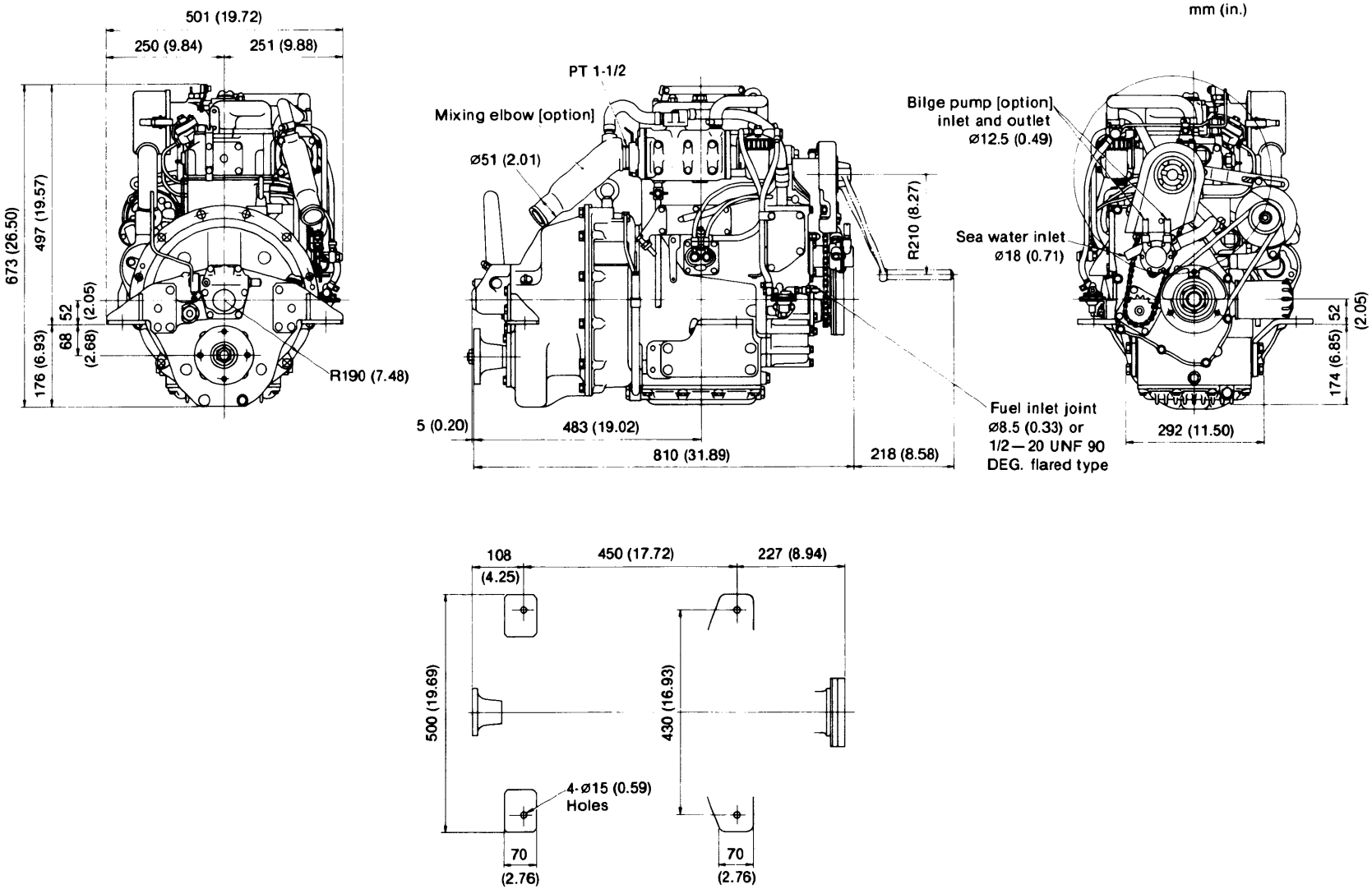
mm (in.)
501 (19.72)
250 (9.84)
251 (9.88)
673 (26.50)
497 (19.57)
176 (6.93)
68
(2.68)
52
(2.05)
R190 (7.48)
PT 1-1/2
Mixing elbow [option]
ø51 (2.01)
R210 (8.27)
5 (0.20)
483 (19.02)
810 (31.89)
218 (8.58)
Bilge pump [option]
inlet and outlet
ø12.5 (0.49)
Sea water inlet
ø18 (0.71)
Fuel inlet joint
ø8.5 (0.33) or
1/2—20 UNF 90
DEG. flared type
292 (11.50)
174 (6.85)
52
(2.05)
108
(4.25)
450 (17.72)
227 (8.94)
500 (19.69)
430 (16.93)
4-ø15 (0.59)
Holes
70
(2.76)
70
(2.76)

2-4.3 3QM30

mm (in.)

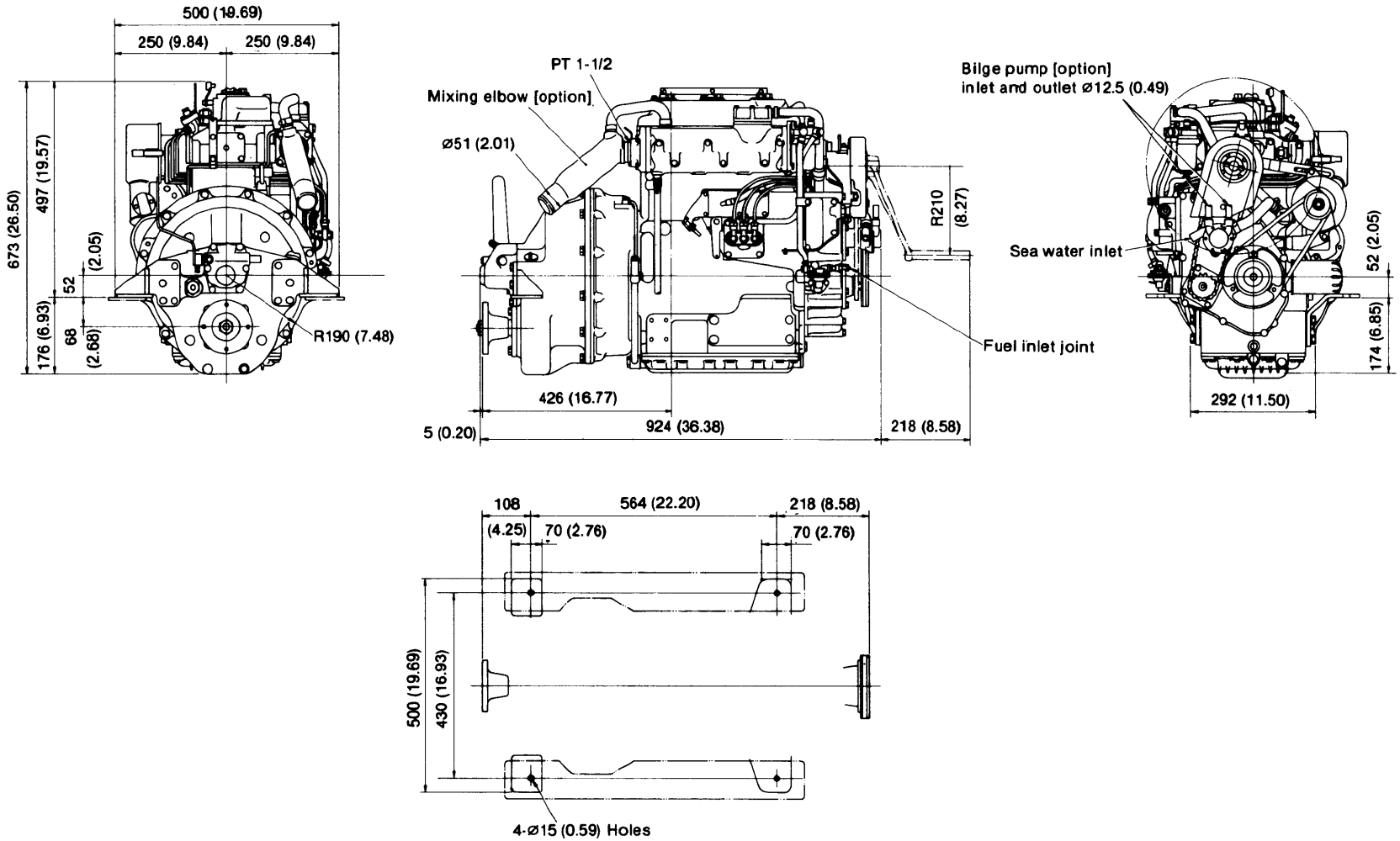

2-4.4 2QM20H

mm (in.)

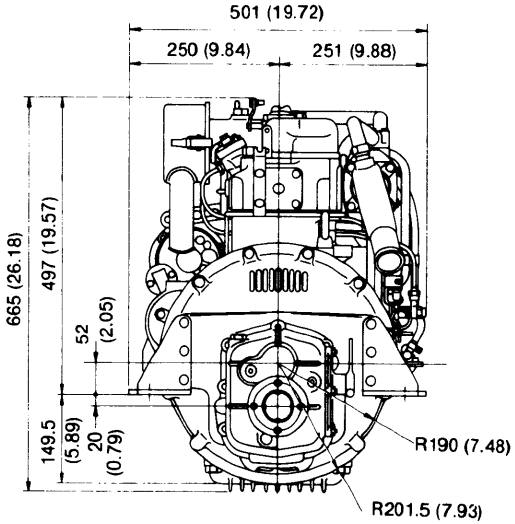

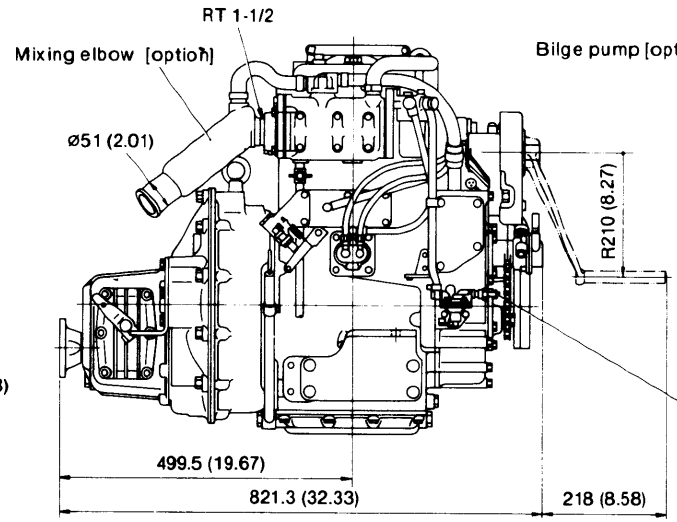

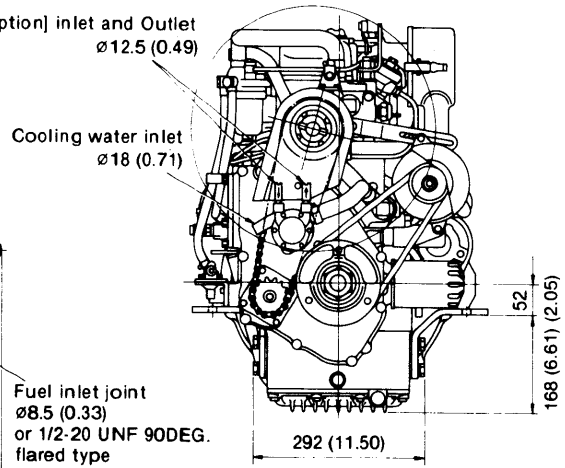

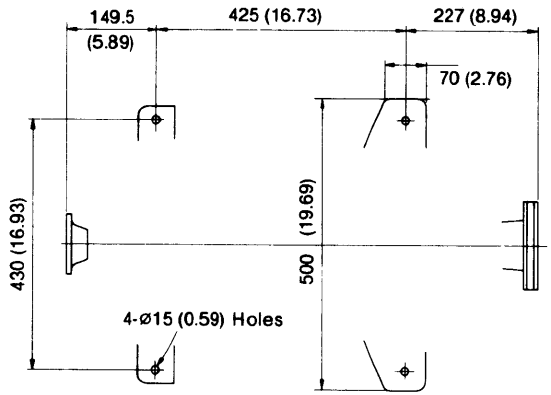

2-4.5 3QM30H

mm (in.)

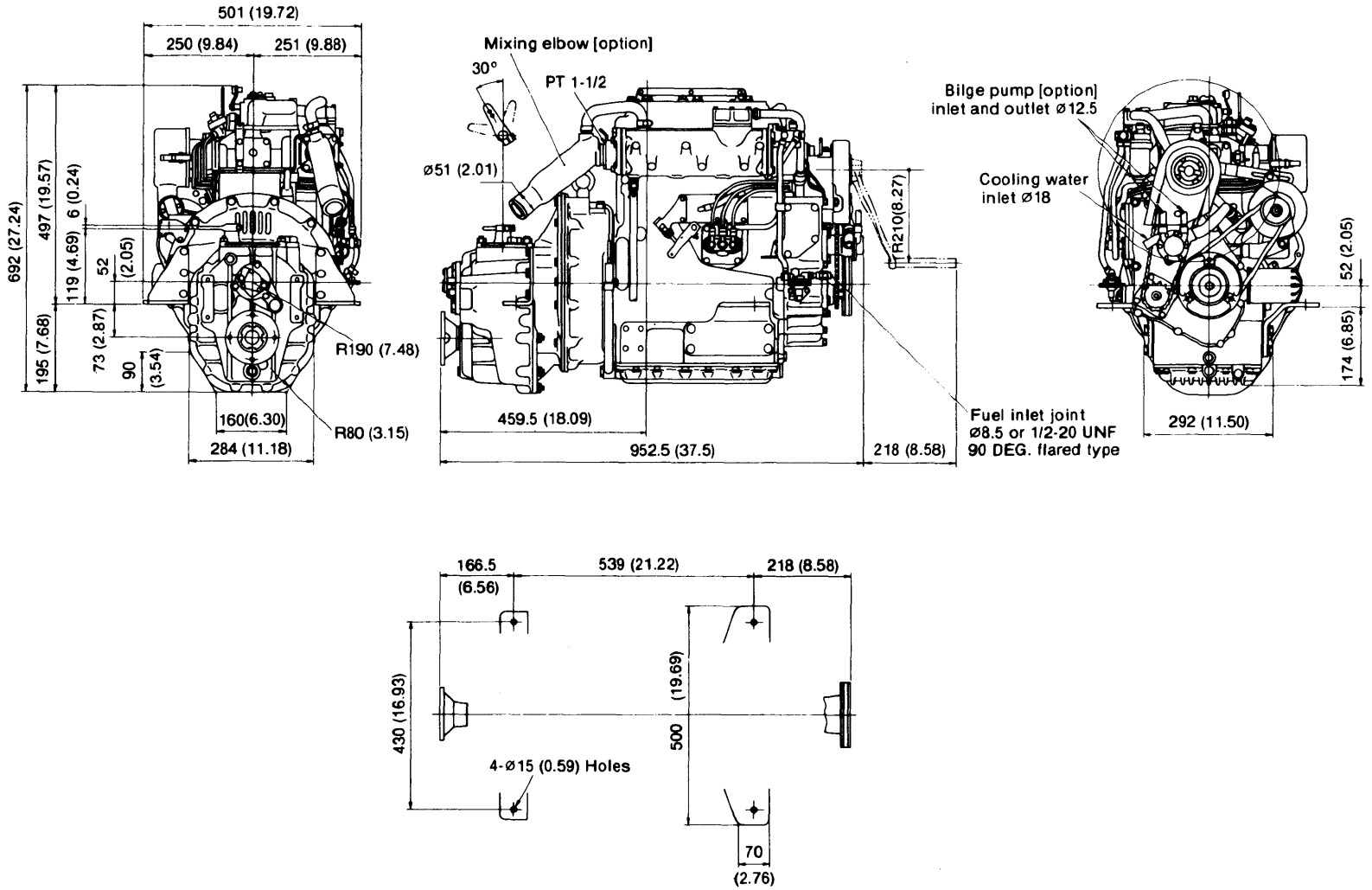

2-4.6 2QM20Y

mm (in.)

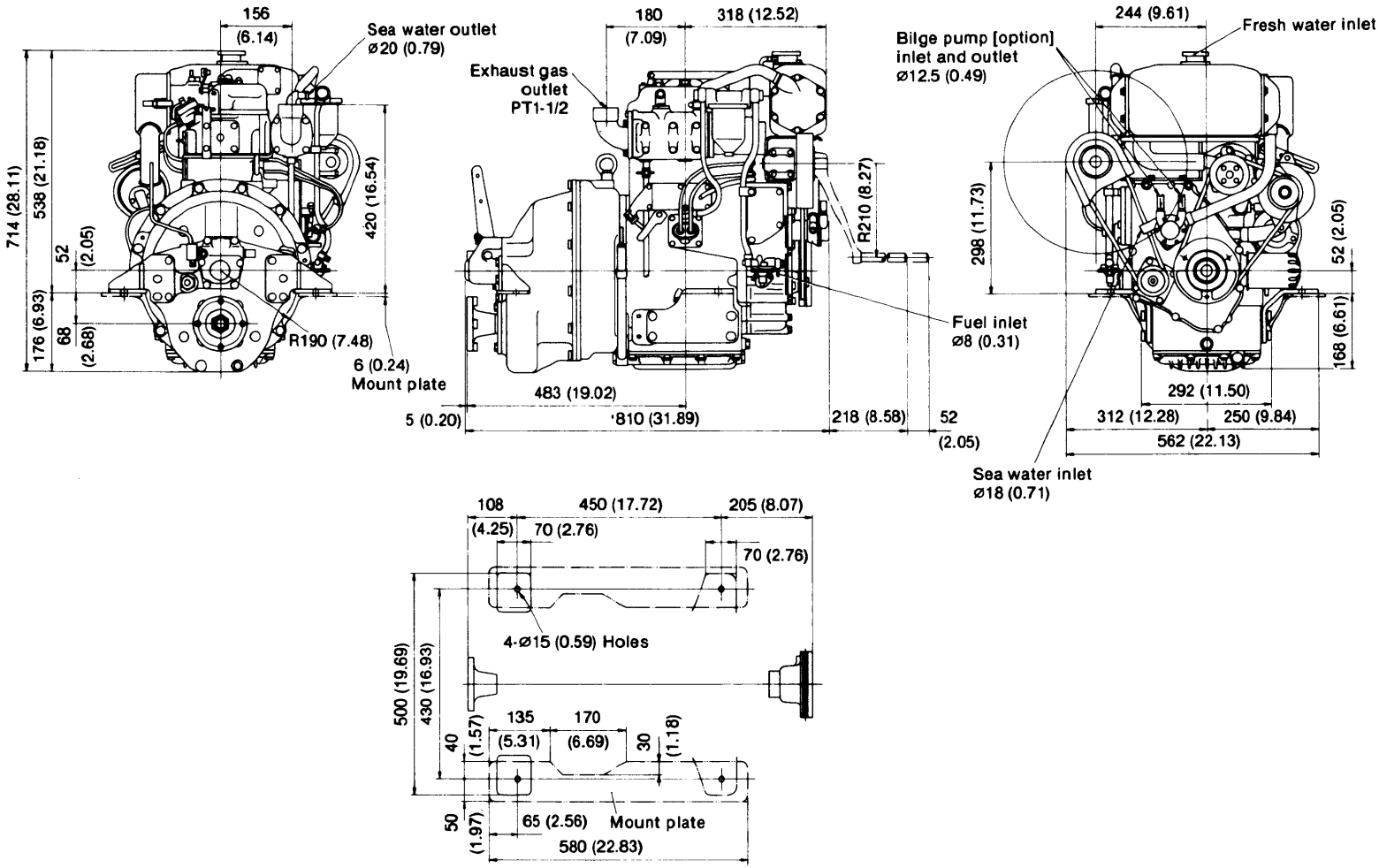

2-4.7 3QM30Y

mm (in.)

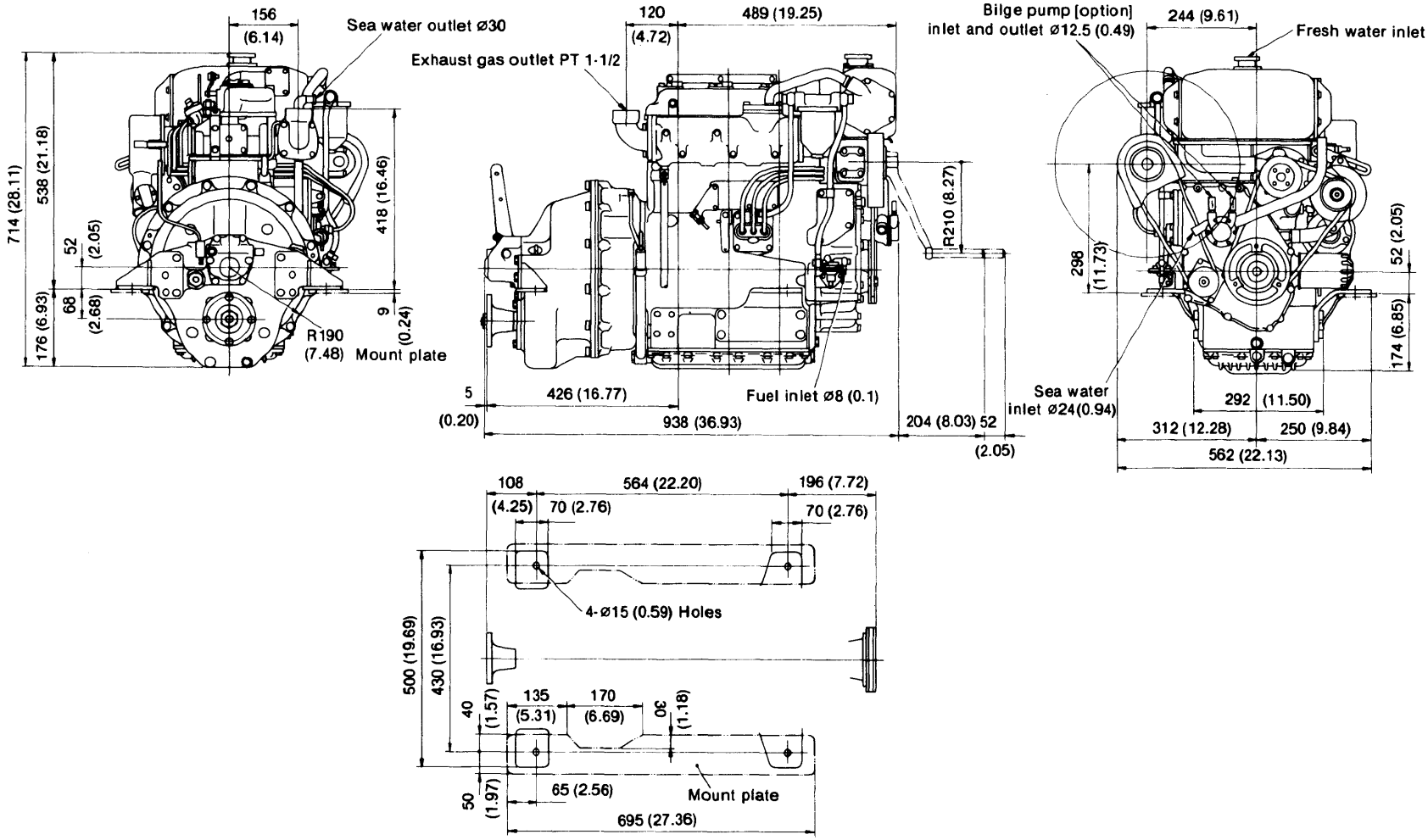

2-4.8 2QM20F

mm (in.)

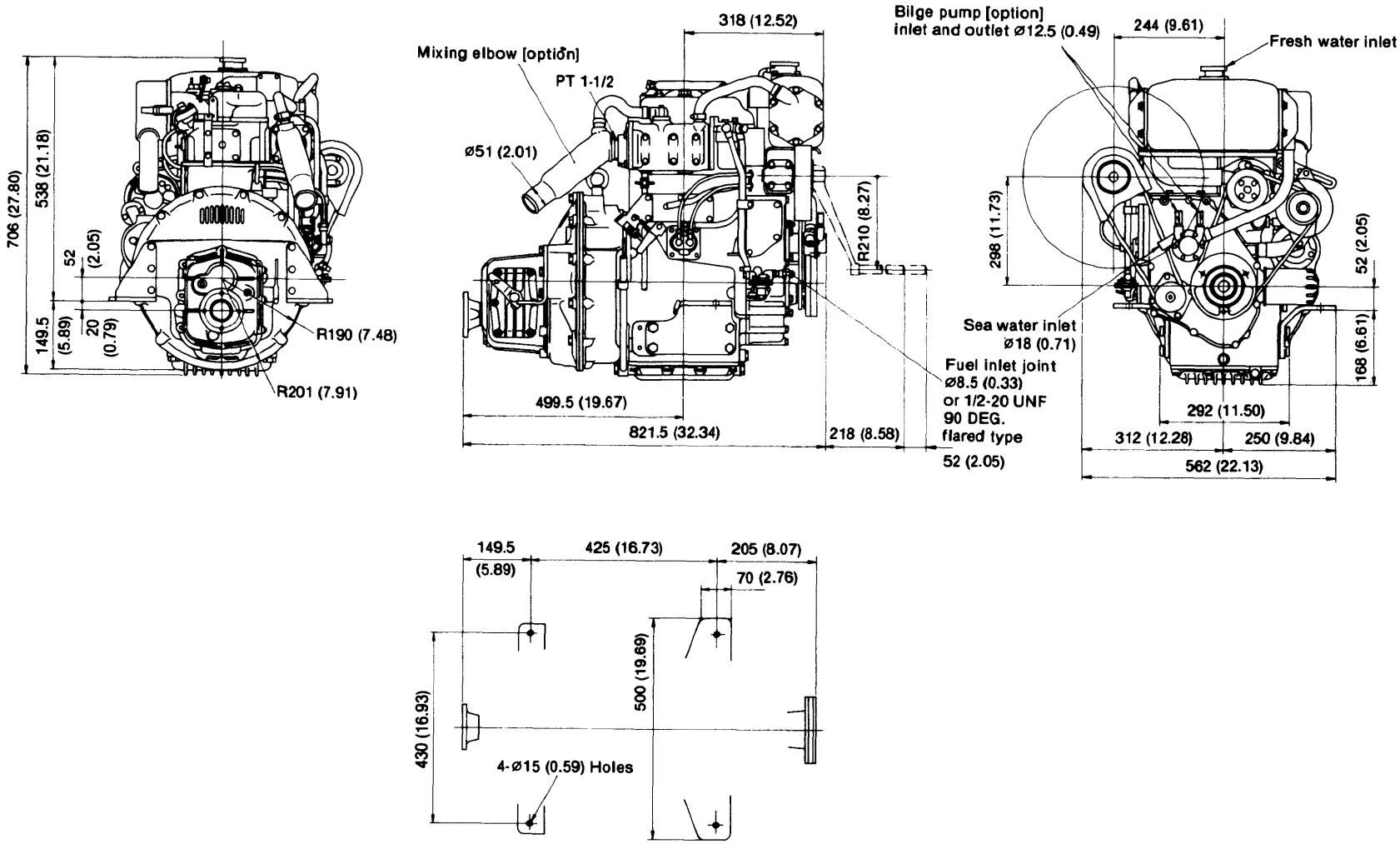

2-4.9 3QM30F

mm (in.)

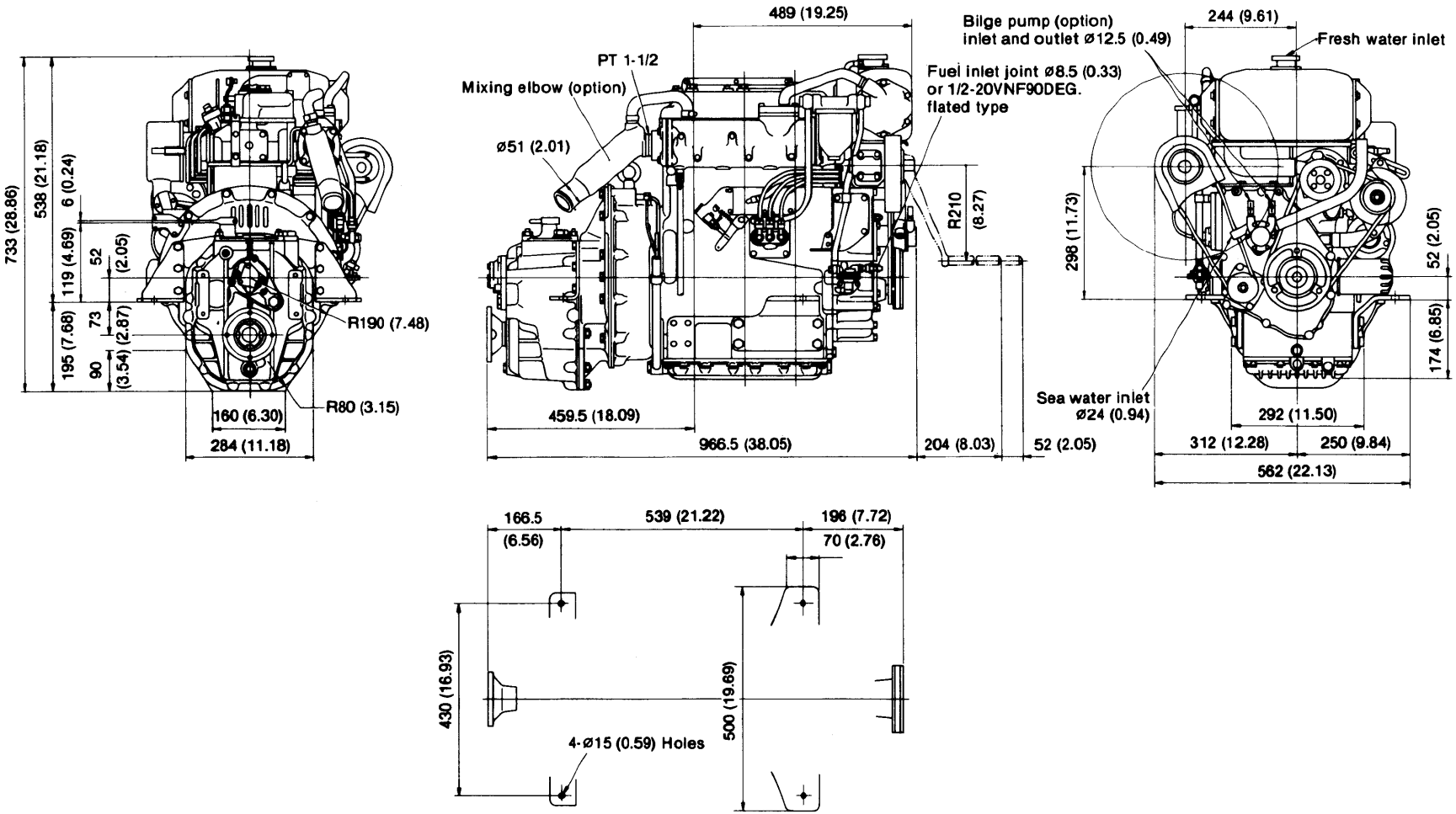

2-5 Engine installation method

2-5.1 Fixed installation

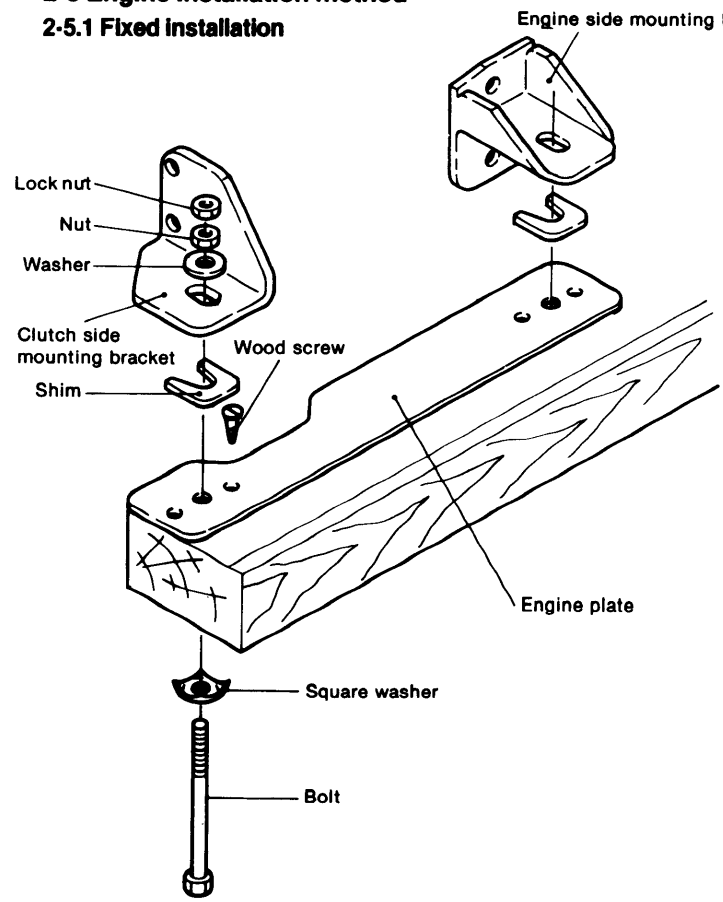

(1) If the engine bed is made of wood, use a steel engine plate and securely attach it to the engine bed with wood screws.
Machine the engine so that the engine plate and engine bed contact securely.

(2) Bite into the wood on the mounting bolt hull side by using a square washer with a width of at least 5 times the diameter of the mounting bolt.
Mounting bolt size: M12 ~ M14

(3) Adjust the shim between the engine plate and mounting bracket so that the propeller shaft and drive shaft are in a straight line.
Shim thickness: 0.2 ~ 1.0mm

(4) Tighten the mounting bolts uniformly. The bolts must not be tightened excessively at one side even when not centered. Two mounting nuts should be used so that there is no chance of the nuts working loose.

2-5.2 Flexible mounting

(1) Adjustable type flexible mounting

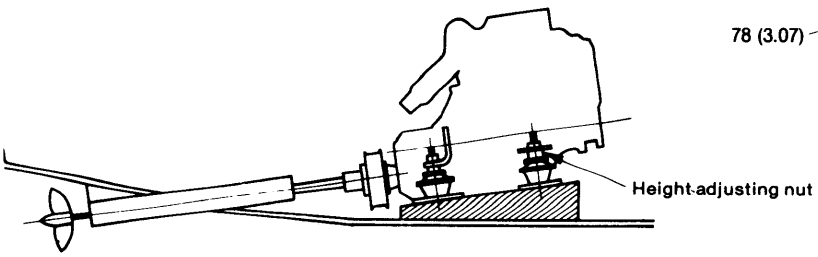

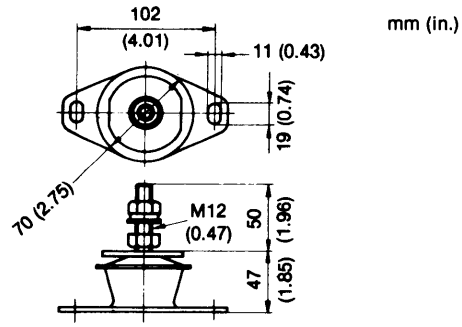

(2) Fixed type flexible mounting

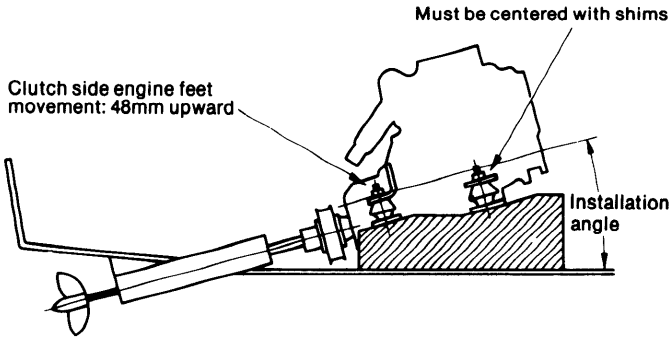

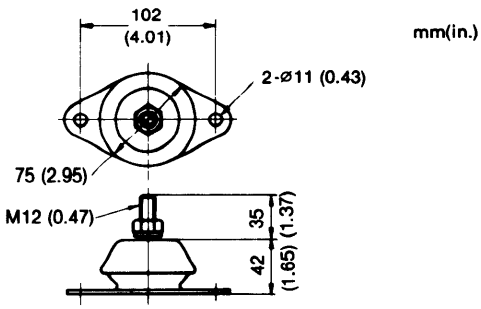

(3) Flexible coupling
When the engine is installed with flexible mountings a flexible coupling must always be used at the propeller shaft coupling.

NOTE: Install only after the drive shaft coupling and propeller shaft coupling have been centered.

1) 2QM20 (H)

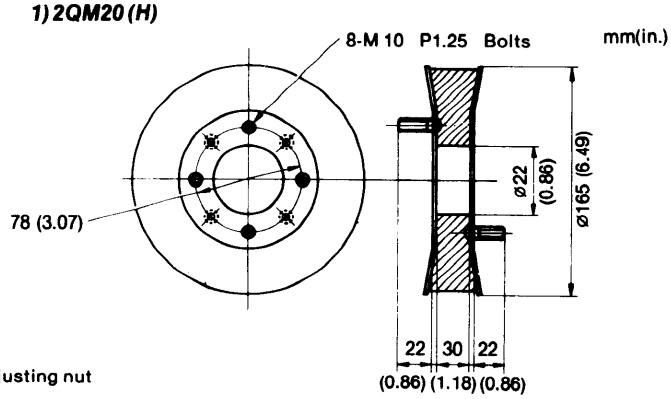

Flexible coupling (option)

2) 3QM30 (H)

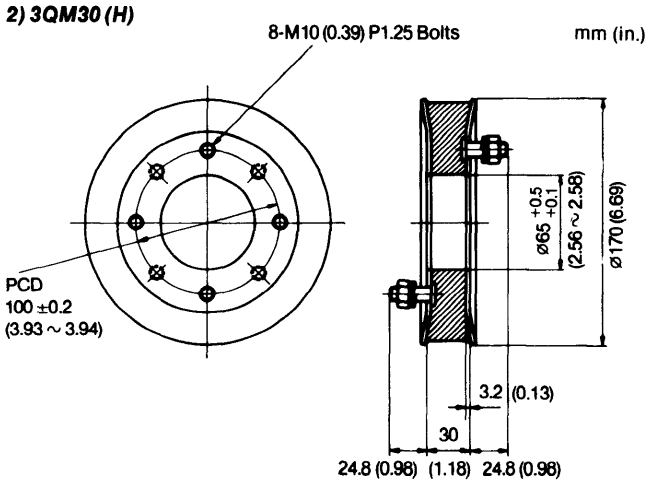

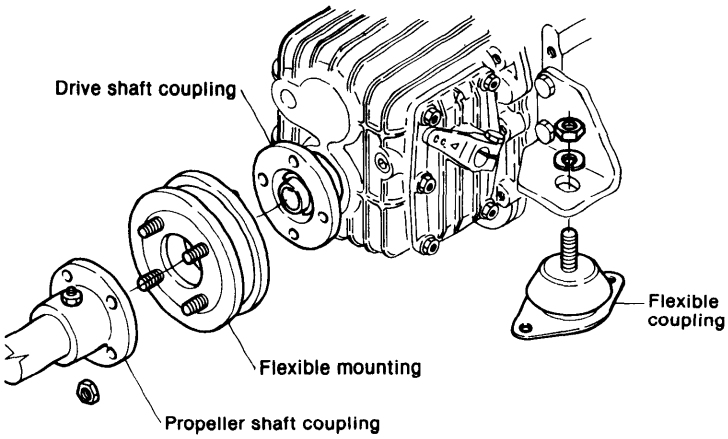

2-6 Centering

2-6.1 Coupling mating face measurement

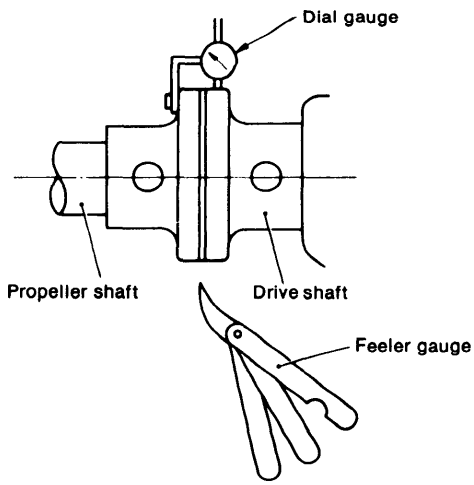

Before installing the propeller shaft in the engine (intermediate shaft when there is an intermediate shaft), make sure that the couplings of both shafts are centered When the center of the engine is too high, adjust by cutting the engine bed, and when the engine is too high, adjust by inserting plates.

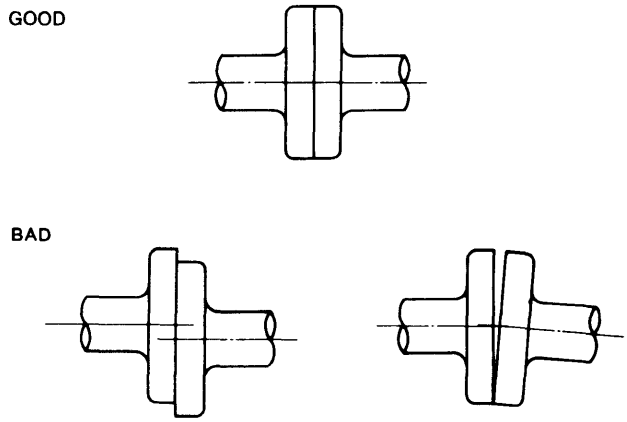

(1) Install a dial gauge on the propeller shaft coupling and measure the circumference versus drive shaft coupling center run-out (at four equally spaced points around the circumference).

(2) Then lock the drive shaft, turn the propeller shaft and dial gauge, and measure the outside periphery of the drive shaft and adjust to the value measured at (a) above.

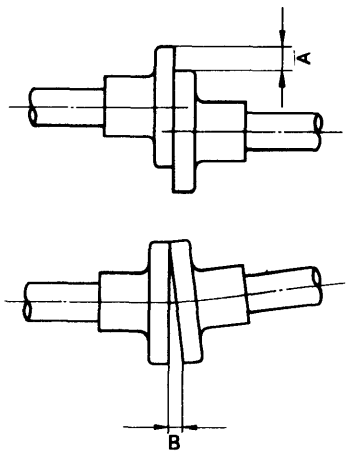

Coupling misalignment A	0.05 mm or less (0.002in.)
Coupling face run-out	0.2 mm or less (0.0079in.)

2-6.2 After launching the vessel, check whether the drive shaft and propeller shaft are aligned.

3. Stern Equipment

3-1 Stern tube installation

The bearing at the point at which the stern equipment passes through the hull is called the stern tube. The propeller shaft is supported by inserting lignumvitae (wood), cutless bearing (rubber) and other support materials. The propeller shaft is inserted into the stern tube and the bow end is connected to the intermediate shaft or drive shaft, while the propeller shaft is installed in the stern end taper.

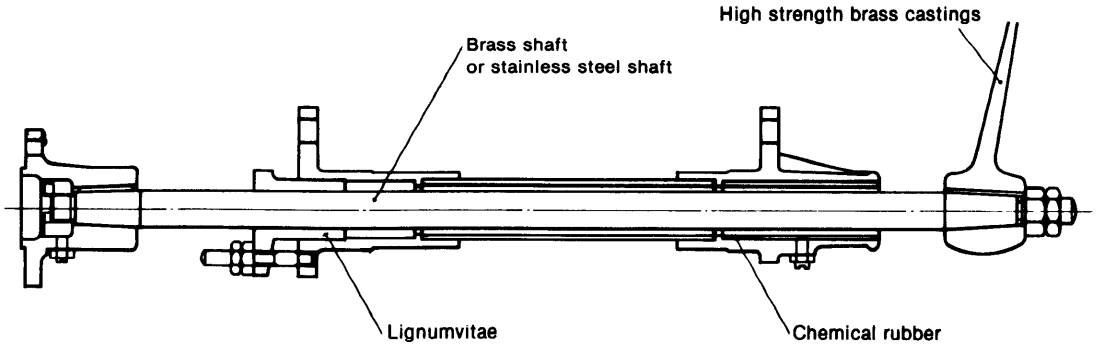

3-1.1 Initial drilling

Bore a 30 ~ 40 mm diameter temporary hole smaller than the stern tube through the hull as shown in the drawing

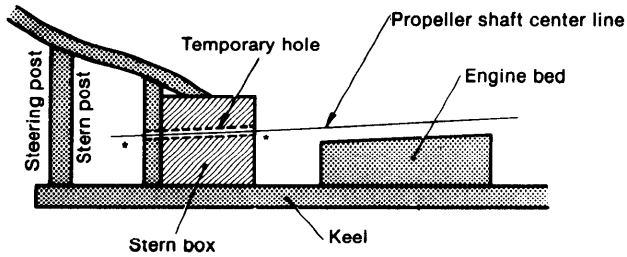

* Set the hole center, than drill

3-1.2

Passing the centering line through the temporary hole
Pass the centering line through the temporary hole and fasten one end to the steering post and the other end to the engine room wall as shown below (The line should be tight.)

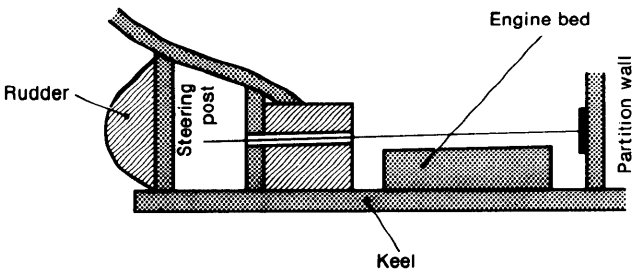

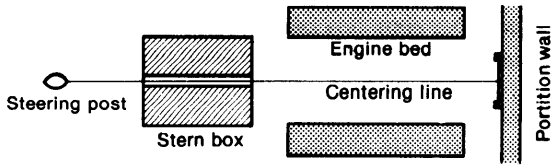

Make a parallel-cross frame (below) and attach it to the engine room wall. Then insert plate A, which carries the centering line, so that it is movable in all directions to allow correction of the line's position.
Fasten the line as illustrated in below [b] for easy removal. The empty hole in plate A (after the line is removed) permits pencil marking-off or center peep.

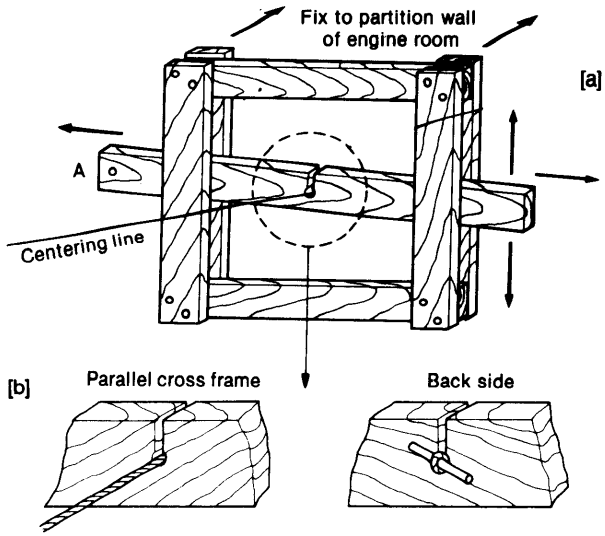

3-1.3 Centering

Measure the dimensions between various points and the centering line and set the temporary position of the engine in accordance with the dimensions given in the drawing.

(1) Measure the dimension between the centering line and the top of the engine bed to determine the installation level and height of the crankshaft center line, then measure the clipping margins of the engine bed.
(2) Measure the dimensions between the centering line and the inside surface of the engine bed.
(3) At the flywheel and clutch, measure the dimensions between the centering line and the ship's bottom to check that the clutch case, engine oil pan, and flywheel clear the ship's bottom or sleepers.
(4) Then temporarily fix the centering line adjusting plate A.

NOTES: (1) Since centering based on the stern tube hole is performed on land, ample engine bed chipping allowances under the center line must be provided to allow for possible distortion after launching.
(2) If the flywheel, oil pan or clutch case contact the ship's bottom or any sleeper, raise the shaft center. However, in this case, the engine installation angle must be no more than 8°.
(3) The engine should be installed on as horizontal a plane as possible. Remember, propeller efficiency is highest when the engine is horizontal.

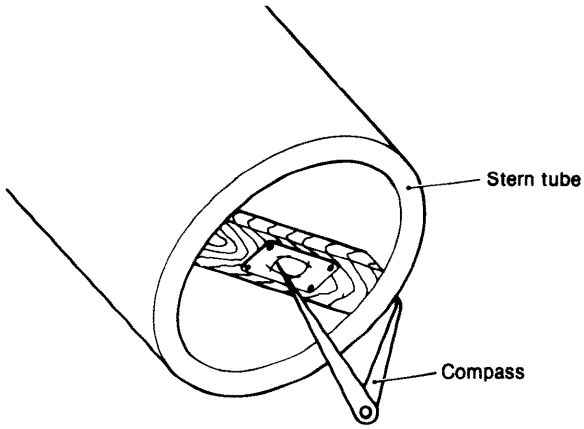

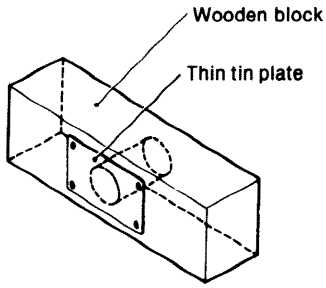

3-1.4 Final drilling

After temporary centering, mark off one stern tube hole on each side of the stern box based on the centering line, and then bore holes that exactly fit the stern tube (no play).

3-1.5 Stern tube installation

(1) Remove the centering line, but either leave the frame of parallel crosses or mark off its center position on the front wall of the engine room.
(2) Insert the stern tube, check for interference, and temporarily tighten.
(3) Centering for stern tube installation
1) Prepare a wooden block having a center hole covered with a thin tin plate.
Hammer the block into the propeller side of the stern tube, obtain the center point with a compass and then make a small hole at this point with a nail or the line. Pass one end of the centering line through the hole and fasten the other end to the empty hole in plate A (3-1 (b)).
Check that the centering line is at the center of the stern tube at the inside flange. If not, center by moving either the stern tube or the centering line.
2) When centering the propeller side of the stern tube, the use of a centering jig with various outside diameters that fit the stern tube (below) will prove very convenient.

NOTES: (1) The center deflection of the stern tube is 3 ~ 4 times greater at the front of the engine bed. Therefore, sufficient care must be exercised.
(2) If the stern tube holes are so large that stern tube play is excessive, tighten the stern tube to the correct position and mark that position so that the tube can be replaced correctly.

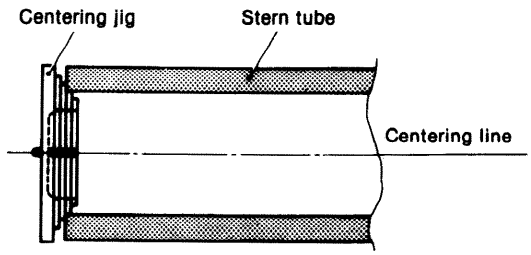

A tapered jig can be made for an infinite variety of stern tube inside diameters.

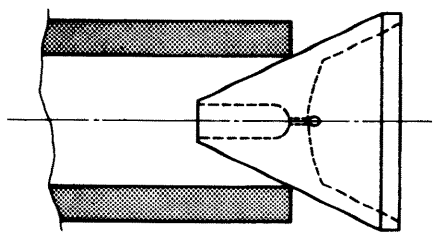

(4) Fitting of stern tube tightening surface
Pay careful attention to the rectangularity between the stern tube and stern tube tightening surface of the stern box when fitting.

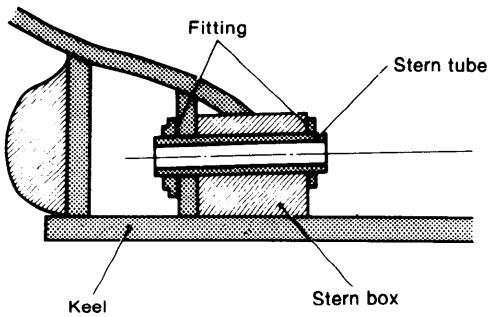

NOTE: If the stern tube and stern tube tightening surface of the stern box are not exactly rectangular, the stern tube will bend when tightened, causing overheating, seizing, abnormal lignumvitae wear and other troubles.

(5) Attaching the stern tube

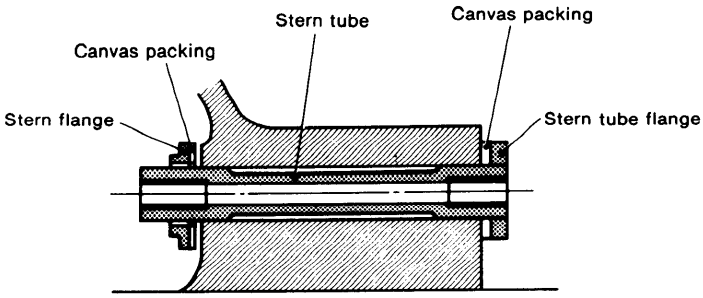

1) Paint the outside of the stern tube with rustpreventive paint.
2) Paint the stern tube flange and the surface of the stern box with white paint, and attach the canvas packings.
3) Install the stern tube.
4) Paint the outside of the stern post and the stern tube flange with white paint, and install the canvas packing and the sten flange.
Also paint the screw holes with white paint and tighten the screws.
5) Attach the clamp for the stern tube chemical rubber tube and install the fastening wire.
6) Drive in the coach screws to lock the inside and outside stern tube flanges and lock the stern flange nuts.

3-2 Propeller shaft installation

After fitting the stern tube packing gland to the propeller shaft, fit the propeller shaft to the stern tube by hand. Before fitting the propeller shaft to the stern tube, clean the interior of the stern tube and coat the lignumvitae with grease. When suspending the propeller shaft with a rope when inserting the shaft, the rope must not contact the rubber coil directly. Since propeller shaft insertion is performed at the narrowest part of the hull, be careful not to damage the brass coil and rubber coil. After inserting the propeller shaft, check the clearance between the stern tube and shaft while turning the shaft.

Insert the waterproof packing at the stern tube packing gland. Use braided string boiled in grease as the packing. Do not use a long coil, but rings cut one at a time, such as piston rings. When inserting the packing, the notches must alternate.

Tighten the packing uniformly while measuring the distance from the stern tube face to the gland face so that the packing gland is not tightened unevenly.

3-3 Propeller installation

(1) First, remove the shaft key, coat the shaft with red lead or bearing blue, fit the propeller shaft, and mark the position of the propeller on the brass coil. Then check the propeller shaft and propeller hole contact—if the contact is poor, correct. Poor contact and play during use will damage the key and key groove. After repairing, install the propeller and mark its position on the brass coil.
Then remove the propeller, insert the key on the shaft and fit and tighten the propeller. However, before this, check whether the marks made after repair match. If they do not, the key is touching and must be removed and cut.

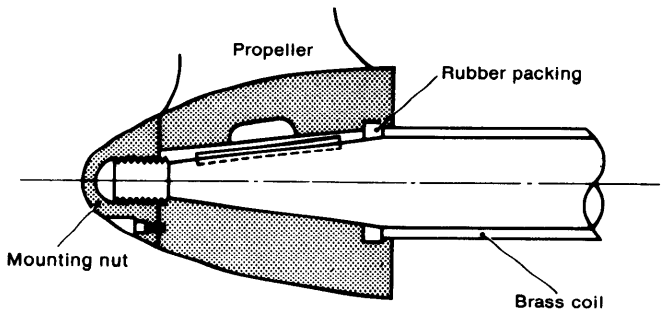

(2) Measuring the dimensions of the waterproofing rubber between the propeller shaft and propeller.

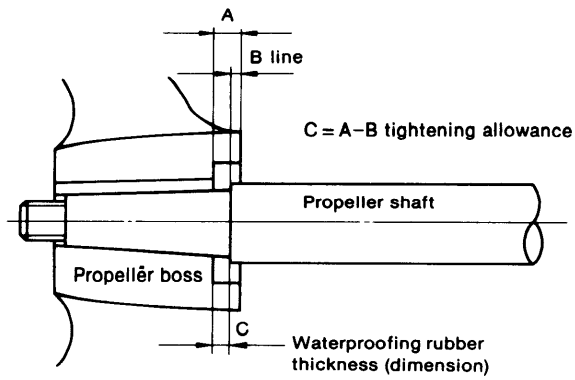

Insert the propeller onto the propeller shaft and mark the end of the propeller on the brass coil. The difference between the A dimension and B dimension in the figure is the waterproof rubber dimension, but a slight tightening allowance must be made.

(3) Propeller position

With the propeller installed, the ship's full speed will not be obtained if the spacing between the propeller and hull is not equal to, or greater than, the value given in the figure.

The position of the propeller section shaft center must be at least the diameter of the propeller from the surface of the water with the ship fully loaded.

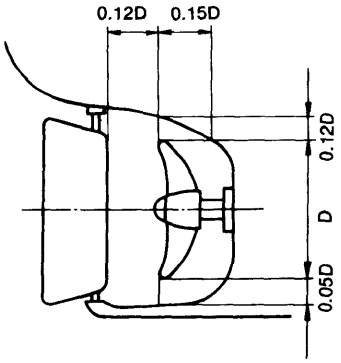

4. Interior Piping and Wiring

4-1 Exhaust pipe

4-1.1 Exhaust silencer installation

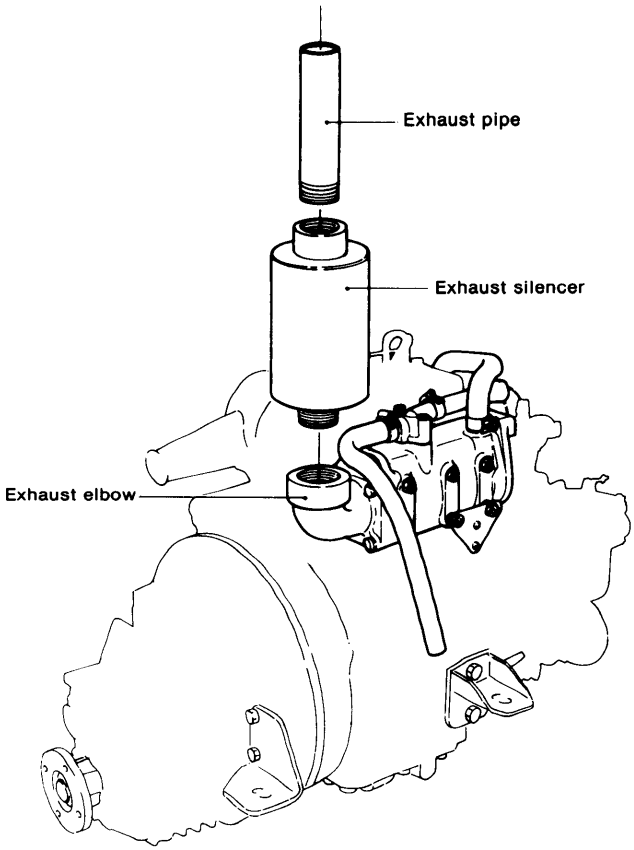

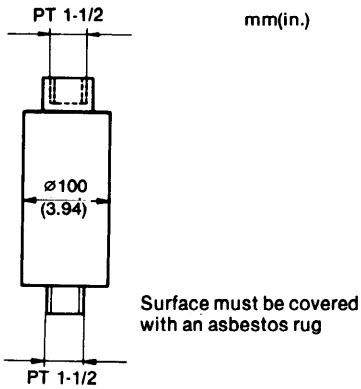

(1) Installation method and dimensions
- Install the exhaust silencer either directly on the exhaust elbow installed.on the exhaust manifold or on the exhaust pipe.
- When the silencer is installed on the exhaust pipe, use an exhaust pipe socket.
- In the case of a horizontal exhaust, use a horizontal exhaust elbow.

(2) Precautions
1) Always use an exhaust elbow when the direction of the exhaust must be changed.
2) Clamp the pipe to the hull at suitable positions.
3) Decide the exhaust silencer installation position according to the structure of the hull, but since the silencer reaches a high temperature, it should protrude past the cabin.
4) When piping the exhaust, the prevention of heat damage and fire must be considered because the exhaust is hot. Always cover the surface of the exhaust pipe with a rug.
5) Take measures to prevent rain from entering the exhaust pipe when the ship is moored.
6) Avoid long piping. When the piping must be long and the change of direction large, use large diameter pipe.

4-1.2 Mixing elbow installation

(1) Installation method and dimensions

1) L-type

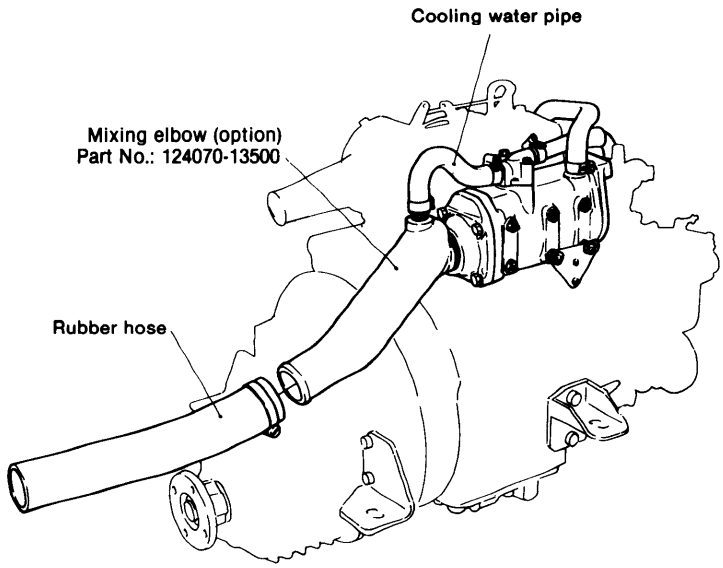

- Rubber hose connection dimensions

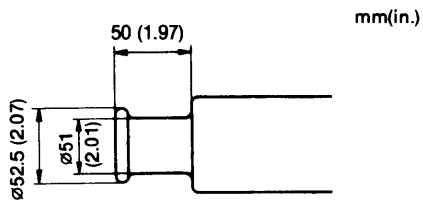

Rubber hose
Inside diameter: 50.8 mm
Outside diameter: 63 ~ 70 mm
Hose clip: 65 ~ 70 mm

2) U-type

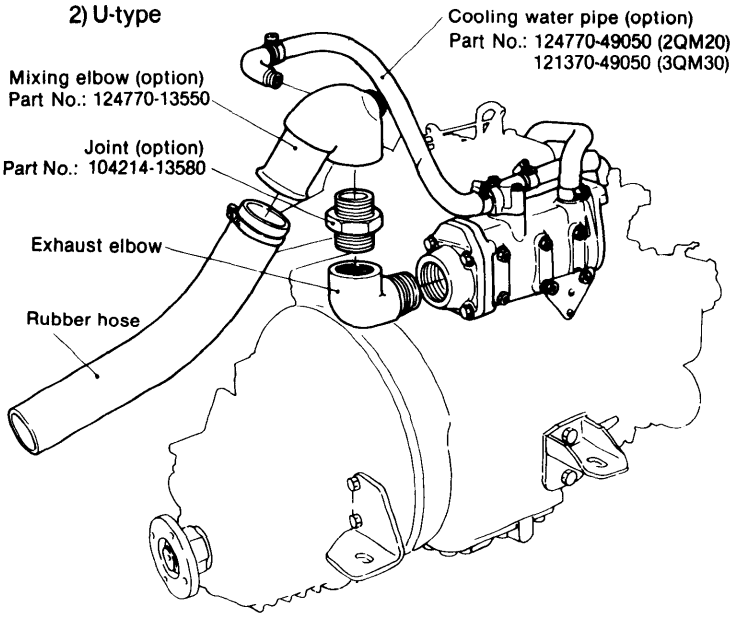

• Rubber hose connection dimensions

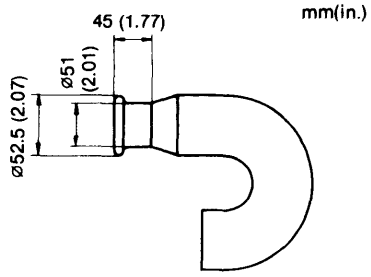

Rubber hose dimensions
Inside diameter: 50.8 mm
Outside diameter: 63 ~ 70 mm
Hose clip: 65 ~ 70 mm

(2) Exhaust section installation

1) When the outlet port of the cooling water is above the waterline (when C is greater than 200mm):

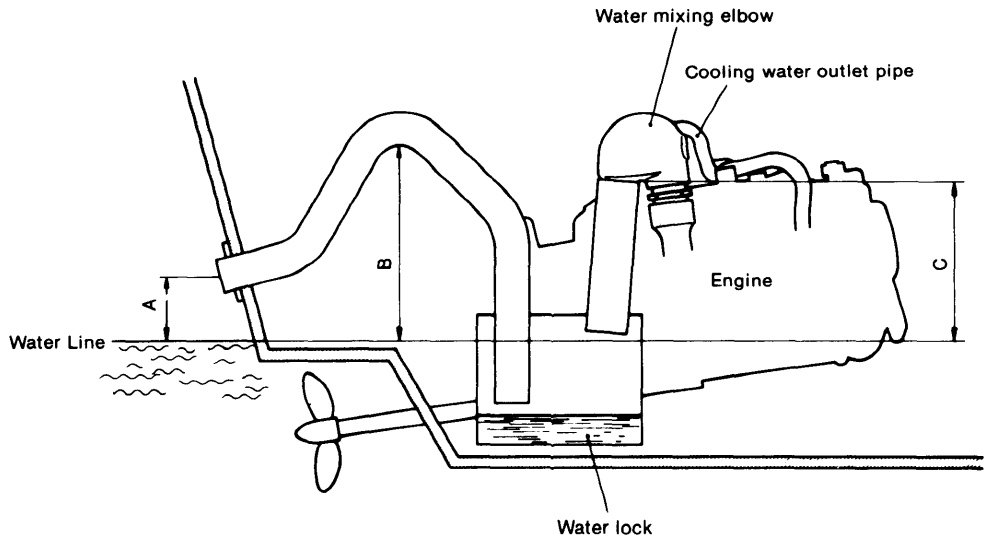

A 150mm (5.91in.) (Minimum)
B 350mm (13.78in.) (Minimum)

2) When the cooling water outlet port is below the waterline (when C is smaller than 200mm):

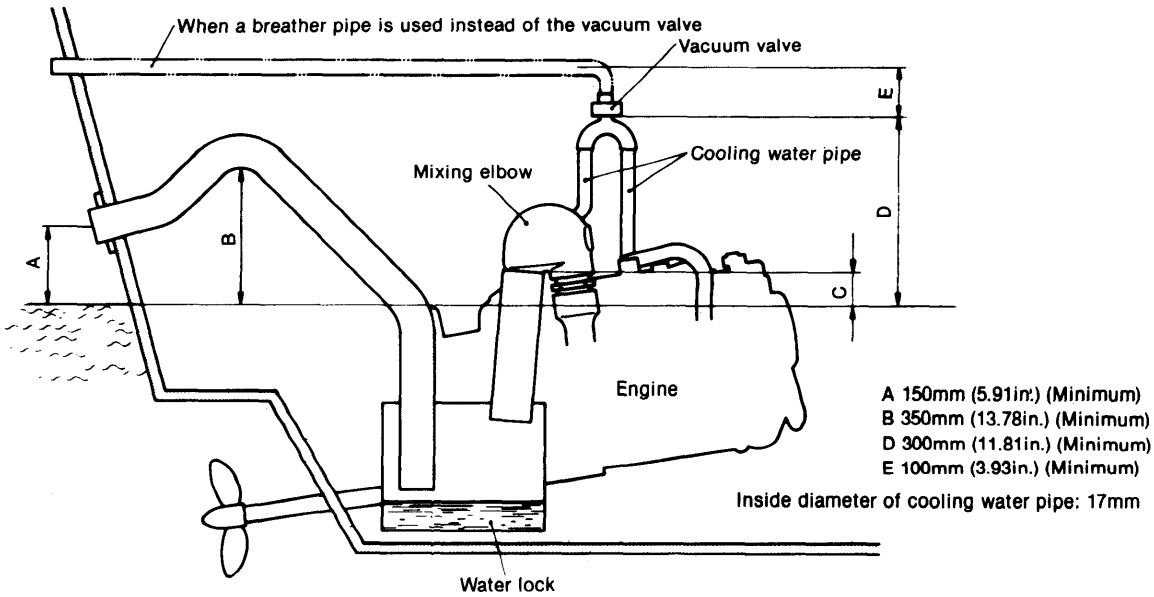

4-2 Cooling water pipe

4-2.1 Kingston cock (R-type:option)

(1) Installation

- Determine the position of the Kingston cock by the position of the cooling water pipe and the direction of the cooling water pump inlet joint.
- Finish the contact face of the Kingston cock hole drilled in the ship's bottom by grinding.
- Install the cock using canvas on the outside of the hull and canvas or rubber packing on the inside.

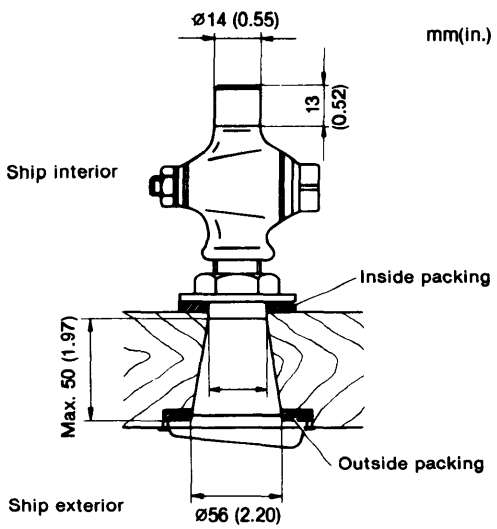

(2) Scoop strainer

The inlet section should have a double bottom to prevent troubles stemming from a lack of cooling water caused by the sucking in of vinyl sheets etc., at the Kingston cock inlet port. Install the strainer so that the large area of the scoop strainer faces away from the direction of the ship's forward movement, as shown in the figure.

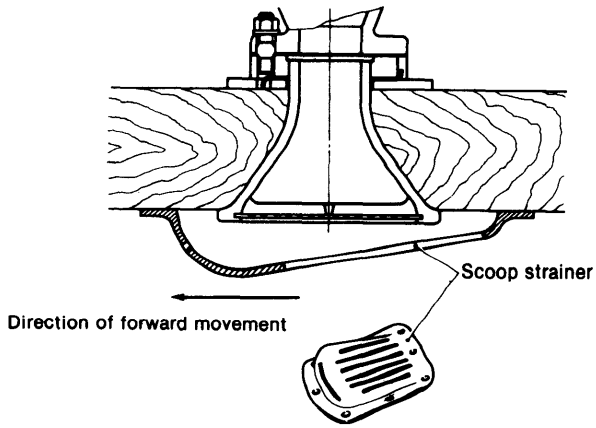

(3) Piping

- Use rubber hose for piping from the Kingston cock to the cooling water pump.
  Rubber hose size: Inside diameter x outside diameter x length = 13×20×ℓ(mm)
  Hose clip size: ø22 mm
- The piping must be as straight as possible and bends must not be severe—radius must be 100 mm or greater.

(4) When two Kingston cocks are used
When one of the Kingston cocks becomes clogged, operation can be switched to the other while the clogged cock is being cleaned, even during operation. In this case, use a 3-way cock for switching.

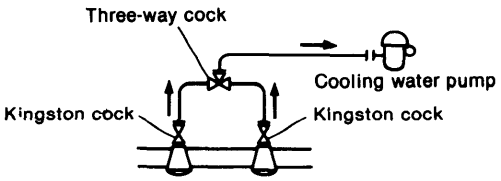

Kingston cocks installed at two points

4-2.2 Cooling water outlet pipe

(1) When a mixing elbow is installed, refer to the exhaust rubber hose piping section.
(2) When the mixing elbow is not used, connect a rubber hose to the cooling water outlet fixture so that the cooling water is purged directly from the ship.

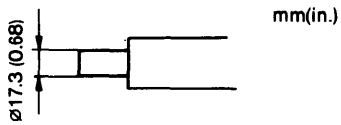

outlet fixture

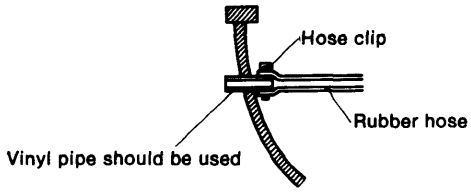

Rubber hose size: Inside diameter × outside diameter × length = 17 × 24 × ℓ (mm) Hose clip: 2pcs.

4-2.3 Bilge pipe piping precautions

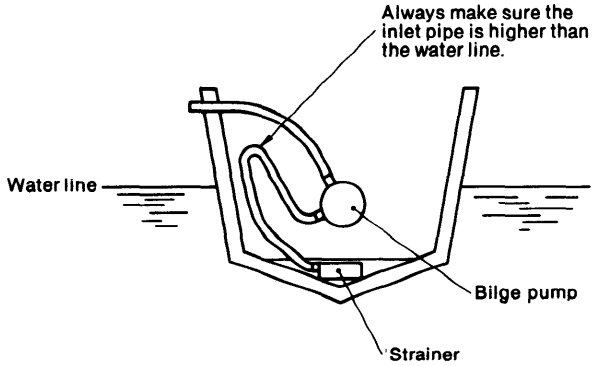

If the Kingston cock is not closed, water will enter from the cock.

4-3 Fuel tank and fuel piping

4-3.1 Fuel tank

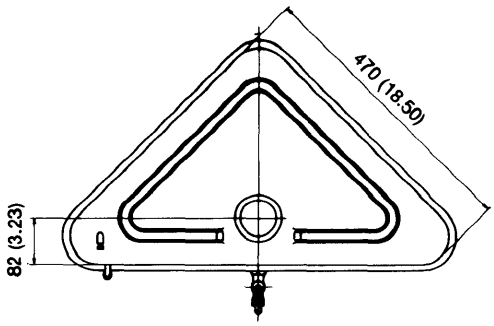

(1) Clean the interior of the fuel tank with light oil and install the tank in the hull.
(2) The fuel tank must be positioned so that fuel is easy to add, fuel level is easy to check, and draining is easy. Moreover, take engine maintenance and inspection into consideration when deciding fuel tank position.
(3) A fuel pump is installed as standard, but the fuel tank should be installed at the highest possible point as near the engine as possible.

mm (in.)

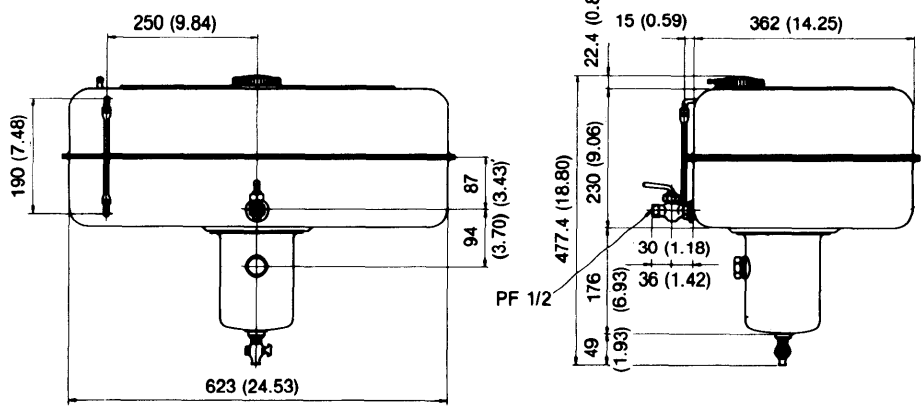

capacity: 30ℓ
Part No.: 83213—003012

4-3.2 Fuel piping

(1) The hose must be as straight as possible.
Minimum bend radius: 50mm or more

(2) Be careful that the fuel piping does not touch the exhaust pipe or other hot parts.

(3) Fuel pipe (option) details.

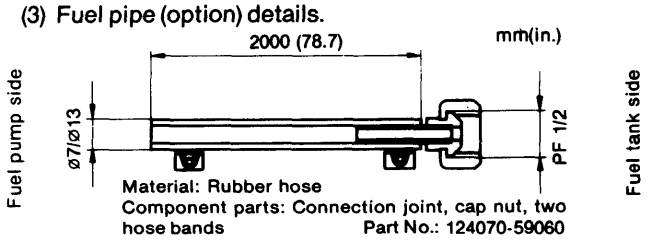

4-4 Electrical system

4-4.1 Battery installation and wiring

(1) Select a battery position which meets electrical wiring requirements.
The battery must be positioned for easy checking of the electrolyte level.

(2) Install the battery on the battery mounting frame.

(3) Connect the wiring securely so that there is no voltage drop, and cover the terminals for protection.

(4) Select battery cables (battery—starter ground, battery—battery switch, battery switch—starter) having a total resistance of less than 0.002Ω.

4-4.2 Instrument panel

(1) Mounting dimensions

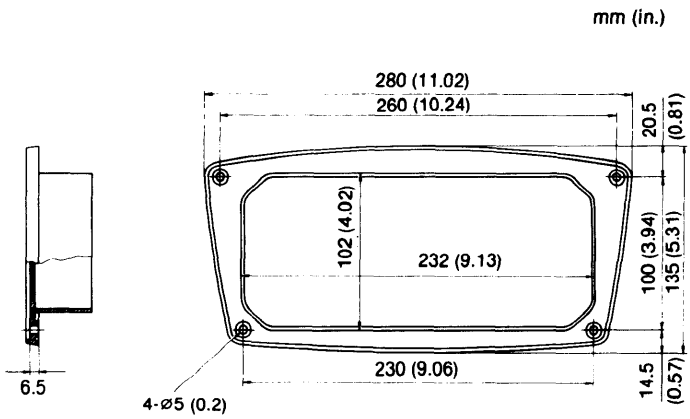

Drill the mounting holes and bolt holes in accordance with the instrument panel mounting diagram.

(2) Installation location and dimensions
The instrument panel should be installed in the cabin, but if it is installed outside, pay careful attention to the following points.

1) Install in a location where there is no danger of the panel being splashed by sea water.

2) When the instrument panel is installed where it may be splashed by sea water, install it in a recessed position or install a cover.

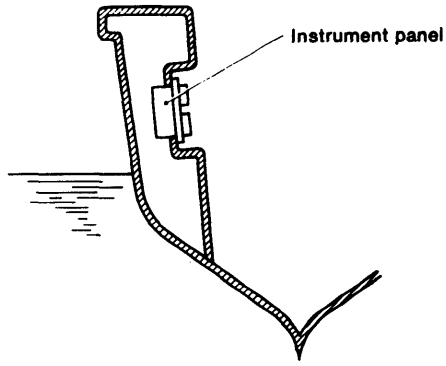

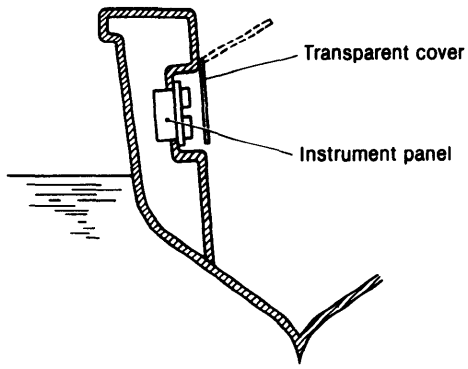

3) Installation angle
The instrument panel must be installed at an angle of between 45° and 90° to prevent indicating errors.

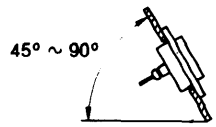

4-5 Remote control

4-5.1 Remote control stand installation dimensions

(1) Morse two-handle remote control (MS)

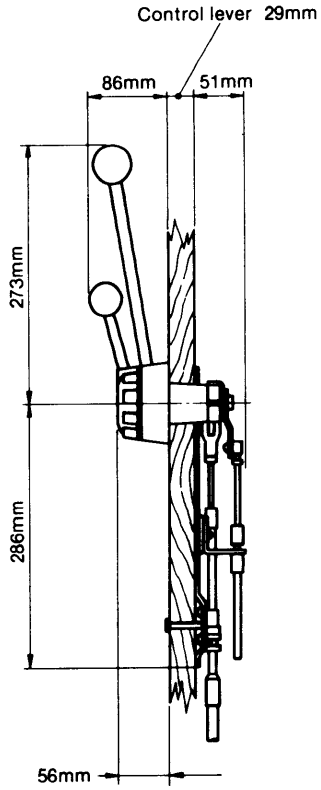

(2) Morse one-handle remote control (MT)

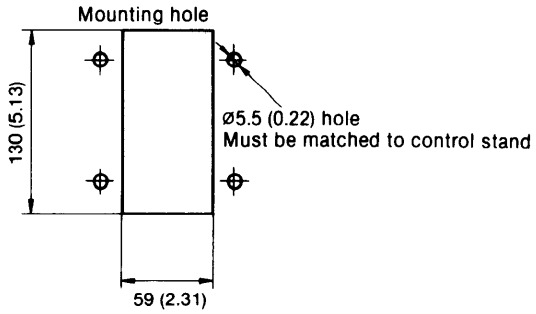

(3) Engine stop remote control, decompression remote control

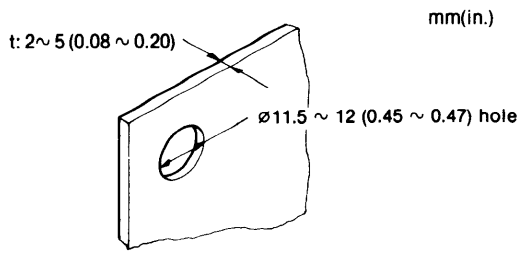

Common to both stop remote control and decompression remote control

4-5.2 Remote control cable precautions

The remote control push-pull cable must be as straight as possible. Numerous bends will increase the operating load and shorten the life of the cable.

5. Front Power Take-Off

Power to drive the deck machinery and small generator, pump, compressor, etc. can be taken from the front of the engine.
Power take-off capacity, drive system selection and the quality of installation centering have a considerable effect on the engine, and care must be exercised.

5-1 Front power take-off details

A crankshaft V-pulley is used as the front power take-off coupling.

2QM20 (H)

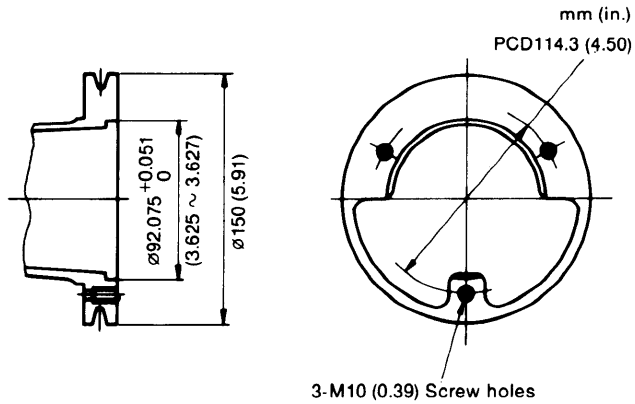

3QM30 (H)

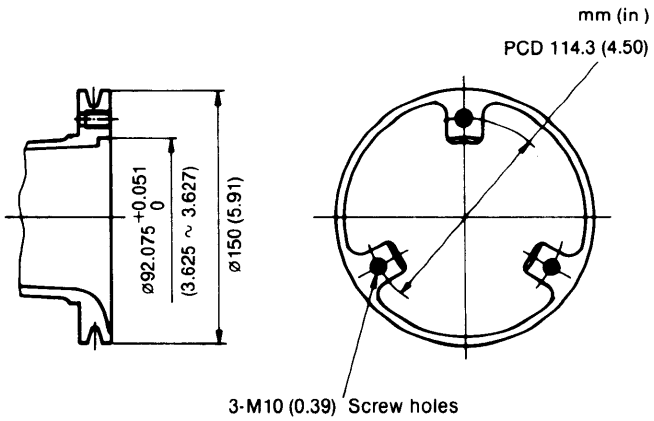

5-2 Front drive system

Due to the installation or structure of the engine, the front PTO may be pulled out. In such a case, caution should be exercised regarding the following items

- Don't use the engine directly coupled to a V-pulley.
- Use a flexible coupling or a universal joint as a means of coupling for the engine.

(1) When directly coupling to a working machine:

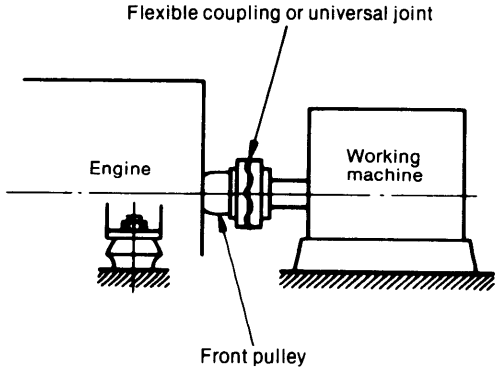

(2) When a pulley is used:

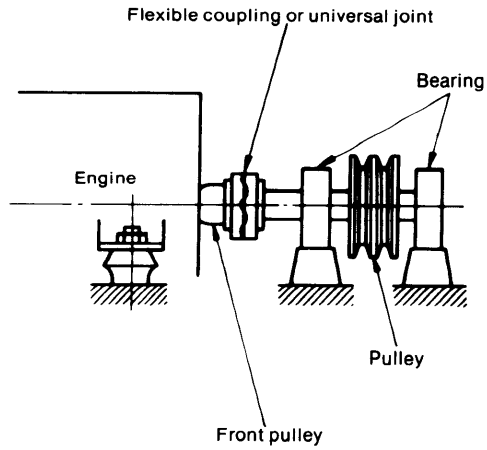

5-3 Front power take-off general precautions

(1) With belt drive, the belt tension must be adjusted so that an excessive load is not applied o the drive shaft.
(2) Since the possible take-off power depends on the drive system, it must be used within the allowable output range shown in the graph.
(3) The engine installation plate and driven machine installation plate must be made of steel, and securely fastened to the engine bed. Further, the bearing and driven machine must be centered and installed accurately.
(4) Pulleys and other rotating parts must be balanced.
(5) Since the engine will shake when flexible mountings are used for engine installation, a flexible coupling or universal joint must be used between the engine and the driven machine.

5-4 Front power take-off allowable output

(1) 2QM20 (H)

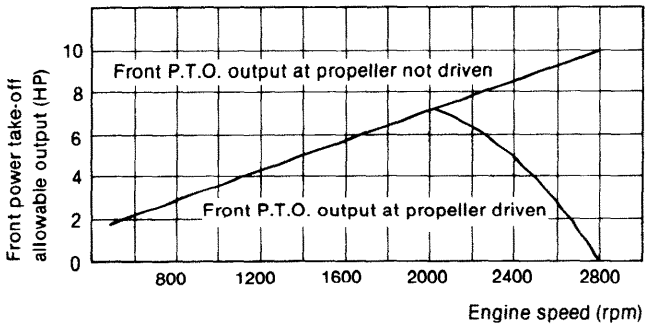

(2) 3QM30 (H)

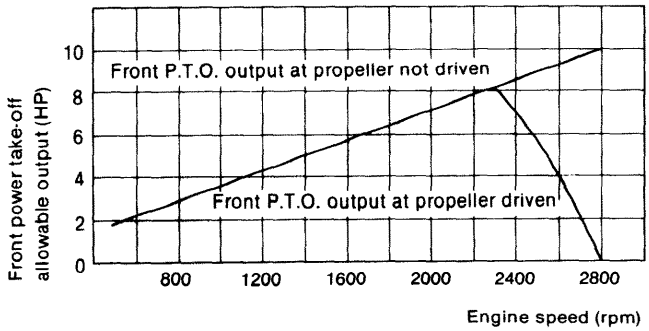

CHAPTER 13

OPERATING INSTRUCTIONS

1. Fuel Oil and Lubricating Oil 13-1
2. Engine Operating Instructions 13-8
3. Troubleshooting and Repair 13-13

1. Fuel Oil and Lubricating Oil

Selection of and proper attention to fuel and lubricating oils have a substantial effect on engine performance, and are vital factors governing engine life.
The use of low quality fuel and lubricating oils will lead to various engine troubles. Yanmar diesel engines will display satisfactory performance and ample reliability if the fuel and lubricating oil recommended by Yanmar are used correctly. For the engine to have long-term high performance, sufficient knowledge of the properties of the fuel and lubricating oils and their selection, management and usage are necessary.

1-1 Fuel

1-1.1 Properties of fuel

Numerous kinds of fuels are used with diesel engines, and the properties and composition of each differ somewhat according to the manufacturer.
Moreover, the various national standards are introduced here for reference purposes.

1-1.2 Recommended fuels

Manufacturer	Brand name
Caltex	Caltex Diesel Oil
Shell	Shell Diesoline or local equivalent
Mobil	Mobil Diesel Oil
Esso	Esso Diesel Oil
British Petroleum	BP Diesel Oil

1-1.3 Fuel selection precautions

Pay careful attention to the following when selecting the fuel.

(1) Must have a suitable specific gravity
Fuel having a specific gravity of 0.88 ~ 0.94 at 15°C is suitable as diesel engine fuel. Specific gravity has no relation to spontaneous combustibility, but does give an idea of viscosity and combustibility or mixing of impurities.
Generally, the higher the specific gravity, the higher the viscosity and the poorer the combustibility.

(2) Must have a suitable viscosity
When the viscosity is too high, the fuel flow will be poor, operation of the pump and nozzle will be inferior, atomization will be faulty and fuel combustion will be incomplete.
If the viscosity is too low, the plunger, nozzle, etc. will wear rapidly because of insufficient lubrication. Generally, however, the higher the viscosity, the lower the quality of the fuel.

(3) Cetane value must be high.
The most important indicator of fuel's combustibility is its cetane value (also represented by cetane index or diesel index), The cetane value is particularly important for fuels used in high-speed engines. The relationship among the cetane value, startability and firing delay is shown in the below figure. Firing delay becomes smaller and starting characteristics better as the cetane value becomes higher.

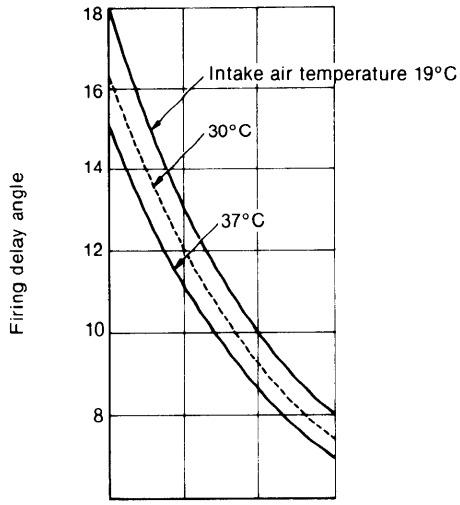

Relationship between cetane value and firing delay

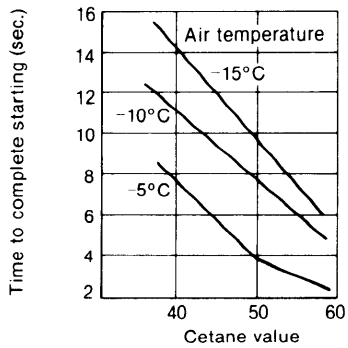

Cetane value and starting characteristic

The use of a fuel with an unsuitable cetane value will cause the following troubles:

1) Difficult starting.
2) Poor operation.
3) High combustion pressure and diesel knock.
4) Lower output and engine damage because of overheating caused by knocking.
5) Sticking of nozzles and exhaust valves.
6) Severe smoking, carbon build-up inside the engine, and oil contamination.
7) Deterioriation of the oil and excessive wear in the piston rings, ring grooves, and cylinder liner.

(4) The level of impurities must be low

1) Sulfur
With proper combustion sulfur in the fuel turns to nitrous acid gas (SO_2) and sulfuric anhydride (SO_3). When combustion is imperfect, it becomes sulfuric acid containing water that corrodes and wears the cylinder liners, pistons, exhaust valve and exhaust pipe.

Properties and compositions of fuel of various national standards

Properties and components \ National standard		Japan JIS-K-2204-1965		U.S.A. ASTM-D975-74	U.K. BS-2689-70	
		Class No.1 light oil	Class No.2 light oil	No. 2D Diesel oil	Class A1	Class A2
Specific gravity	15/4°C	—	—	—	—	—
Kinetic viscosity	30°C cst	2.7 or more	2.5 or more	(~ 5.2)	(~ 7.5)	(~ 7.5)
	37.8°C (100°F) cst	(2.3 or more)	(2.2 or more)	2.0~4.3	1.6 ~ 6.0	1.6 ~ 6.0
Reaction		Neutral	Neutral	—	—	—
Flash point	°C	50 or more	50 or more	51.7 or more	55 or more	'55 or more
Flow point	°C	−5 or less	−10 or less	−12 or less	—	—
Residual carbon	Weight %	(10% residual oil) 0.15 or less	(10% residual oil) 0.15 or less	0.35 or less	0.2 or less	0.2 or less
Moisture	Volume %	—	—	—	0.05 or less	0.05 or less
Ash	Weight %	—	—	0.01 or less	0.01 or less	0.01 or less
Sulfur	Weight %	1.2 or less	1.2 or less	0.5 or less	0.5 or less	1.0 or less
Cetane valve		50 or more	45 or more	40 or more	50 or more	45 or more
Sludge or sedimentation	%	—	—	0.05 or less	0.01 or less	0.01 or less
Distillation properties, temperatures at 90% distillation	°C	350 or below	350 or below	282.21 ~ 338	357 or below	357 or below

2) Water content
A high water content causes sludge, resulting in lower output, imperfect combustion and trouble in the fuel injection system.
3) Carbon content
If the carbon content is high, carbon will remain inside the combustion chamber, causing accelerated cylinder liner and piston wear and corrosion of the pistons and exhaust valves.
4) Residual carbon (coke content)
Coke becomes a carbide that sticks to the end of the nozzle, causing faulty injection. In addition, unburned carbon will build up on the pistons and liners, causing piston ring wear and sticking.

1-1.4 Simple methods of identifying fuel properties

(1) Fuel that is extremely odorous and smoky contains a large amount of volatile components and impurities.
(2) Fuel that emits little smoke when used in a lamp is of good quality.
(3) Fuel that emits a crackling sound when soaked in paper and ignited contains a high water content.
(4) If a transparent film of diesel oil is squeezed between two pieces of glass, the water content and impurities can be determined.
(5) If cracked by mixing with an equal amount of sulfuric acid in a glass tube, numerous black particles and impurities will appear. These are mainly carbon and resin.
(6) Discoloration of litmus test paper indicates the presence of acids.

1-1.5 Troubles caused by bad fuel

(1) Clogging of exhaust valve
In addition to faulty compression, incomplete combustion, and high fuel consumption, a clogged exhaust valve will cause fuel to be mixed in the exhaust, leading to corrosion of the exhaust valve seat.
(2) Clogging of piston ring grooves
Clogged piston ring grooves will cause accelerated cylinder liner and piston wear due to sticking rings, fuel gas blowback, faulty lubrication, incomplete combustion, high fuel consumption, contaminated lubricating oil, and combustion gas blowback.
(3) Clogged or corroded injection valve hole
This will cause incomplete combustion and piston and liner wear, fuel injection mechanism wear, corrosion, and groove wear and corrosion.
(4) Sediment inside crankcase
Since sediment in the crankcase is often mistakenly judged as coming from the lubricating oil, care must be taken in determining its true origin.

1-1.6 Relationship between fuel properties and engine performance

Fuel property	Starting characteristic	Lubrication characteristic	Smoke generation	Exhaust odor	Output	Fuel consumption	Clogging of combustion chamber
Firing Cetane value	Directly related— Starting characteristic improves as cetane value increases	Directly related— Lubrication improves as cetane value rises	Closely related— Smoke increases as cetane value decreases	Directly related— Decreased by increasing cetane value	Irrelevant	Related	Related— Decreased by reducing cetane value
Volatility 90% end point	No clear relationship	Related— Becomes poor when volatility is poor	Directly related— Increases as volatility decreases	No direct relationship	Irrelevant	Irrelevant	Related— Increases as volatility decreases
Viscosity	No clear relationship	Some relationship— Becomes poor when viscosity increases	Related— Increases as viscosity increases	No independent relationship	Irrelevant	Irrelevant	Related— Increases with viscosity
Specific gravity	Irrelevant	Irrelevant	Related— Increases as specific gravity increases	No independent relationship	Directly related— Associated with calorific value	Related— Associated with calorific value	Related— Depends on properties of engine
10% residual carbon	Irrelevant	Irrelevant	Related— Improves as residual carbon decreases	No independent relationship	Irrelevant	Irrelevant	Related— Decreases as residual carbon decreases
Sulfur				No independent relationship			
Flash point				No independent relationship			

1-1.7 Fuel handling precautions

(1) Fill the fuel tank after work to prevent condensation of water in the tank.
(2) Always use a tank inlet strainer. Water mixed in the fuel can be removed by removing the strainer quickly.
(3) Remove the plug at the bottom of the fuel tank and drain out the water and sediment after every 100 hours of operation, and when servicing the pump and nozzle.
(4) Do not use fuel in the bottom of the fuel tank because it contains large amounts of dirt and water.

1-2 Lubricating oil

Selection of the lubricating oil is extremely important with a diesel engine. The use of unsuitable lubricating oil will cause sticking of the piston rings, accelerated wear and seizing of the piston and cylinder liner, rapid wear of the bearings and other moving parts, and reduced engine durability. Since this engine is a high-speed engine, always follow the lubricating oil replacement interval.

1-2.1 Action of the lubricating oil

(1) Lubricating action: Builds a film of oil on each moving part reduces wear and its accompanying damage.
(2) Cooling action: Removes heat generated at moving parts by carrying it away with the lubricating oil flow.
(3) Sealing action: Maintains the air tightness of the pistons and cylinders by the oil film on the piston rings.
(4) Cleaning action: Carries away carbon produced at the cylinders as well as dust that has entered from the outside.
(5) Rustproofing action: Prevents corrosion by coating metal surfaces with a thin film of oil.

Various additives are added to the lubricating oil to assure that adequate performance is assured under the high-speed, high-load and other severe operating conditions met by modern diesel engines. While these additives differ with each manufacturer, commonly used additives include:

1) Flow point reduction additive
2) Viscosity index improvement additive
3) Oxidation prevention additive
4) Cleaning dispersent
5) Lubrication additive
6) Anticorrosion additive
7) Bubble elimination additive
8) Alkali neutralizer

1-2.2 Required lubricating oil conditions

(1) Must be of suitable viscosity
If the viscosity is too low, the oil film will be too thin and the lubricating action insufficient. If the viscosity is too high, the friction resistance will be increased and starting will become especially difficult.
(2) Viscosity change with temperature must be small.
While the lube oil temperature goes from low at starting to high during operation, the viscosity change by temperature should be small. That is, the viscosity index should be high at all temperatures.
(3) Must have good lubricating capability
That is, it must coat metal surfaces as a thin film. In other words, the lubricating oil must coat the metal surfaces so that metal-to-metal contact caused by breaking of the oil film at the top dead center and bottom dead center piston position does not occur, or that the oil film is not broken by collision, even at the bearings.
(4) Mixability with water must be low
Since water can mix with the oil because of the presence of cooling water in the engine, emulsification of water and oil, which causes the oil to lose its lubricating properties, must be prevented.
(5) Must be neutral and difficult to oxidize
Since acids and alkalis corrode metal, the lubricating oil must be neutral. Moreover, since even a neutral oil will be oxidized easily by contact with the combustion gas, the oil must be stable with few oxidizing elements.
(6) Must withstand high temperature and must evaporate or combust with difficulty
Oil must have a high flash point. If it is evaporated by heat or is not burned completely, carbon will be produced. This carbon is toxic.
(7) Must not contain any water or dirt and must have a low sulfur and coke content

1-2.3 Classification by viscosity

SAE No.	−17.8°C (6°F)		98.9°C (210°F)		Applicable temperature range (outside temperature)
	Saybolt universal viscosity (sec)	Dynamic viscosity (cst)	Saybolt universal viscosity (sec)	Dynamic viscosity (cst)	
5W	Under 4,000	Under 869	—	—	20°C or less
10W	6,000 ~ 12,000	1,303 ~ 2,606	—	—	
20W	12,000 ~ 48,000	2,606 ~ 10,423	—	—	
20	—	—	45 ~ 58	5.73 ~ 9.62	20°C ~ 35°C
30	—	—	58 ~ 70	9.62 ~ 12.93	
40	—	—	70 ~ 85	12.93 ~ 16.77	35°C or greater
50	—	—	85 ~ 110	16.77 ~ 22.68	

Since only 98.9°C viscosity is stipulated for S.A.E. No. 20 ~ 50 oil in the table, and only −17.8°C viscosity is stipulated for S.A.E. No. 5W ~ 20W oil, they are not guaranteed at other temperatures. On the other hand, S.A.E. No.10W viscosity is stipulated and oil having viscosity equal to that of S.A.E. No.30 even at 98.9°C is called S.A.E. No.10W—30, or multigrade oil. Multigrade oil comprises S.A.E. No. 5W—20, 10W—30, and 20W—40. In arctic regions, oil from S.A.E. No. 20W to 10W—30 can be used.

1-2.4 SAE service classification and API service classification

SAE new classification (1970)	API service classification (1960)
CA	DG
CB•CC	DM
CD	DS

(1) DG grade: Used when deposits and engine wear must be controlled when the engine is normally operated at a light load using low sulfur fuel.
(2) DM grade: Used when the generation of deposits and wear caused by sulfur in the fuel is possible under severe conditions.
(3) DS grade: Used under extemely severe operating conditions or when excessive wear or deposits are caused by the fuel.

Classification	Engine service (API)
CA	Light duty diesel engine service: Mild, moderate operation diesel engine service with high-performance fuel, and mild gasoline engine service. The oil designed for this service was mainly used in the 1940s and 50s. This oil is for high performance fuel use and has bearing corrosion and high temperature deposit prevention characteristics.
CB	Moderate duty diesel engine service: Mild, moderate operation diesel engine service using low performance fuel requiring bearing corrosion and high temperature deposit prevention characteristics. Includes mild gasoline engine service. Oil designed for this service was introduced in 1949. The oil is used with high sulfur fuels and has bearing corrosion and high temperature deposit prevention characteristics.
CC	Moderate duty diesel engine service and gasoline engine service: Applicable to low supercharged diesel engines for moderate to severe duty. The oil designed for this service was introduced in 1961 and is widely used in trucks and agricultural equipment, construction machinery, farm tractors, etc. The oil features high deposit prevention characteristics in low supercharged diesel engines, and rust, corrosion and low temperature sludge prevention characteristics in gasoline engines.
CD	Severe duty diesel engine service: Applicable to high-speed, high-output high supercharged diesel engines which are subjected to considerable wear and deposits. This oil was introduced in 1955, and is used as a wide property-range fuel in high supercharged engines. It also has bearing corrosion and high temperature deposit prevention characteristics.

1-2.5 Lubricationg oil

SAE new classification CB grade or CC grade fuel having suitable viscosity for the atmospheric temperature must be used in this engine.

1-2.6 Recommended lubricating oils

Supplier	Brand Name	SAE No.			
		Below 10°C	10~20°C	20~35°C	Over 35°C
SHELL	Shell Rotella Oil	10W, 20/20W	20/20W	30 40	50
	Shell Talona Oil	10W	20	30 40	50
	Shell Rimula Oil	20/20W	20/20W	30 40	—
CALTEX	RPM Delo Marine Oil	10W	20	30 40	50
	RPM Delo Multi-Service Oil	20/20W, 10W	20	30	50
MOBIL	Delvac Special	10W	20	30	—
	Delvac 20W—40	20W—40	20W—40	—	—
	Delvac 1100 Series	10W, 20/20W	20/20W	30 40	50
	Delvac 1200 Series	10W, 20/20W	20/20W	30 40	50
ESSO	Estor HD	10W	20	30 40	—
	Esso Lube HD	—	20	30 40	50
	Standard Diesel Oil	10W	20	30 40	50
B.P. (British Petroleum)	B.P. Energol ICMB B.P. Energol DS-3	20W	20W	40	50

1-2.7 Engine oil replacement and handling

(1) Necessity of replacement

Since the engine oil is exposed to high temperatures during use and is mixed with air at high temperatures, it will oxidize and its properties will gradually change. In addition, its lubricating capabilities will be lost through contamination and dilution by water, impurities, and the fuel. Emulsification and sludge are produced by heat and mixing when the lubricating oil contains water and impurities, causing its viscosity to increase. Moreover, if the carbon in the cylinders enters the crankcase, the oil will turn pure black and the change in its properties can be seen at a glance. The continued use of deteriorated oil will not only cause wear and corrosion of moving parts, but will ultimately cause the bearings and cylinders to seize. Therefore, deteriorated oil must be replaced.

(2) Replacement period

Although the engine oil change interval differs with the engine operating conditions and the quality of the lubricating oil and fuel used, the oil change interval should be as follows when CB grade oil is used in a new engine:

1st time . . . . . After approximately 20 hours of use
2nd time. . . . . After approximately 30 hours of use
From 3rd time . . . After every 100 hours of use

Drain the old oil completely and replace it with new oil while the engine is still warm.

CAUTION: Never mix different brands of lubrication oil.

1-2.8 Adding oil

The crankcase and clutch case are not connected. For the crankcase, add one of the lubricating oils described in chapter 1.2.6. For the clutch case, add the lubrication oil described below. Be sure not to mix up the oils.

Supplier	Kinds
SHELL	DEXRON
CALTEX	TEXAMATIC FLUID
MOBIL	ATF220
ESSO	ATF
B.P.	AUTRAN DX

(1) Remove the clutch case clutch and head cover filler plug (engine), and fill with specified lubricating oil up to the top marks on the respective dipsticks. (Oil levels must not drop below the lower marks on the dipsticks.)

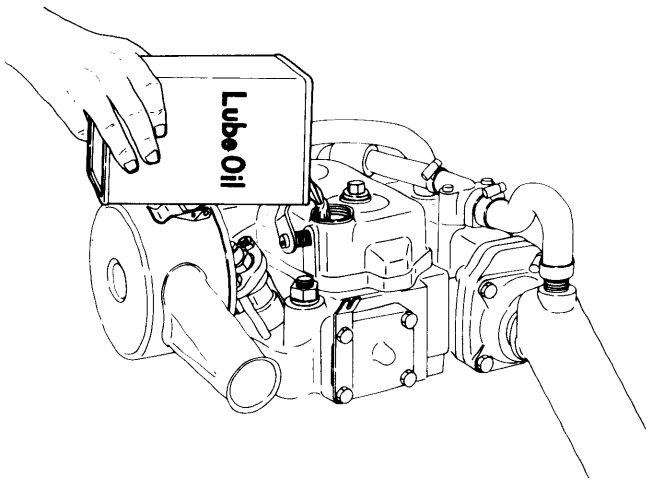

Engine

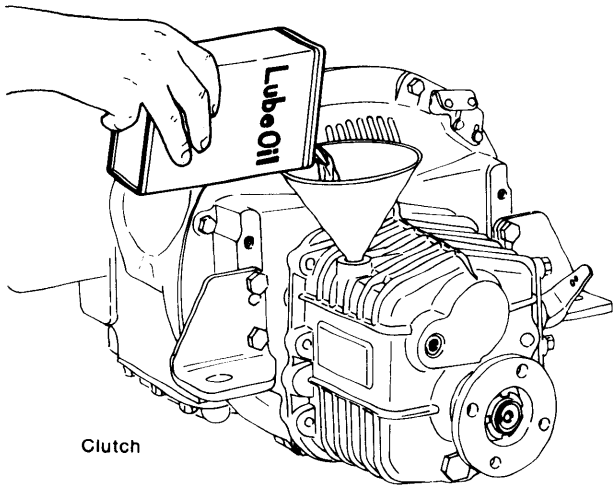

Clutch

(2) Since it takes sometime for the oil to flow completely into the clutch case and oil pan, wait for 2 ~ 3 minutes after filling before checking the oil levels. Moreover, check the oil while the ship is afloat.

1-2.9 Oil capacity

Lubricating oil capacity at an engine mounting angle (rake) of 8° is given below.

	Crankcase	Clutch case
2QM20(Y)	5.1ℓ	0.8ℓ
3QM30(Y)	6.5ℓ	1.2ℓ
2QM20H(F)	5.1ℓ	0.6ℓ
3QM30H(F)	6.5ℓ	1.7ℓ

- Check the crankcase oil level by completely inserting the dipstick. Check the clutch case oil level without screwing in the cap.
  The oil levels must be between the upper and lower limit marks on both dipsticks.

2. Engine Operating Instructions

2-1 Preparations before starting

2-1.1 Fueling up

(1) Check the fuel level in the fuel tank and add fuel if necessary.
(2) Remove water and dirt collected in the bottom of the tank using the fuel tank drain cock.
(3) Add clean fuel to the tank.
Since dirt and water sink to the bottom of the fuel drum, do not turn the drum upside down and do not pump the fuel from the bottom of the drum.

2-1.2 Adding lubricating oil

(1) Check the oil level with the dipstick, and add oil, if necessary, to bring the level up to the to mark of the dipstick.
The level must neither be too low nor too high.
(2) The crankcase and clutch case require different oil. Check both and add oil separately, being careful not to mix the oils.
(3) Since the crankcase oil flows into the crankcase through the camshaft and valve chambers, wait 2 ∿ 3 minutes before checking its level.

2-1.3 Lubricating each part

(1) Lubricate each pin of the remote control lever.

2-1.4 Checking fuel priming and injection

(1) Operate the priming lever of the fuel pump.
(2) Set the regulator handle to the full speed position and check for injection sound by turning the engine over several times.
(3) If there is no fuel injection sound, bleed the air from the fuel system.

2-1.5 Bleeding the fuel system

Since the presence of air in the fuel system anywhere between the fuel tank and the injection valve will cause faulty fuel injection, always bleed the air from the system when the fuel system is disassembled and reassembled.

Bleeding the fuel system

(1) Open the fuel tank cock.
(2) Bleed the air from the fuel filter.
Loosen the air bleeding plug at the top of the fuel filter body and operate the manual handle of the fuel pump until no more bubbles appear in the fuel flowing from the filter.
Then install and tighten the air bleeding plug.

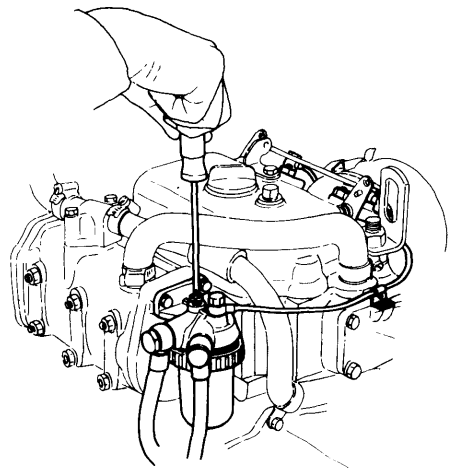

(3) Bleed the air from the fuel return pipe.
Loosen the connnector bolt of the fuel return pipe installed on the fuel injection valve, and bleed the air by operating the manual handle of the fuel pump.
Bleed the air in the No.1 cylinder (timing gear case side) and No.2 cylinder (clutch side), in that order.

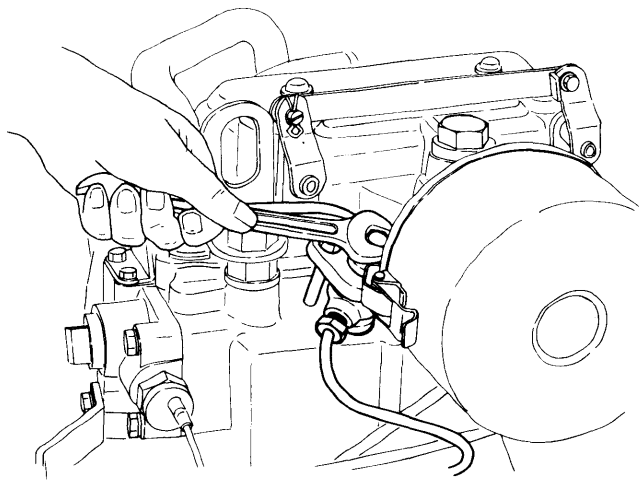

(4) Bleed the air from the fuel injection pipe.

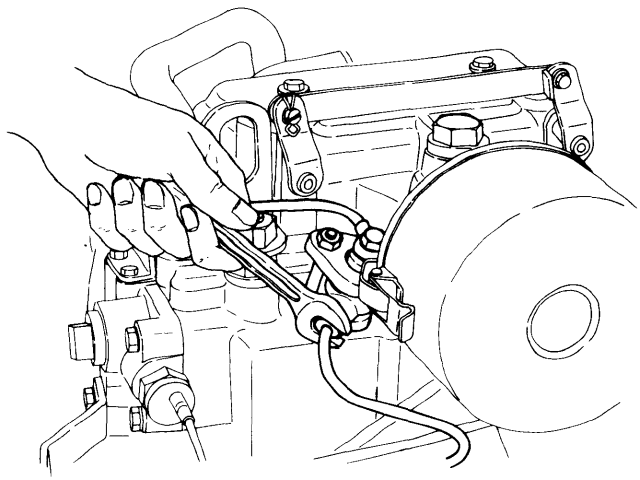

Loosen the nipple on the fuel injection valve side, set the regulator handle to the operating position and the decompression lever to the decompression position, and crank the engine. When no more bubbles appear in the fuel flowing from the end of the injection pipe, retighten the nipple.

(5) Check injection.
After bleeding the air, set the regulator handle to the operating position, set the decompression lever to the decompression position, and crank the engine. When fuel is being injected from the injection valve, an injection sound will be heard and you can feel resistance if you place your hand on the fuel injection pipe. This check must not be performed more than two or three times since overchecking will flood the combustion chamber with fuel, and faulty combustion will occur at starting.

2-1.6 Checking for abnormal sounds by cranking

(1) Set the regulator handle to the STOP position, release the compression of the engine by setting the decompression lever, and crank the engine about 10 times to check for abnormal sounds.
(2) Crank the engine with the starting handle
(Always turn the engine in the proper direction of rotation.)

2-1.7 Checking the cooling system

(1) Open the Kingston cock.
(2) Check for bending and cross-sectional deformation of the cooling water inlet pipe.
(3) Set all water drain cocks to the CLOSED position.

2-1.8 Checking the remote control system

(1) Check that the remote control handle operates correctly.
(2) Check that the engine stop remote control operates smoothly.

2-1.9 Checking the electrical system

(1) Check the battery electrolyte level and add distilled water if low.
(2) Check that the wiring is connected correctly.
(Especially for polarity.)
(3) Turn the battery switch on, set the main switch to the ON position, and check if the oil pressure lamp and charge lamp are illuminated and if the alarm buzzer sounds when the engine is stopped.
(The charge lamp should be on while the engine is stopped and should be off while the engine is running.)

2-1.10 Checking appearance and exterior

(1) Check for loose or missing bolts and nuts.
(2) Check for loose or disconnected piping and hoses.
(3) Check that there are no tools or other articles near rotating parts or on the engine.

2-2 Starting and warm-up

2-2.1 Starting

(1) Starting procedure
1) Set the clutch handle to the "NEUTRAL" postion.
2) Set the governor lever to the "MEDIUM SPEED".
3) Keep the decompression lever in the "OPERATION" position.
4) Set the main switch to the ON position.
The alarm buzzer will sound.
5) Push the starting button to start the engine.
Release the start button after the engine has started.
6) When the engine has started, the alarm lamps and buzzer will go off.
If the lamps or buzzer stay on, immediately stop the engine and check for trouble.

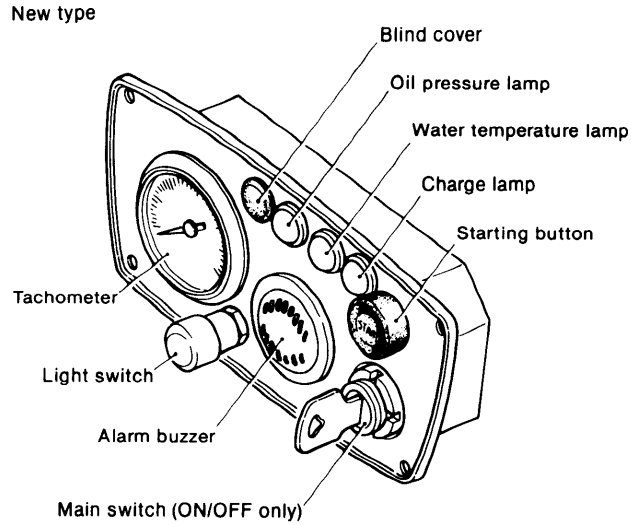

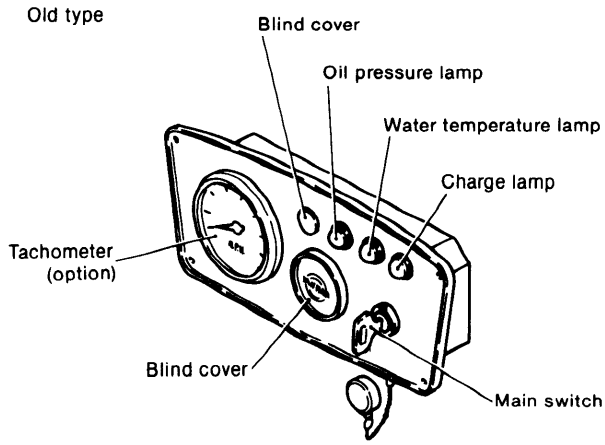

(2) Starting precaution
1) Don't continue to push the starting button over 15 seconds.
If the engine doesn't start, wait 30 seconds or more.
2) When restarting the engine, always confirm the flywheel is stopped.
If you re-start the engine while the flywheel is rotating, the pinion gear of the starter motor and the ring gear of the flywheel will be damaged.
3) When starting is difficult in cold weather lift the decompression lever to decompress the engine, and turn the starting motor. Once the engine has reached a certain speed, return the decompression lever to the "OPERATION" position. In this way, starting is made easier while current consumption is reduced.

2-2.2 Starting with one-handle remote control (2QM20H, 3QM30H)

(1) Starting procedure
1) Pull the neutral knob and set the control lever to the "MEDIUM SPEED" position.

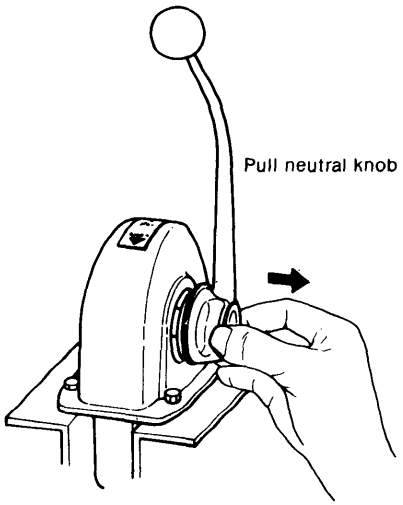

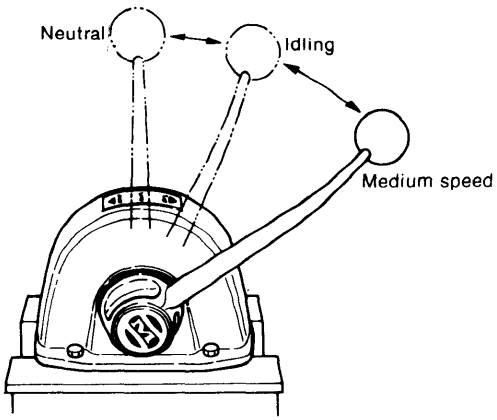

2) Set the main switch to the "ON" position, and push the starting button to start the engine.

(2) Starting in cold weather
1) Pull the neutral knob, and set the control lever to the HIGH SPEED position.

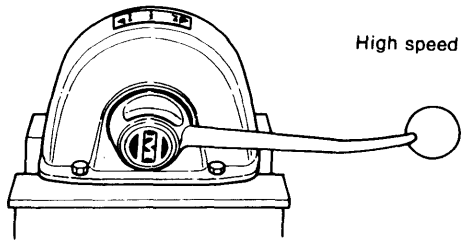

2) Set the decompression handle to the DECOMPRESSION position.
3) Set the main switch to the ON position and start the engine by pushing the starting button. After the engine has started, return the control lever to the MEDIUM SPEED position.

*When the control lever is set in the HIGH SPEED position, injection timing is automatically delayed to facilitate starting.

CAUTION: When the engine is started with the control lever in the HIGH SPEED position, the starting button must be released immediately and the control lever must be returned to the idling position after the engine has started.
If the starting button is not released, the starter motor will overrun, causing it to be damaged or burnt out.

2-2.3 After starting

(1) Warm-up operation
The engine must not be suddenly operated at full load immediately after starting. Warm up the engine for about 5 minutes after starting by running the engine at about half speed, and begin full load operation only after the temperature of each part has risen to a uniform value. Neglecting to warm up the engine will result in:
1) Seizing of the piston and liner due to sudden neat expansion of the piston.
2) Burning of piston rings and seizing of bearings/bushings because of insufficient lubrication.
3) Faulty intake and exhaust valve seat contact and shortening of the life of each part due to sudden heating.

Warm-up time (no-load operation)
1,000 ~ 1,200 rpm 3 minutes
1,600 ~ 1,800 rpm 2 minutes

CAUTION: Do not run the engine at full speed for 50 hours after installation to assure proper break-in.

(2) Checking after starting
Check the following with the clutch in the NEUTRAL position:
1) Meters and lamps on the instrument panel
• Check that all alarm lamps are off (1,000 rpm or higher).
• Alarm buzzer must be off.
2) Cooling water discharges state
(Check that the cooling water temperature reaches 45 ~ 55°C before beginning operation.)
3) Check for abnormal sounds and heating.
4) Check for oil and water leakage from piping.
5) Check the state of lubrication of the valve arms.

2-3 Operation

If warm-up operation is normal, engage the clutch and begin normal operation. Check the following during operation and stop the engine and take suitable corrective action if there are any abnormalities.

2-3.1 Checks during operation

(1) Oil pressure
Check that the lubricating oil pressure and operating oil pressure lamps are off.
Lubrication oil pressure during operation: 2.5 ~ 3.5 kg/cm²

(2) Cooling water
Periodically check whether water is being discharged from the cooling water outlet pipe.
If the cooling water is being discharged intermittently or if only a small amount of water is being discharged during high speed operation, immediately stop the engine and check if air is being sucked into the cooling system, the impeller of the water pump is abnormal, or the water pipes and Kingston cock are clogged.
Cooling water temperature during operation: 45 ~ 55°C.
Check that the water temperature alarm lamp is off.

(3) Fuel
Check the fuel level in the fuel tank and add fuel before the tank becomes too low. If the fuel level is low, air will enter the fuel injection system and the engine will stop.

(4) Charging
Check that the charge lamp is off.
If the charge lamp is still on even when the engine is run at 1,000 rpm or above, the charging system is faulty and the battery is not being charged.

(5) Temperature of each part
At full power operation, the surface temperature of each engine part is about 50 ~ 60°C and hot to the touch. If engine temperature is too high, the oil will be used up, the propeller shaft will not be centered, or other troubles may occur.

(6) Leakage and abnormalities
Check for water leakage, oil leakage, gas leakage, loose bolts, abnormal sounds, abnormal heating, and vibration.

(7) Exhaust color
Black exhaust smoke indicates that the engine is being overloaded and that the lives of the intake and exhaust valves, piston rings, cylinder liners, and injection nozzle will be shortened. Do not run the engine for long periods when exhaust is this colour.

(8) Abnormal sounds, abnormal heating
When abnormal sounds or abnormal heating occur during operation, immediately stop the engine and check for trouble.

2-3.2 Operating precautions

(1) Always set the battery switch and main switch to the ON position during operation.
Since the diodes of the alternator will be damaged, don't set the switches OFF position.

(2) Do not touch the starting button during operation. Operation of the starter motor pinion will damage the gears.

(3) Since the ship will resonate and vibrate at a certain speed, depending on the structure of the hull, do not operate it at that speed.

(4) Always set the clutch in the neutral position and wait for the propeller to stop rotating before raising the propeller shaft (if hoisting type stern gears are installed).

(5) Do not suddenly apply a full load to the engine or operate it at full load for long periods.

2-4 Stopping

2-4.1 Stopping procedure

(1) Before stopping, put the clutch in NEUTRAL and run the engine at approximately 1,000 rpm for about 5 minutes.

(2) Before stopping, temporarily raise the speed to the rated speed to blow out residue in the cylinders. Then stop the engine by pulling the engine stop lever to cut the fuel.

2-4.2 Stopping precautions

(1) Do not stop the engine with the decompression lever.
If the engine is stopped with the decompression lever, fuel will remain in the combustion chamber and abnormal combustion will occur when the engine is started again, perhaps damaging the engine.

(2) If the engine is stopped immediately after full-load operation, the temperature of each part will rise suddenly, leading to trouble.

2-4.3 Inspection and procedures after stopping

(1) Always close the Kingston cock after the engine is stopped.
Water may enter because of a faulty water pump, etc.

(2) In cold weather, the cooling water should always be drained after engine use to prevent freezing. There are water drain cocks on the cylinders and the exhaust manifold. (Drain the water after the engine has cooled.)

(3) Check for oil leakage and water leakage, and repair as required.

(4) Check for loose bolts and nuts, and repair as required.

2-5 Storage when moored for an extended period

(1) Securely close engine room windows and doors so that rain and snow cannot enter.
Also plug the exhaust outlet since water that enters the cylinder from the exhaust pipe will be compressed when the engine is started, causing serious trouble.
(2) The ship may also sink because of water leakage at the stern tube stuffing box packing. This can be prevented by tightening the packing.
(3) Change the lubricating oil before cranking the engine.
(4) Wipe off each part and coat with oil to prevent rusting of the engine exterior.
(5) Coat the regulator handle stand and each link with a thin film of lube oil or grease.
(6) Run the engine once a week to lubricate each part.This will prevent rusting of the bearings, pistons, and cylinder liners.

2-6 Emergency stop

(1) Loosen the fuel valve high-pressure pipe to release the fuel.
(2) Pull the decompression lever (decompression mechanism) so that compression is not applied to the combustion chamber.
(3) Block the air intake port so that air does not enter the combustion chamber.

3. Troubleshooting and Repair

If trouble occurs in the engine, the engine must be immediately stopped or run at low speed until the cause of the trouble is located.
If even extremely small troubles are not detected and corrected early, they can lead to serious trouble and even disaster. Detecting and correcting troubles quickly is extremely important.

3-1 Troubles and corrective action at starting

Trouble	Cause	Corrective action
Flywheel fails to rotate correctly	(1) Battery not charged. (2) Starter motor faulty (3) Moving parts seized (4) Lubricating oil viscosity too high	1) Recharge battery 2) Disassemble and repair starter motor 3) Inspect and repair 4) Replace with lubricating oil of suitable viscosity
Starter motor rotates, but engine fails to start	(1) Fuel not injected, or injection faulty	1) Prime and bleed air from fuel lines 2) Inject fuel through injection valve and replace needle if required 3) Clean fuel filter 4) Check operation of fuel pump, plunger, plunger spring, and delivery valve, and replace if required 5) The remote control system or governor is faulty, so check if fuel is cut off, and adjust if required
	(2) Fuel injection timing incorrect.	1) Correct the fuel injection timing 2) Check if alignment mark of timing gear is aligned
	(3) Compression pressure low	1) Lap valves when air tightness of intake and exhaust valve is poor 2) Replace cylinder head packing if gas is leaking 3) Clean or replace piston rings when sticking occurs 4) Readjust timing when intake and exhaust valve closing is considerably slow.
	(4) Drop in compression ratio	1) Replace piston pin bearing and crank pin bearing if worn 2) Replace piston rings if worn

3-2 Troubles and corrective action during operation

Trouble	Cause	Corrective action
Engine stops suddenly	(1) Fuel injection cut off due to trouble in the governor or governoring system (2) Air in fuel tank (3) Air in fuel system (4) Piston, bearing, or other moving parts seized	1) Inspect, and repair or replace 2) Add fuel 3) Bleed air 4) Inspect and repair or replace the parts
Speed decreases unexpectedly	(1) Governor maladjusted (2) Overload (3) Piston seized (4) Bearing seized (5) Fuel filter clogged (6) Fuel injection pump or injection valve sticking Dirt in fuel pump delivery valve (7) Air in fuel system (8) Water in fuel	1) Adjust 2) Lighten the load (Check propeller system and power take-off system) 3) Stop the engine, and repair or replace 4) Stop the engine, and repair or replace 5) Clean the fuel filter 6) Stop the engine, and repair or replace 7) Prime and bleed air 8) Drain the fuel tank and fuel filter Add fuel if insufficient
Exhaust color is bad	(1) Load unsuitable (2) Fuel injection timing off (3) Fuel unsuitable. (4) Injection valve faulty (5) Intake and exhaust valve adjustment faulty (6) Intake and exhaust valves leaking. (7) Output of cylinders uneven (8) Injection pressure too low (9) Precombustion chamber melted	1) Adjust the load (Check propeller system and power take-off system) 2) Adjust injection timing 3) Change the fuel type 4) Test injection and replace valve if required 5) Adjust valve head clearance 6) Lap or grind valves 7) Check the fuel injection pump and injection valve and replace if necessary 8) Set injection pressure to 160 kg/cm² with shims 9) Replace the precombustion chamber...Perform item (1) above
Full load operation impossible	(1) Fuel filter clogged (2) Fuel pump plunger worn	1) Check and replace filter element 2) Replace plunger and barrel as a set
Output of cylinders uneven	(1) Air in fuel pump or fuel line (2) Water in fuel (3) Fuel injection volume uneven (4) Fuel injection timing uneven (5) Intake and exhaust valves sticking (6) Injection valve faulty	1) Prime and bleed air from the fuel pump and fuel lines 2) Drain the fuel tank and fuel filter and add fuel 3) Check and adjust injection volume 4) Check and adjust injection timing 5) Disassemble and clean 6) If nozzle is clogged, clean; Replace nozzle if necessary If the needle is sticking, inspect and replace

Trouble	Cause	Corrective action
Engine knocks	(1) Bearing clearance too large (2) Connecting rod bolt loose (3) Flywheel bolt, coupling bolt loose (4) Injection timing faulty (5) Too much fuel injected because of faulty fuel pump or injection nozzle	1) Inspect, and repair or replace parts 2) Check and retighten 3) Check and retighten or replace bolt as required 4) Check and adjust 5) Check fuel injection pump and injection nozzle and replace if required
Engine oil pressure low	(1) Lubricating oil leakage (2) Bearing, crankpin bearing clearance too large (3) Oil filter clogged (4) Oil regulator valve loose. (5) Oil temperature high; cooling water flow insufficient (6) Lubricating oil viscosity low (7) Excessive gas leaking into crankcase	1) Check engine interior and exterior piping, replenish oil 2) Check clearance, and replace bearing if necessary 3) Check and replace filter element 4) Check and readjust oil pressure 5) Check oil pump, and replace if necessary 6) Replace with oil having a high viscosity index 7) Check pistons, piston ring, and cylinder liners and replace if necessary
Lubricating oil temperature too high	(1) Cooling water flow insufficient (2) Excessive gas leaking in to crankcase (3) Overload	1) Check water pump 2) Check piston rings and cylinder liners 3) Lighten the load
Cooling water temperature high	(1) Air sucked in with cooling water (2) Cooling water flow insufficient (3) Cooling system dirty (4) Thermostat faulty	1) Check water pump inlet side pipe connections 2) Check water pump 3) Flush cooling system with cleaner 4) Replace thermostat
Propeller shaft rotates even when clutch is in neutral position	(1) Neutral position adjustment faulty (2) Friction plate seized (3) Steel plate warped	1) Reset neutral position adjusting bolt 2) Check and repair 3) Repair or replace
Ahead, neutral, astern switching faulty	(1) Clutch face seized (2) Moving parts, lever system malfunctioning (3) Remote control system malfunctioning	1) Replace 2) Readjust 3) Repair or replace
Abnormal heating	(1) Clutch slipping because of overload operation (2) Bearing damaged (3) Excessive oil (4) Oil deteriorated	1) Reduce load 2) Replace 3) Check oil level and adjust to prescribed level 4) Replace oil
Abnormal sound	(1) Gear noise caused by torsional vibration (2) Gear backlash excessive	1) Avoid high speeds 2) Replace

CHAPTER 14

DISASSEMBLY AND REASSEMBLY

1. Disassembly and Reassembly Precautions 14-1
2. Disassembly and Reassembly Tools 14-2
3. Other 14-16
4. Disassembly 14-17
5. Reassembly 14-25
6. Tightening Torque 14-31
7. Packing Supplement and Adhesives 14-33

DISASSEMBLY AND REASSEMBLY

This chapter covers the most efficient method of disassembling and reassembling the engine. Some parts may not have to be removed, depending on the maintenance and inspection objective. In this case, removal is unnecessary and disassembling in accordance with this section is not required.
However, if you follow the disassembly and reassembly procedures, adjustment methods, and precautions described in this chapter, you should be able to prevent subsequent troubles and a loss in engine performance after reassembly. The engine must be test-run to confirm that the engine is functioning properly and delivering full performance.
Since this chapter does not cover detailed disassembly and reassembly procedures for each part, refer to pertinent chapters for details.

1. Disassembly and Reassembly Precautions

(1) Record the parts that require replacement, and replace them with new parts during reassembly.
Be careful not to reassemble with the old parts.
(2) Do not forget adhesives and packing agents for sealing during reassembly.
Packing of the specified quality and packing agents matched to the packing material must be used.
(3) Arrange the disassembled parts into groups, such as individual cylinders, intake and exhaust, etc.
Cylinder No. is indicated No. 1, No. 2 and/or No. 3 cylinder from Flywheel side.
(4) The prescribed tightening torque must be observed when tightening bolts and nuts. Moreover, since the strength of the bolts and nuts depends on their material, be sure to use the correct bolts and nuts at their proper places.

Special bolts, nuts. . . . Head cover, rod bolts, flywheel, etc.
Strong bolts. . . . . Bolts marked (7) (JIS.7T)
Common bolts, nuts . . Unmarked (JIS.4T)
In addition, check the disassembly and reassembly precautions for each engine model.

2. Disassembly and Reassembly Tools

The following tools are necessary when disassembling and reassembling the engine. These tools must be used according to disassembly process and location.

2-1. General handtools

Name of tool	Illustration	Remarks
Wrench	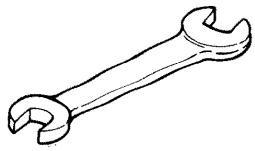	YANMAR standard Code no.; 28110-100130 Size; 10 × 13
Wrench	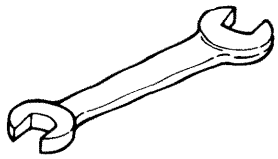	YANMAR standard Code no.; 28110-170190 Size; 22 × 19
Wrench	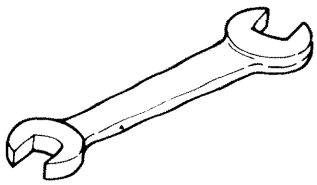	YANMAR standard Code no.; 28110-220240 Size; 22 × 24
Gasoline Feeder	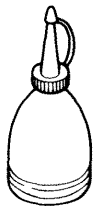	YANMAR standard Code no.; 28210-000150
Screwdriver	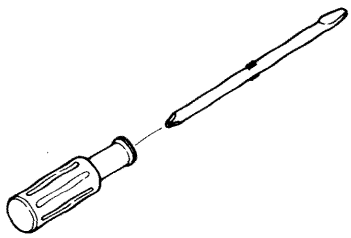	YANMAR standard Code no.: 104200-92350
Steel hammer	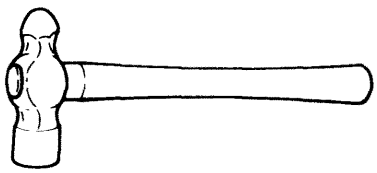	Local supply

Name of tool	Illustration	Remarks
Copper hammer	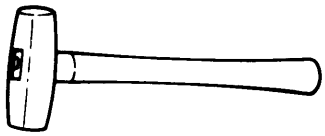	Local supply
Mallet	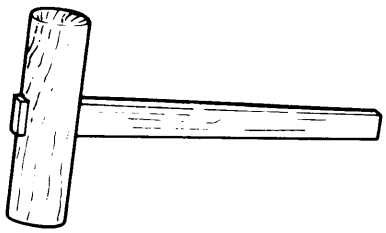	Local supply
Nippers	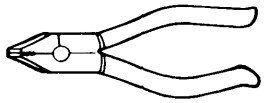	Local supply
Pliers		Local supply
Offset wrench	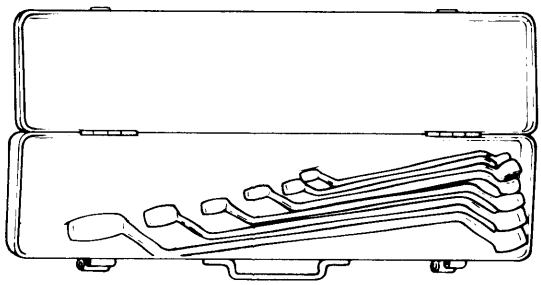	Local supply 1 set
Box spanner	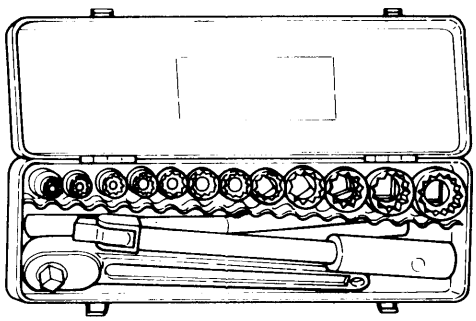	Local supply 1 set

Name of tool	Illustration	Remarks
Scraper	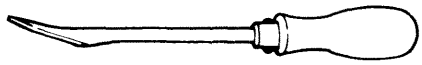	Local supply
Lead rod		Local supply
File	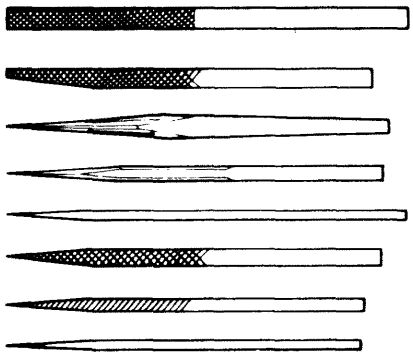	Local supply 1 set
Rod spanner for hexagon socket head screws		Local supply

2-2 Special handtools

Name of tool	Shape and size mm (in.)	Application
End nut spanner	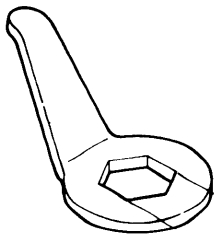 Code no.; 103338-92100	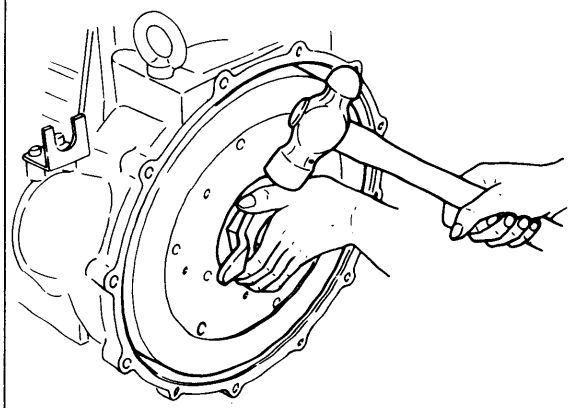
Flywheel extractor	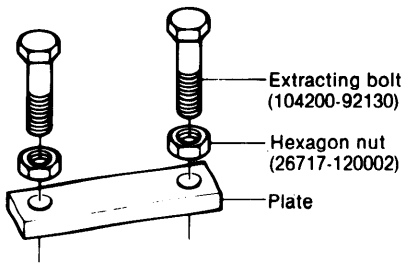 Assembly code no.; 724770-92220	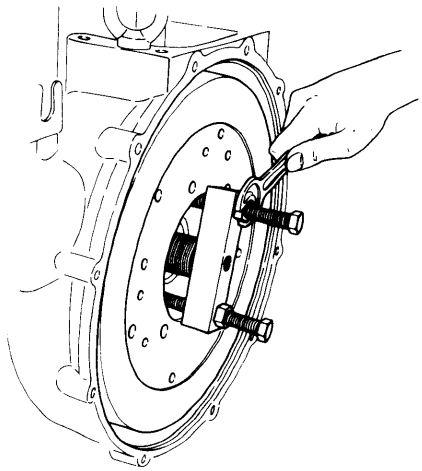
V-pulley replacer	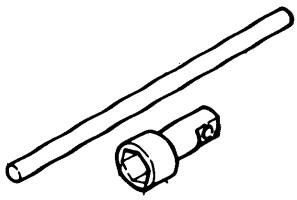 Code no.; 124770-92690	
Fuel injection valve replacer	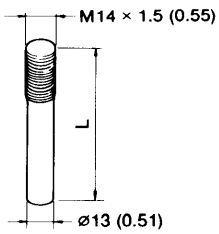 Code no.; 101104-92180	

Name of tool	Shape and size	Application
Cylinder liner replacer	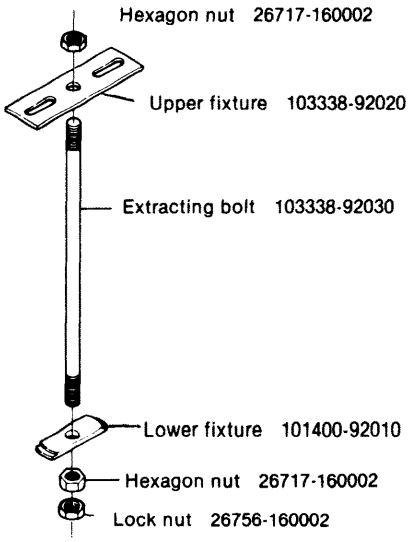 Assembly code no.; 724770-92210	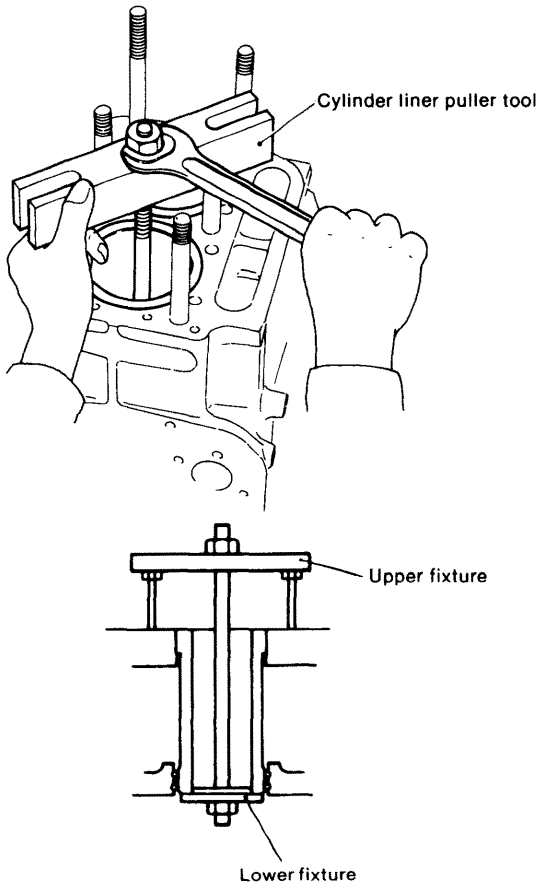
Main bearing replacer	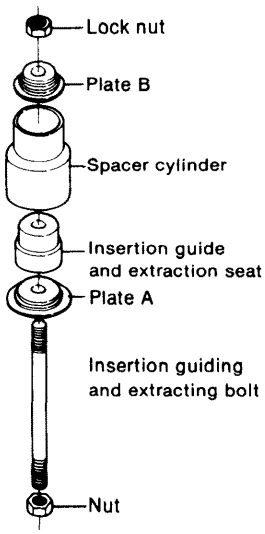 Assembly code no.; 124460-92400	Removal 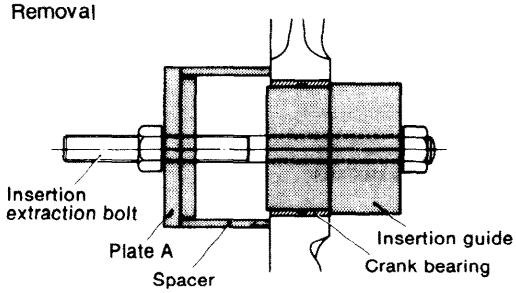 Installation 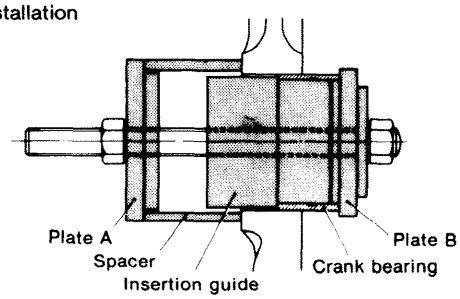

Name of tool	Shape and size mm	Application
Lubricating oil No. 2 filter case remover	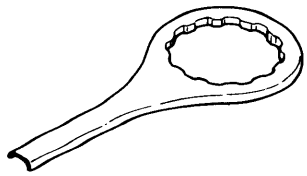	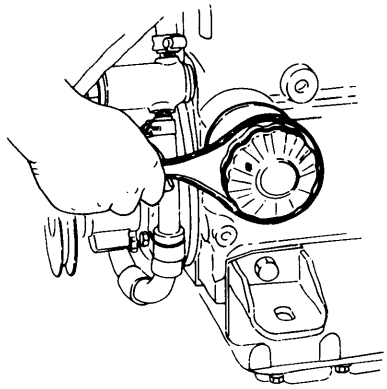
Piston pin insertion/ extraction tool	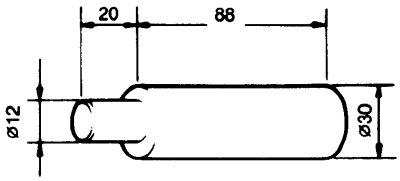	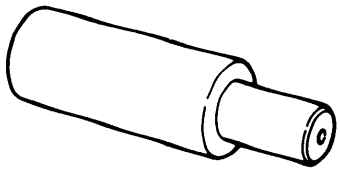 Piston pin extractor 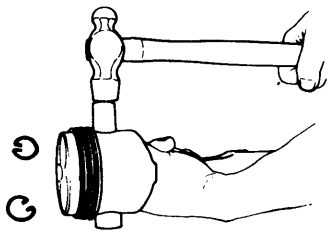 Extraction of piston pin 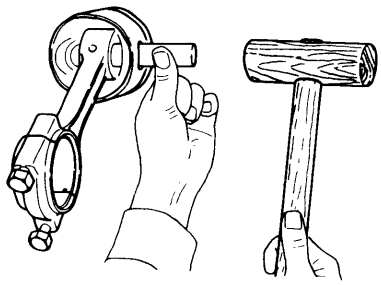 Insertion of piston pin
Connecting rod small end bushing insertion/ extraction tool	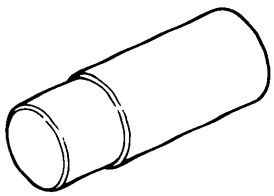	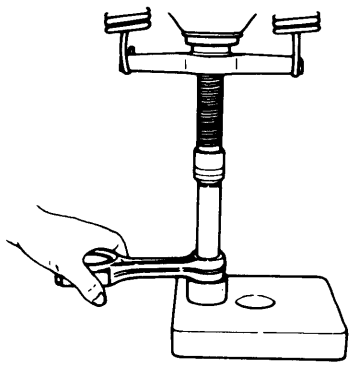 Extraction

Name of tool	Shape and size	Application
Intake and exhaust valve insertion/ extraction tool	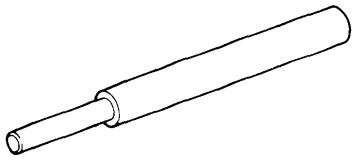	
Piston ring compressor	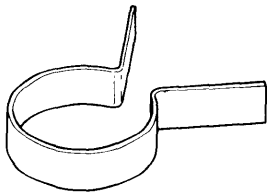 Code no.; 101404-92140	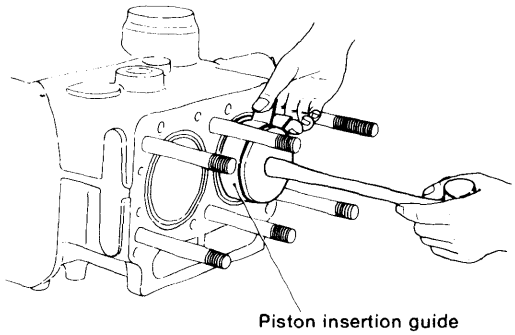
Valve lapping handle	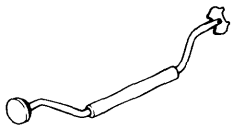 Code no.; 28210-000031	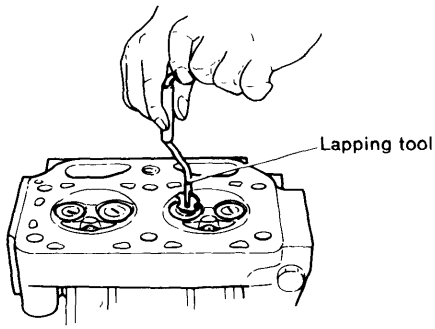
Valve lapping powder	 Code no.; 28210-000070	
Feeler gauge	 Code no.; 28312-150750	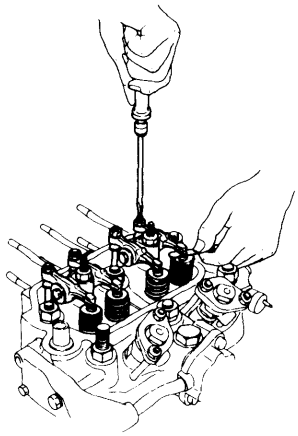

Name of tool	Shape and size mm	Application
Pulley puller	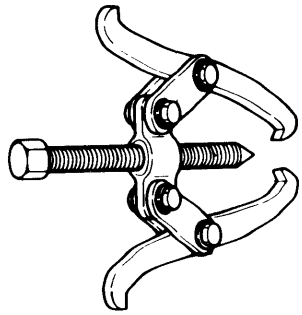 Rocal supply	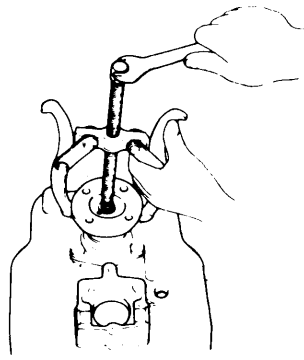 Removing the coupling (2QM20)
Gear puller	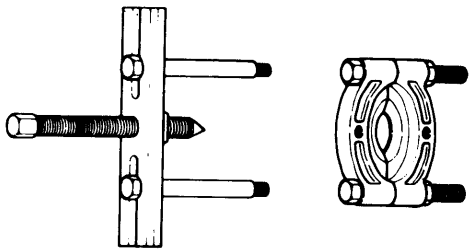 Rocal supply	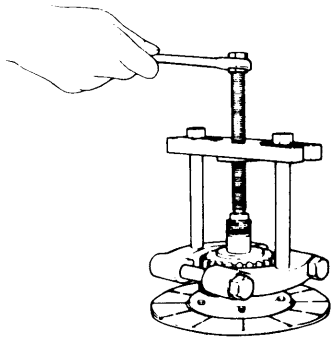 Removing the ahead gear (2QM20)
Output shaft nut wrench for 2QM20H, 3QM30H	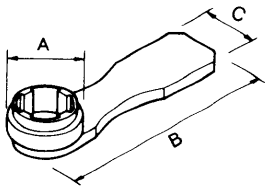	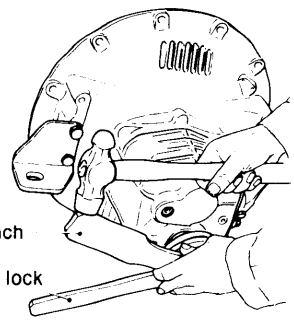 For removing and tightening the output shaft nut.
Output shaft coupling lock for 2QM20H, 3QM30H	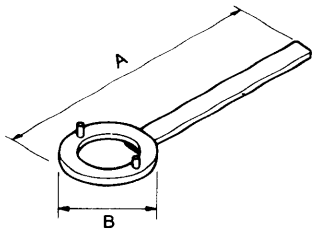	

Model	A	B	C	Code no.
2QM20H	ø55	230	45	177099-09010
3QM30H	ø69	230	60	177090-09100

Model	A	B	Code no.
2QM20H	290	ø100	177099-09020
3QM30H	405	ø120	177090-09140

Name of tool	Shape and size mm	Application
Puller cradle for 2QM20H, 3QM30H	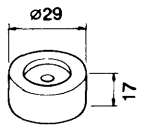 Code no.; 177095-09170	•2QM20H 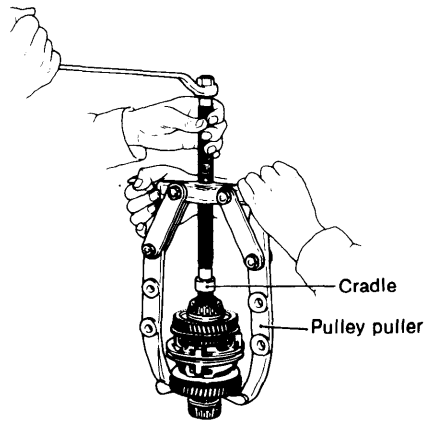 For removing the output shaft when using a pulley puller. •3QM30H For removing the input shaft when using a pulley puller.
Support pipe for spline of input shaft for 3QM30H	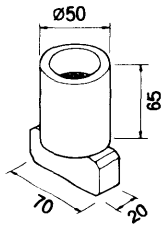 Code no.; 177095-09060	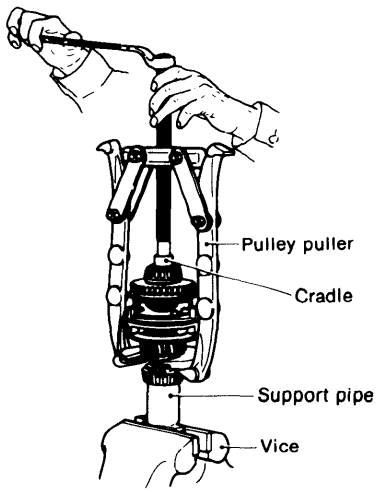 For removing and tightening the crown nut of the input shaft. For installing the thrust bearings, thrust collars and needle bearing inner races of the input shaft.
Special spanner for 3QM30H	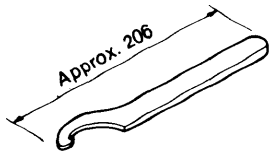 Code no.; 177095-09090	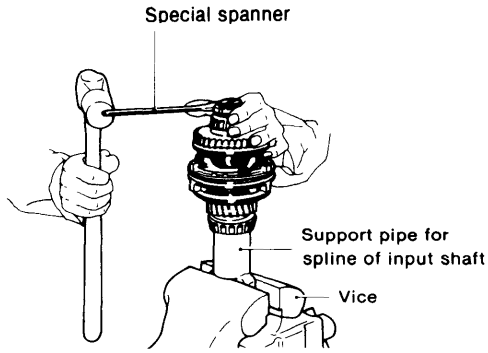 For removing and tightening the crown nut of the input shaft.

Name of tool	Shape and size mm	Application
Pulling support for 2QM20H	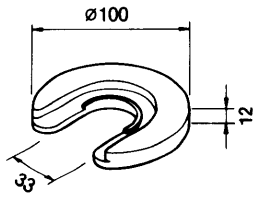 Code no.; 177099-09030	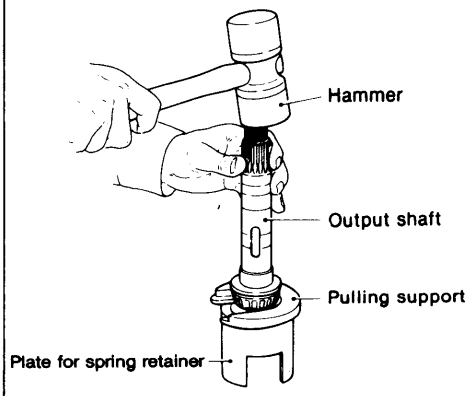 For removing the needle bearing inner race, thrust collar and thrust bearing of the output shaft (forward gear side).
Plate for spring retainer for 2QM20H, 3QM30H	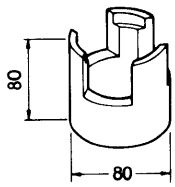 Code no.; 177095-09070	• 2QM20H 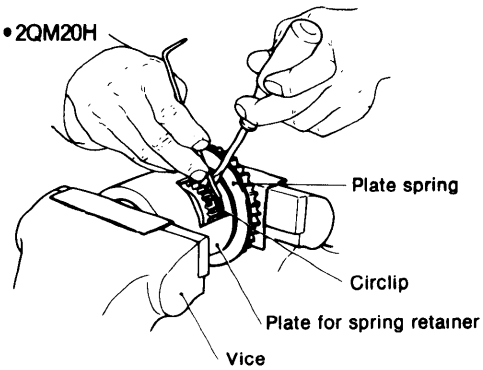 For removing and installing the plate spring, retainer and circlip of the large gears (forward and reverse). • 3QM30H For removing and installing the plate spring, retainer and circlip of the small gears (forward and reverse).
Pulling support for 3QM30H	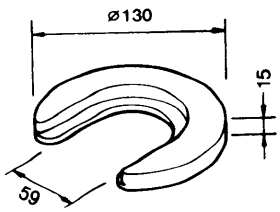 Code no.; 177095-09110	For removing the input shaft.

Name of tool	Shape and size mm	Application
Support plate for 3QM30H	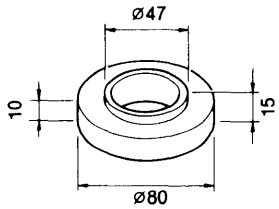 Code no.; 177090-09130	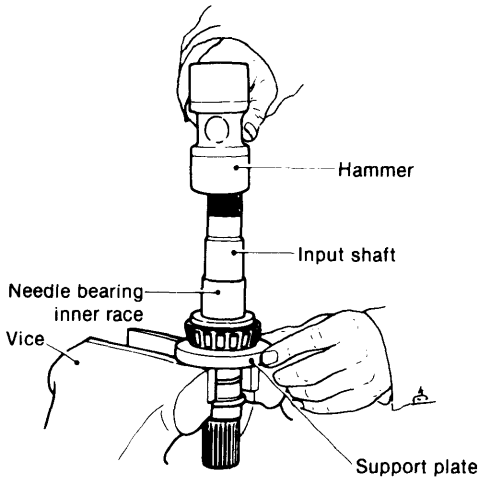 For removing the needle bearing inner race, thrust collar and thrust bearing of the input shaft. (forward gear side)
Assembly spacer for 2QM20H, 3QM30H	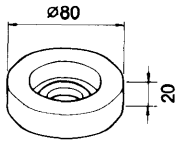 Code no.; 177090-09010	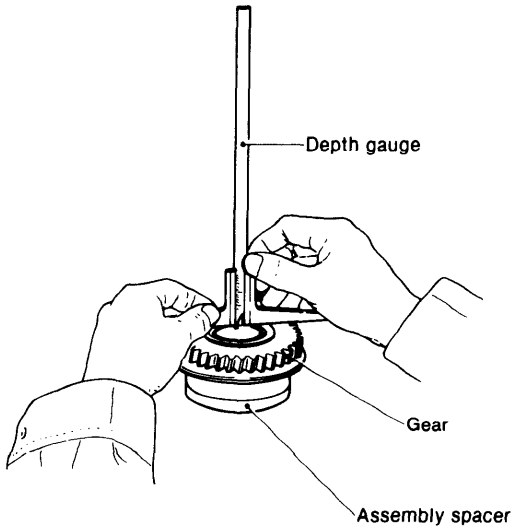 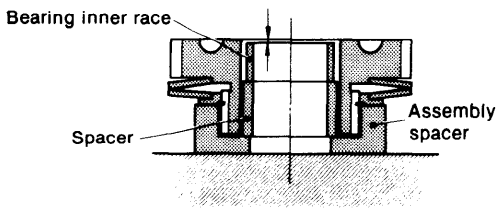 For determining the thickness of the adjusting plate.

Name of tool	Shape and size mm	Application
Inserting tool for 2QM20H, 3QM30H	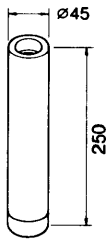 Code no.; 177095-09020	•2QM20H 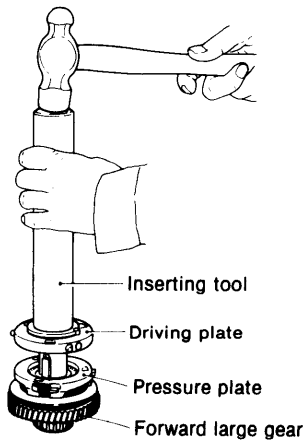 For installing the spacer and needle bearing inner race of the output shaft. (reverse small gear side). •3QM30H 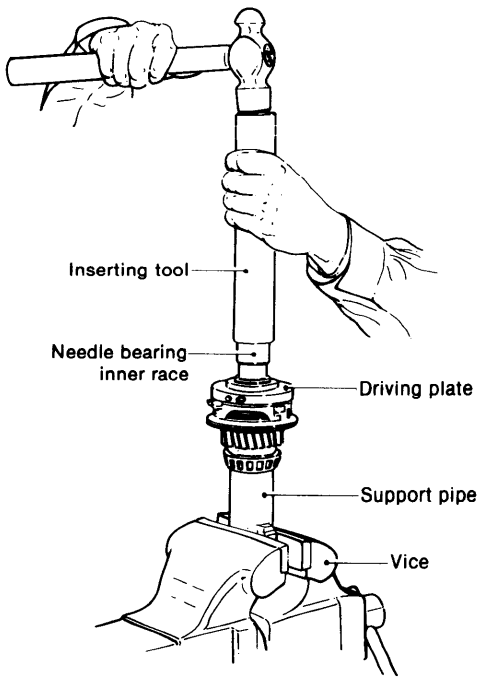 For installing the thrust bearing, thrust collar and needle bearing inner race of the input shaft. (forward small gear side)

Name of tool	Shape and size mm	Application
Inserting tool for 2QM20H, 3QM30H	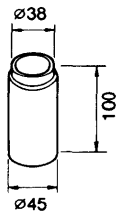 Code no.; 177099-09040	•2QM20H 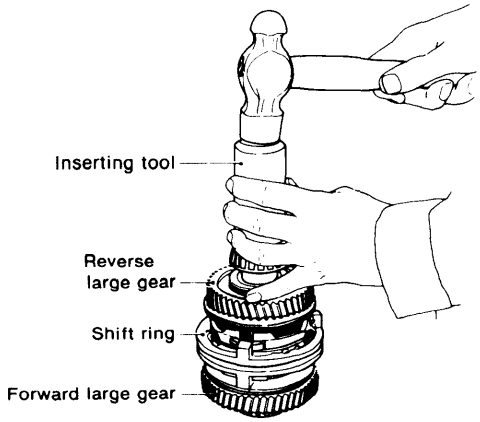 For installing the thrust bearing and thrust collar (reverse large gear side). •3QM30H 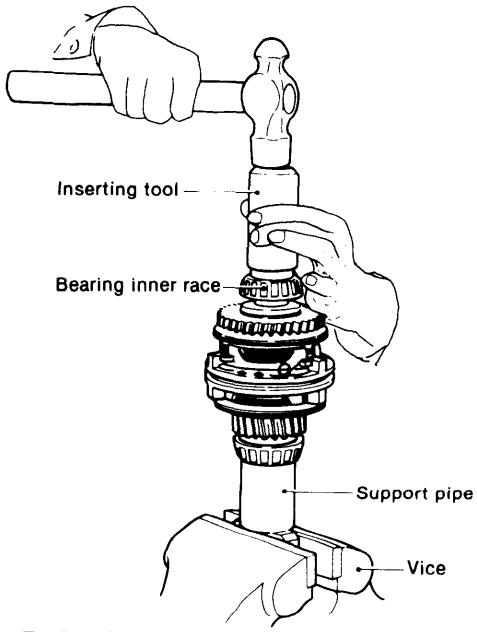 For installing the thrust collar and thrust bearing of the input shaft. (reverse small gear side)

2-3 Measuring instruments

Nomenclature		Accuracy and range
Vernier calipers		1/20 mm, 0 ~ 150 mm,
Micrometer	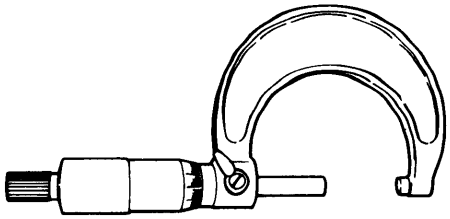	1/100 mm, 0 ~ 25 mm, 25 ~ 50 mm, 50 ~ 75 mm, 75 ~ 100 mm,
Cylinder gauge	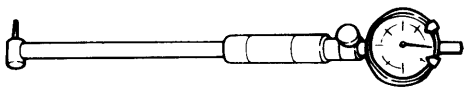	1/100 mm, 18 ~ 35 mm, 35 ~ 60 mm, 50 ~ 100 mm,
Thickness gauge	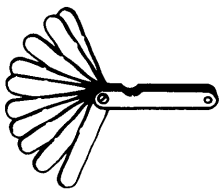	0.05 ~ 2 mm,
Torque wrench	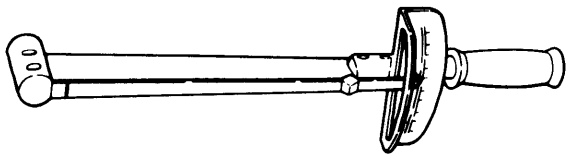	0 ~ 13 kg-m.
Nozzle tester	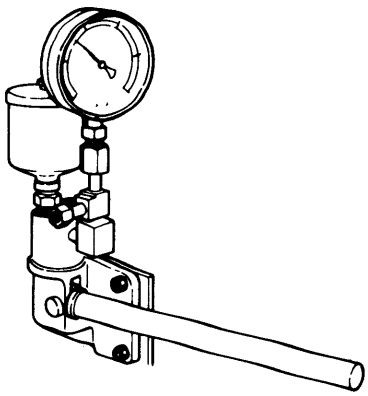	0 ~ 500 kg/cm².

3. Other

Supplementary packing agent

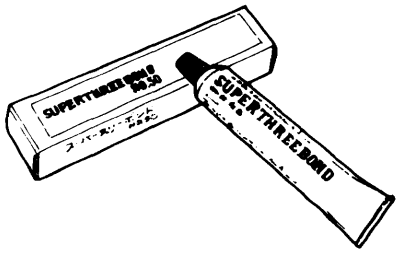

Type	Use
"Three Bond 3B8-005"	White. Since "Three Bond 3B8-005" is a nonorganic solvent, it does not penetrate asbestos sheets made principally or completely of asbestos. Always use it with grey asbestos sheet packing for complete oiltightness. When "Three Bond 3B8-005" is difficult to obtain, use silicone nonsolvent type "Three Bond No. 50."
"Three Bond No. 50"	Grey. Silicone nonsolvent type liquid packing. Semidry type packing agent coated on mating faces to prevent oil and gas leakage. Does not penetrate asbestos sheet and assures complete oiltightness.
"Three Bond No. 1"	Reddish brown. Paste type wet viscous liquid packing. Ideal for mating faces which are removed but reinstalled. Particularly used to prevent water leakage and to prevent seizing of bolts and nuts.

The surface to be coated must be thoroughly cleaned with thinner or benzene and completely dry. Moreover, coating must be thin and uniform.

Products of Three Bond Co., Ltd.

Paint

Color spray

Metallic Ecole Silver is used entirely on this engine.

Wipe· off the surface to be painted with thinner or benzene, shake the spray can well, push the button at the top of the can and spray the paint onto the surface from a distance of 30 ~ 40 cm.

Paint

Type
White paint
(Mixed oil paint)

Usage point
Cylinder liner
insertion hole

Use
Paint parts that contact the cylinder body when inserting the cylinder liner to prevent rusting and water leakage.

Yanmar cleaner

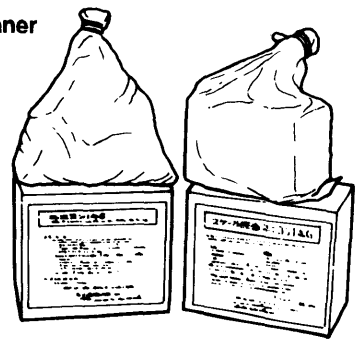

Cooling passage cleaner is made by adding one part "Unicon 146" to about 16 parts water (specific gravity ratio). To use, drain the water from the cooling system, fill the system with cleaner, allowing it to stand overnight (10 ~ 15 hours). Then drain out the cleaner, fill the system with water, and operate the engine for at least one hour.

NEJI LOCK SUPER 203M: a locking agent for screws

For coating on screws and bolts to prevent loosening, rusting, and leaking. To use, wipe off all oil and water on the threads of studs, coat the threads with screw lock, tighten the stud bolt, and allow to stand until the screw lock hardens. Use screw lock on the oil intake pipe threads, oil pressure switch threads, fuel injection timing shim faces, and front axle bracket mounting bolts.

4. Disassembly

4-1. General Precautions

Maintenance and inspection activity should be done as effectively as possible, avoiding unnecessary disassembling except for general overhauls.
At the time of disassembly, record the presence of parts which require repair or replacement, and make arrangements beforehand for procurement of such parts so that problems will not occur during the reassembling operation.

4-2. Disassembly Sequence

4-2.1 Wiring, piping and wires

(1) Remove electrical wiring connected to the engine, piping for water cooling system, piping for fuel oil and remote control wires.
(2) Remove the cooling water and lubricating oil.

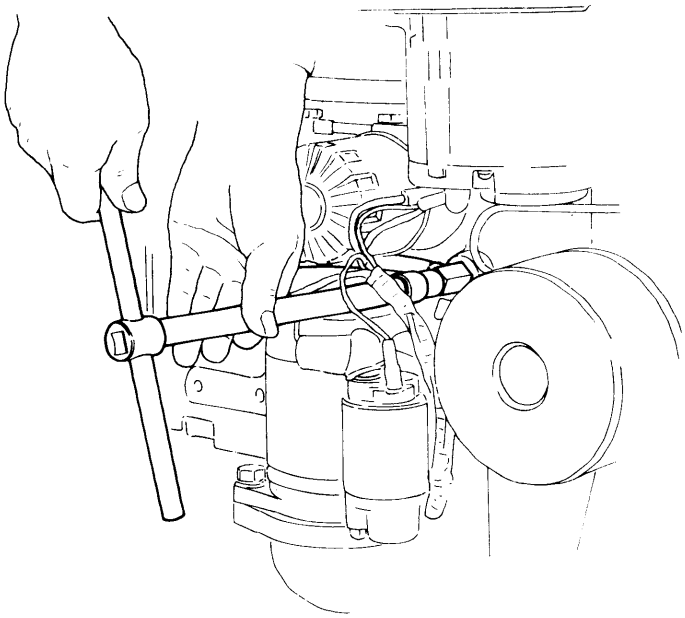

4-2.2 Electrical provisions

(1) Remove the starting motor.
(2) Loosen tension of the alternator, and remove the V-belt.

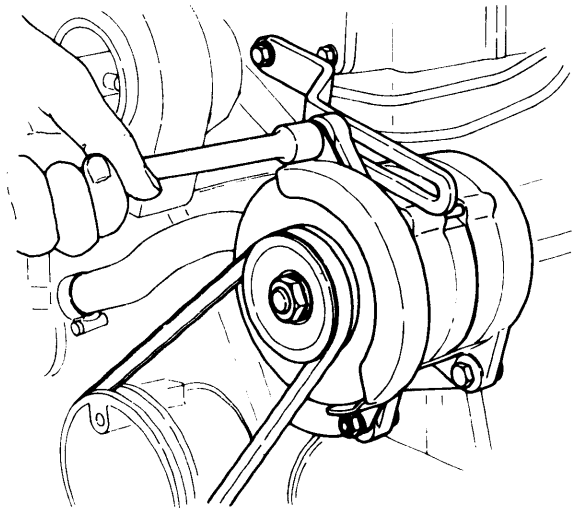

(3) Then remove the alternator, tension adjuster, and bracket.

4-2.3 Fresh water tank

(1) Loosen cooling water pipe clamps.
(2) Remove the fresh water tank.

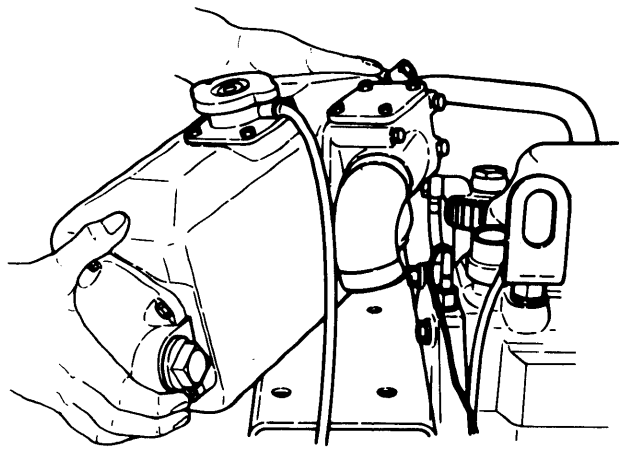

(3) Remove the fresh water tank bracket.

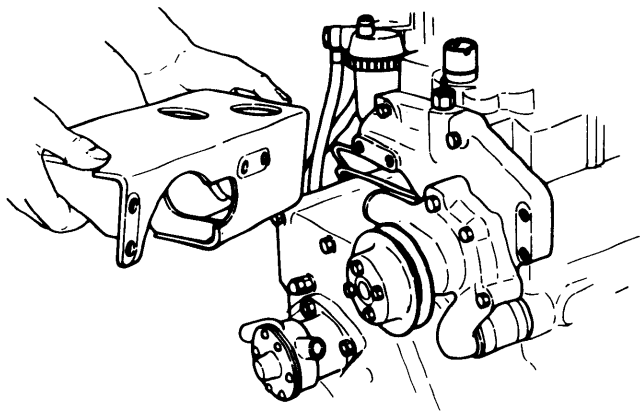

4-2.4 Cooling water pump

(1) Remove the cooling water pipe (pump outlet through cylinder body).
(2) Remove the cooling water pump.

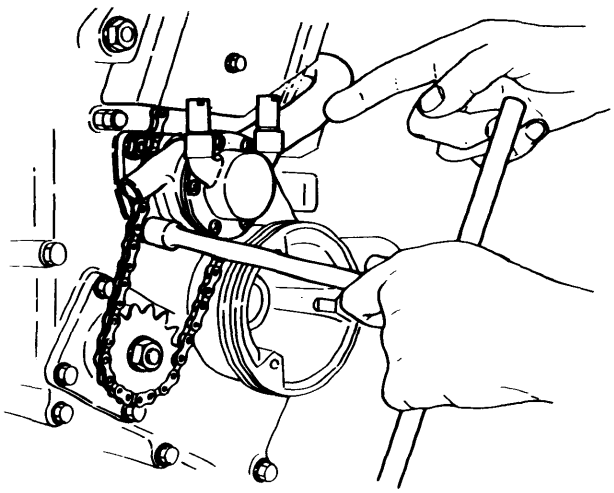

4-2.5 Manual starter

(1) Remove the chain cover.
(2) Loosening the tension, remove the chain and starting shaft.

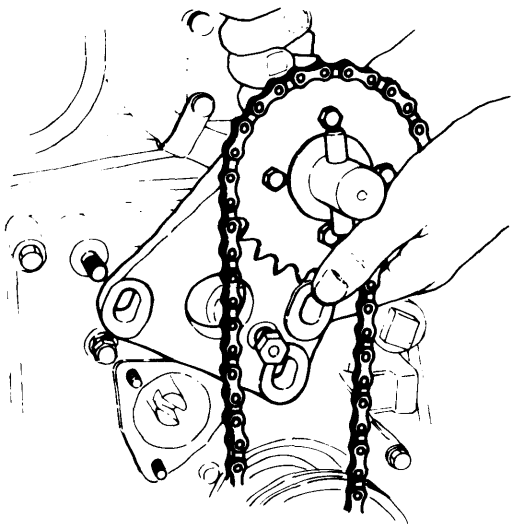

4-2.6 Rocker arm cover

(1) Remove the rocker arm cover together with the air cleaner.

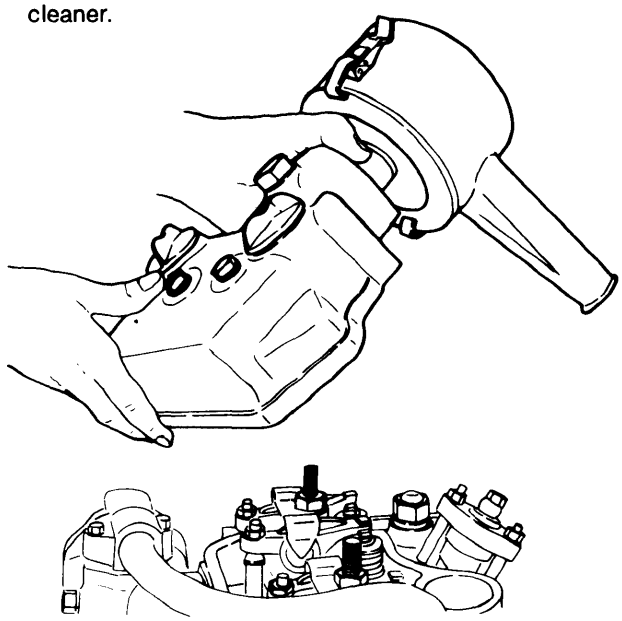

4-2.7 Exhaust manifold

(1) Remove the cooling water pipe located at the sides of the cylinder body and the cylinder head.
(2) Remove the fuel oil pipe (at the filter side).
(3) Remove the exhaust manifold.

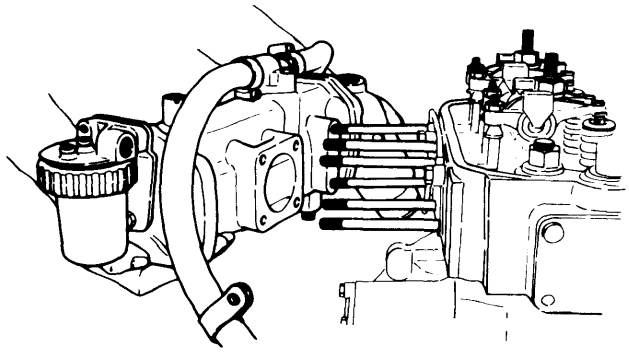

4-2.8 Rocker arm

(1) Remove the rocker arm, then take out the push rod.

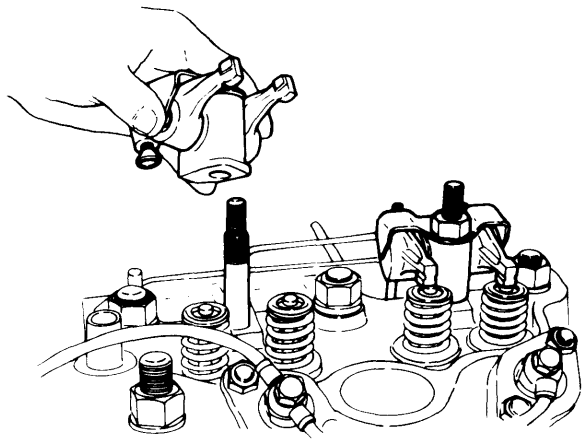

NOTE: Make an indication to distinguish between the first and second cylinders, and between the intake and exhaust.

4-2.9 Cylinder head

(1) Remove the fuel oil injection pipe, fuel oil return pipe and libricating oil pipe.
(2) Remove the cylinder head.

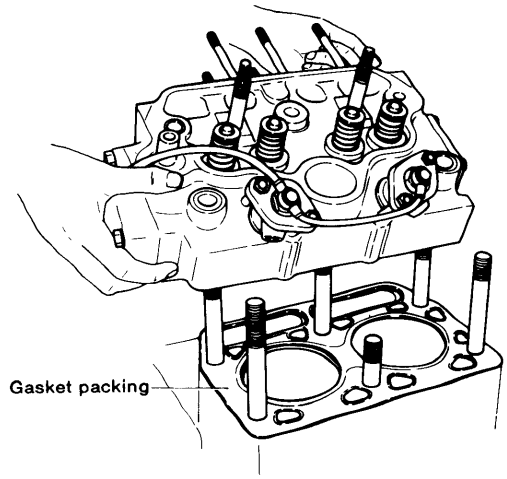

(3) Remove the gasket packing.
NOTE: Make a distinction between its front and back.
(4) Remove the tachometer gear case.

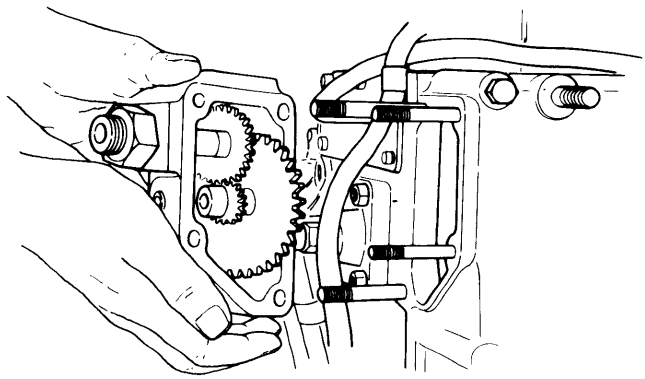

(5) Remove the V-pulley on the crankshaft and the end nut.

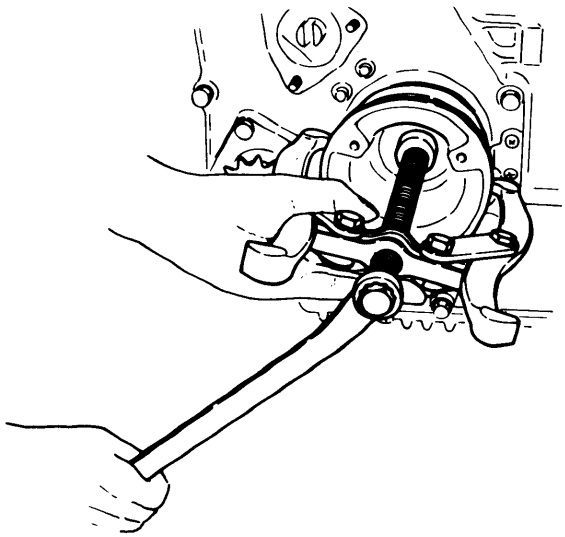

4-2.10 Governor link

(1) Remove the lid attached to the fuel oil injection pump chamber.
(2) Remove the governor link and the regulator spring.

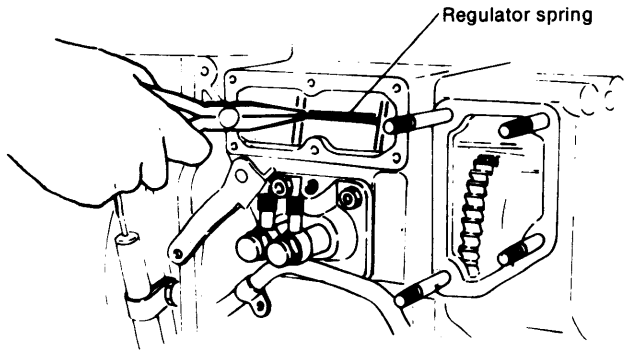

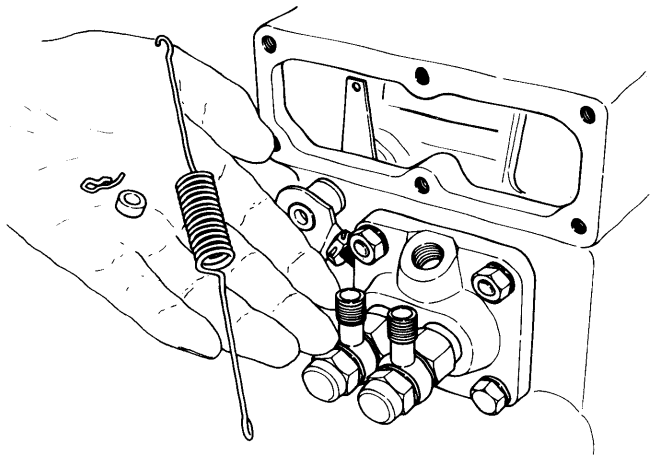

4-2.11 Gear case

(1) Remove the fuel oil feed pump.

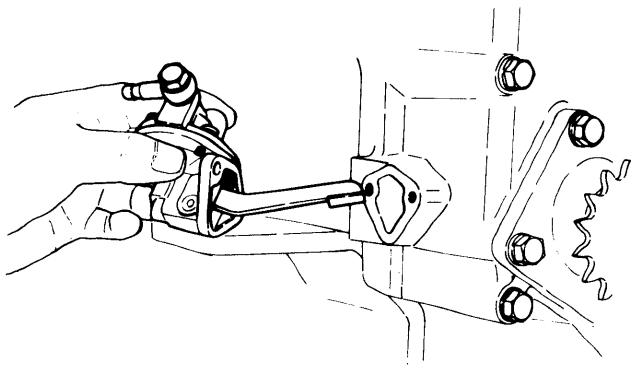

(2) Remove the starting chain sprocket and the lid.

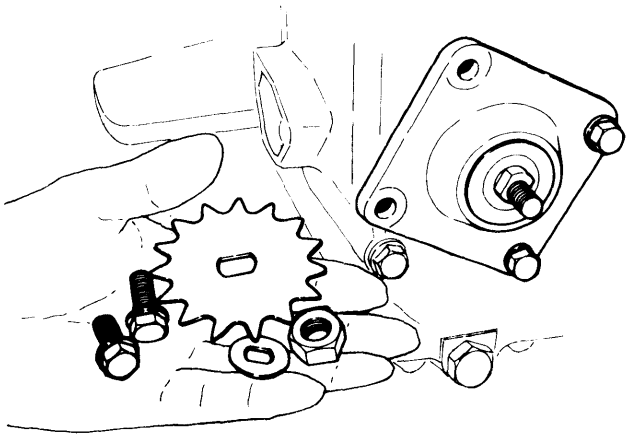

(3) Remove the gear case.

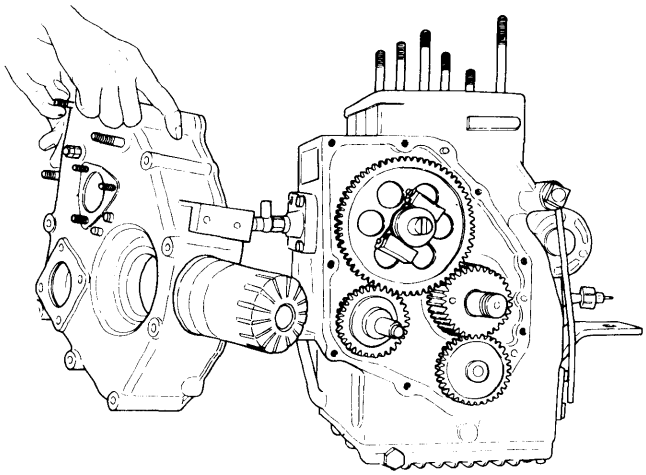

(4) Remove the starting shaft and the gear.

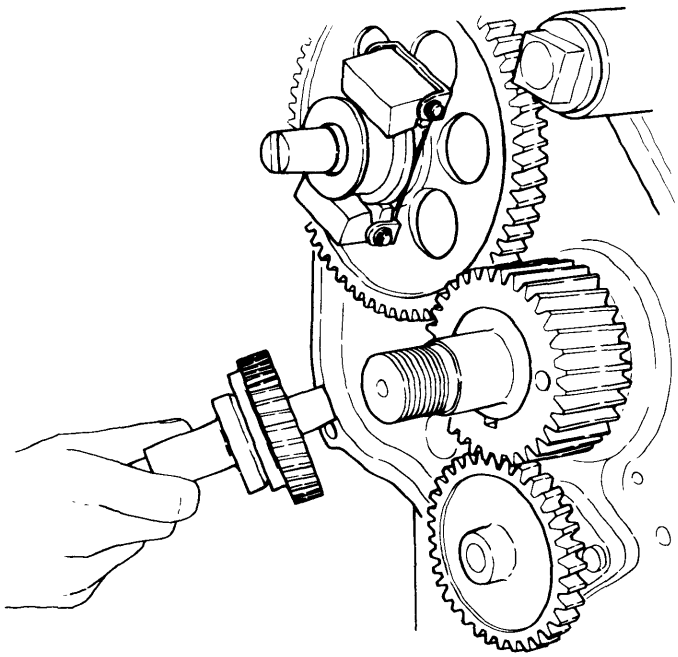

(5) Remove the fuel oil injection pump (injection timing adjusting plate).

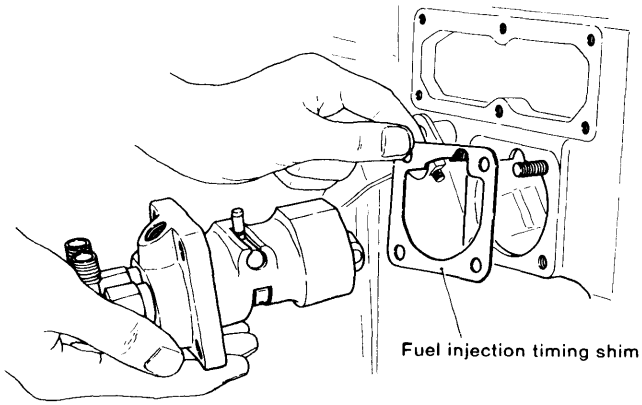

(6) Remove the governor sleeve.

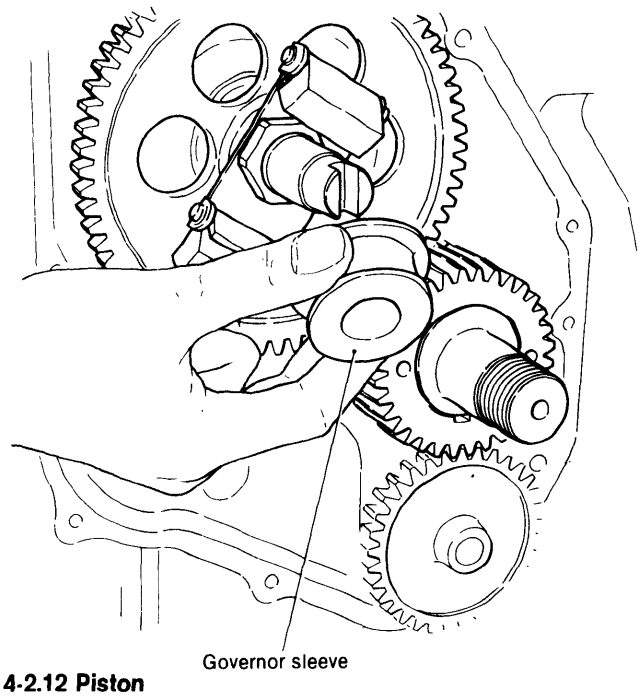

4-2.12 Piston

(1) Remove the oil dipstick.

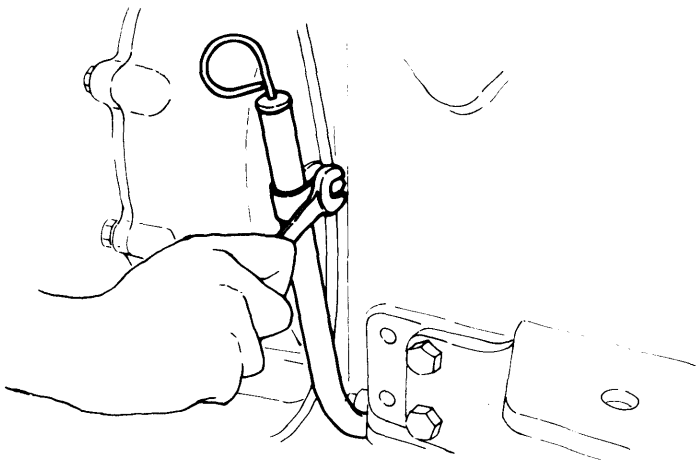

(2) Remove the bottom cover (oil pan).

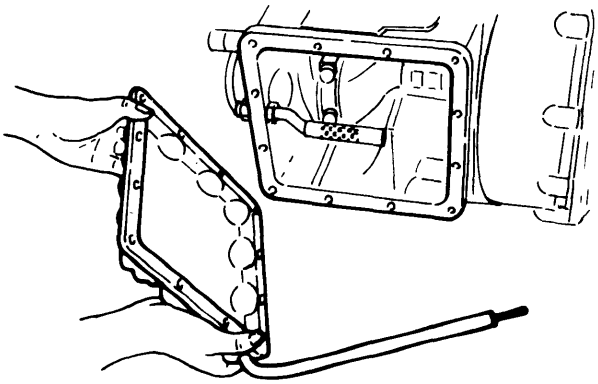

(3) Remove the lubricating oil inlet pipe.

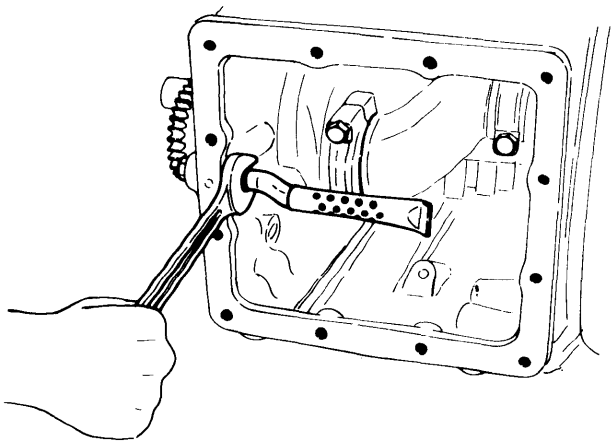

(4) Remove the connecting rod bolt, and then pull out the piston connecting rod assembly.

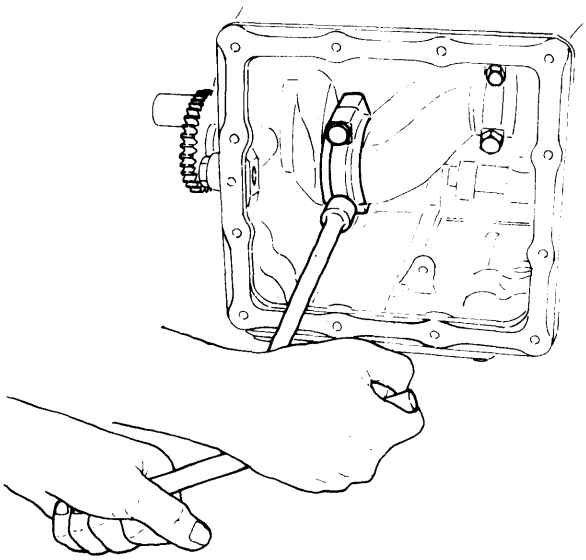

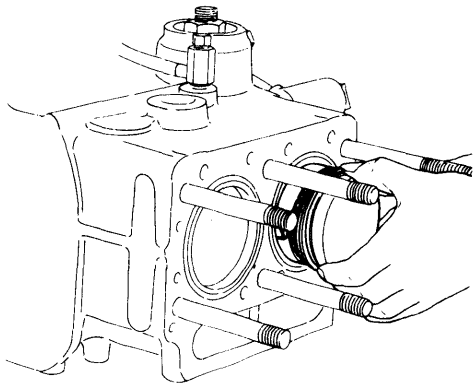

NOTE: Make an indication to distinguish between the first and second cylinders.

4-2.13 Clutch

(1) For model 2QM20, 3QM30

1) Remove the lid of the rear bearing box, then the clutch lever assembly.

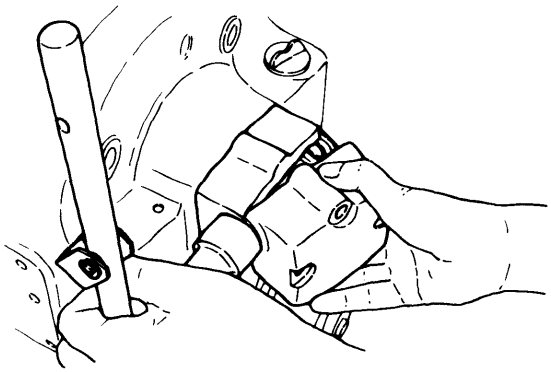

2) Remove the clutch case.

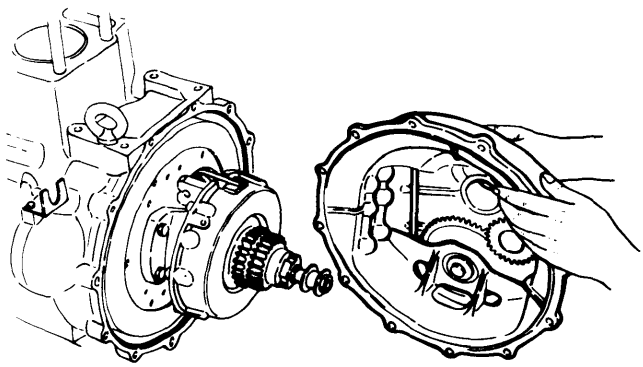

3) Remove the clutch assembly.

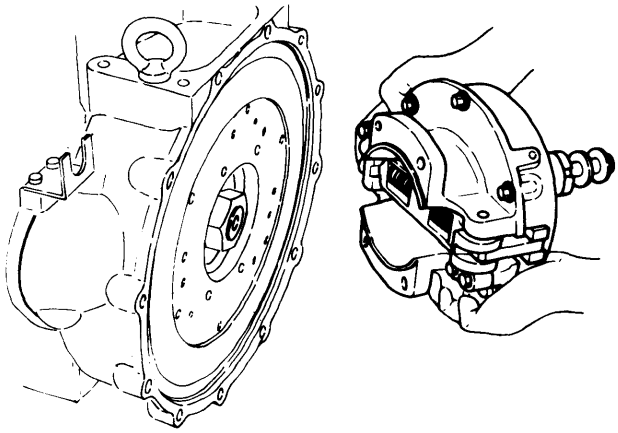

(1) For model 2QM20H, 3QM30H

1) Loosen the mounting flange bolts and remove the clutch assembly.

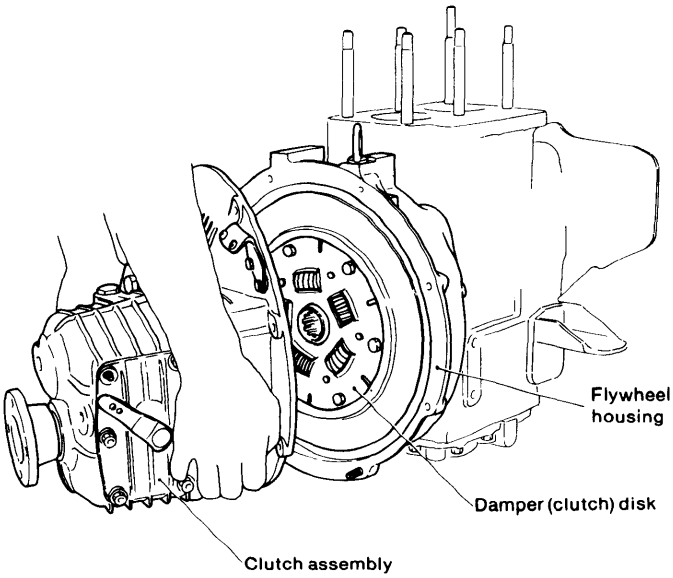

2) Remove the clutch disk from the flywheel.

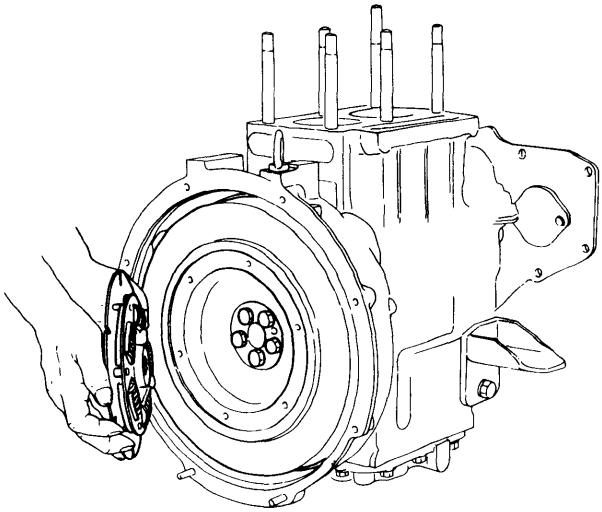

4-2.14 Crankshaft

(1) Remove the flywheel.

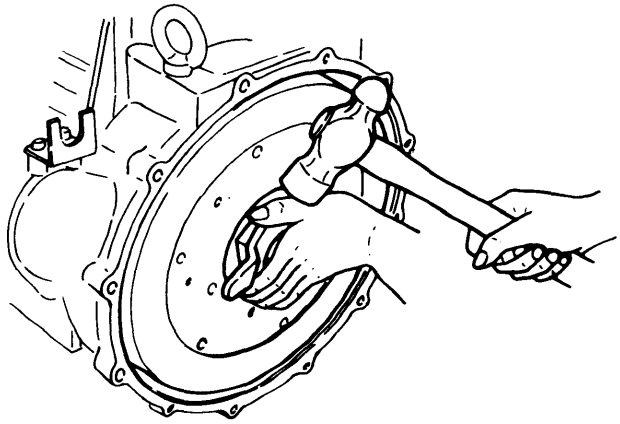

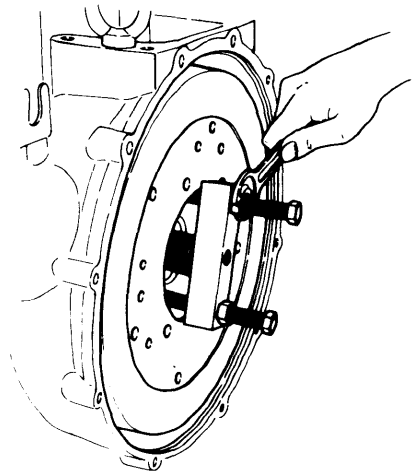

(2) Remove the flywheel housing.

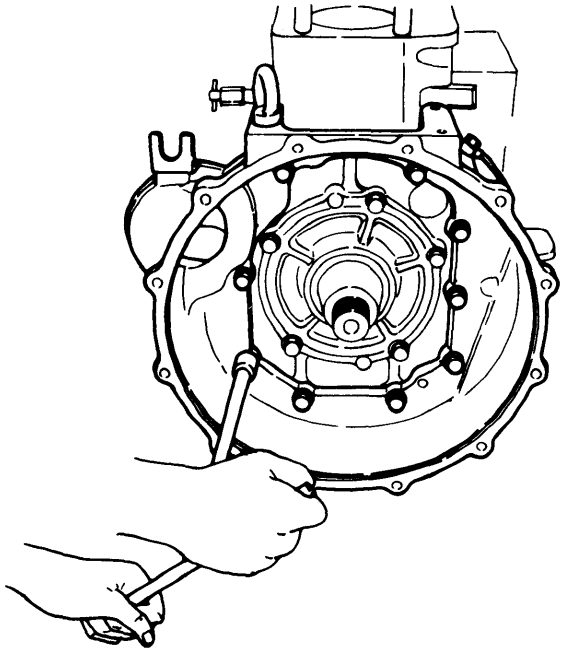

(3) Remove the flywheel key

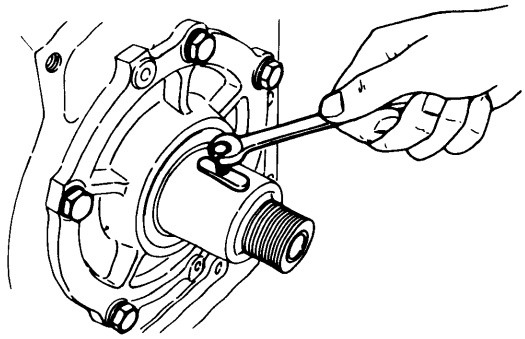

(4) Remove the main bearing body, and push the two mounting bolts through the upper and lower holes.

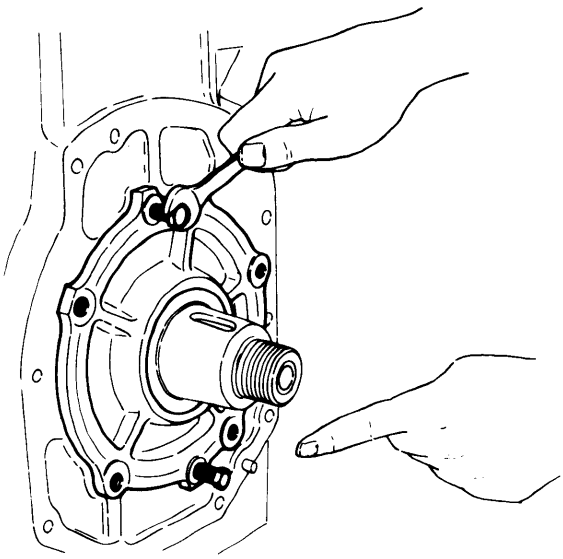

(5) Removing the crank gear, pull out the crankshaft.

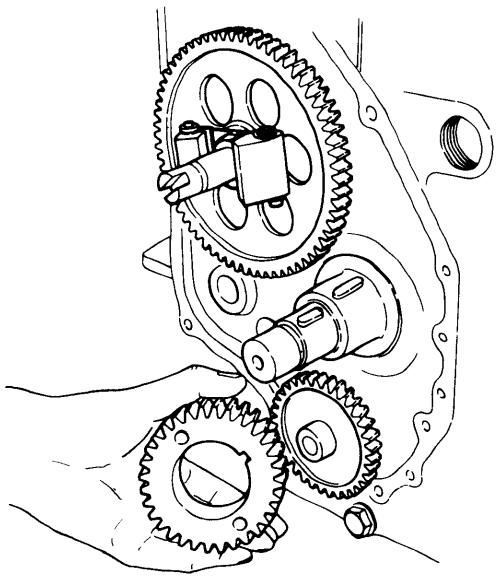

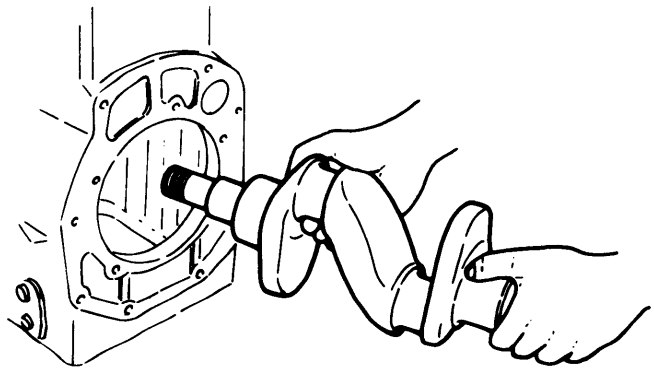

(6) Pull out the cam shaft and the tappet.

NOTE: Make an indication to distinguish between the first and second cylinder, and between the intake and exhaust.

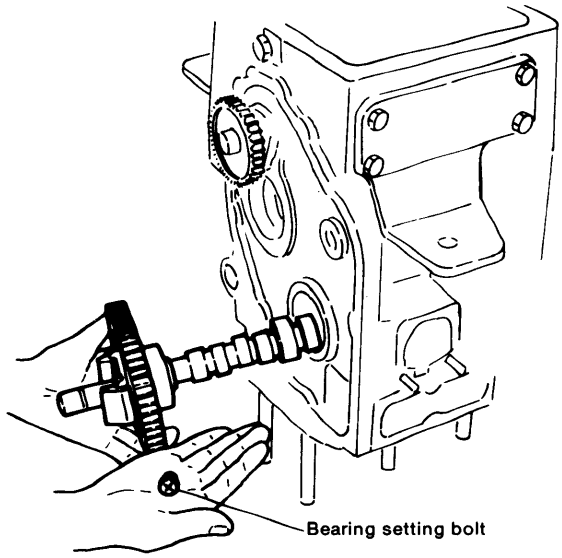

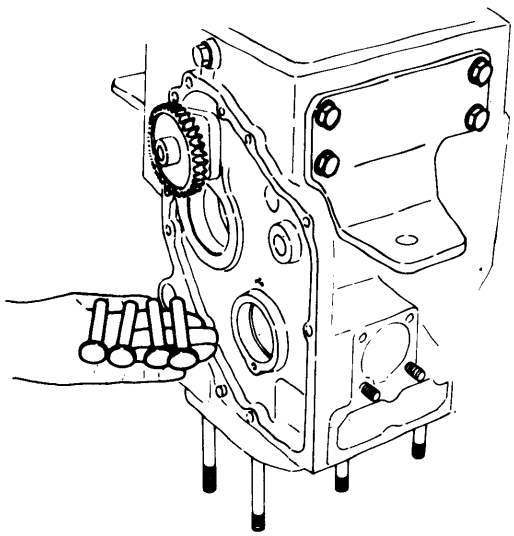

(7) Remove the lubricating oil pump.

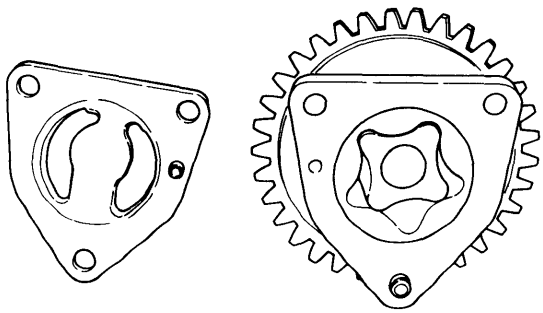

5. Reassembly

5-1. General Precautions

Warped washers and packings must necessarily be replaced with new ones.
In assembling, sealing must be applied to all designated parts. Omission may cause serious trouble during a trial running of the engine after completion of reassembly. Adjustments should be performed in accordance with the instructions given.
After completion of engine reassembly, recheck any deficiencies which might have appeared during maintenance and inspection, conduct a trial running of the engine and then submit it to the user.

5-2. Reassembly sequence

5-2.1 Lubricating oil pump

(1) Replace the lubricating oil pump.

5-2.2 Tappet

(1) Insert the tappet, making sure that the first and second cylinders, and the intake and exhaust are properly distinuished.

5-2.3 Camshaft

(1) Insert the camshaft.
(2) Placing the wooden fitting on the camshaft, drive it in with a hammer.

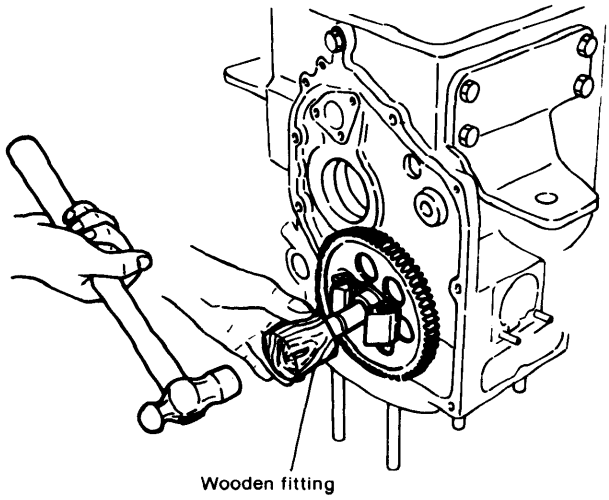

(3) After checking for smooth turning, tighten the ball bearing setting bolts.

5-2.4 Crankshaft

(1) Insert the thrust metal into the gear case side, directing the portion with the oil gutter towards the crankshaft.

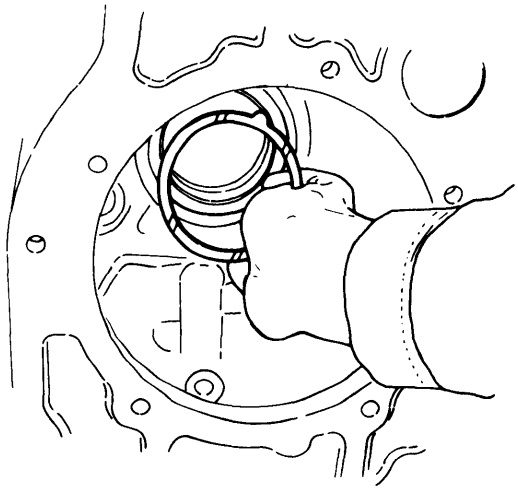

NOTE: Take special care regarding the protruding portion.

(2) Insert the crank shaft.
(3) Fit the main bearing.
NOTE: Check the thrust metal, paper packing and oil seal.

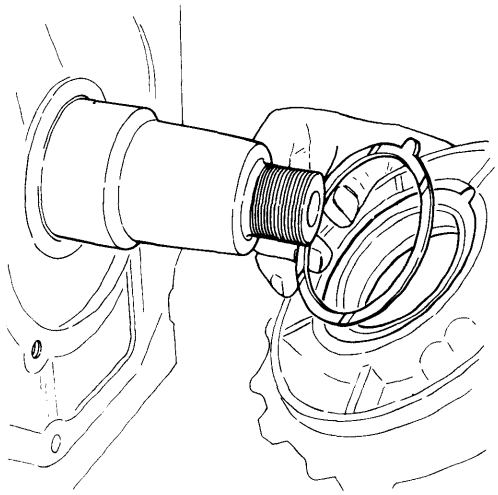

(4) Fit the crank gear.
NOTE: Arrange so that the timing marks (0 mark) match up.

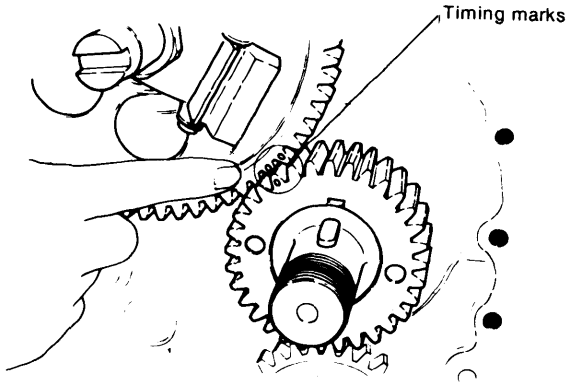

5-2.5 Flywheel

(1) Fit the flywheel housing.
- Paper packing.

(2) Fit the flywheel key.
(3) Fit the flywheel.
NOTES: 1) Fasten the end nut tightly.
2) Do not strike the flywheel.

5-2.6 Clutch

(1) For model 2QM20, 3QM30
1) Install the clutch housing.

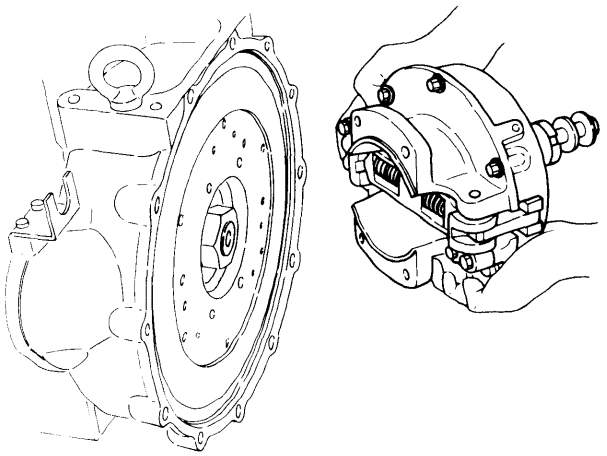

2) Install the clutch case.
3) Install the operating lever housing.
4) Fit the cover of the rear bearing box.
NOTE: Check the needle for neutral setting and its spring.
(2) For model 2QM20H, 3QM30H
1) Install the clutch disc on the flywheel.

Tightening torque	2.5 kg•m (18 ft•lb)

2) Align the disc and input shaft spline, and install the clutch assembly on the mounting flange.

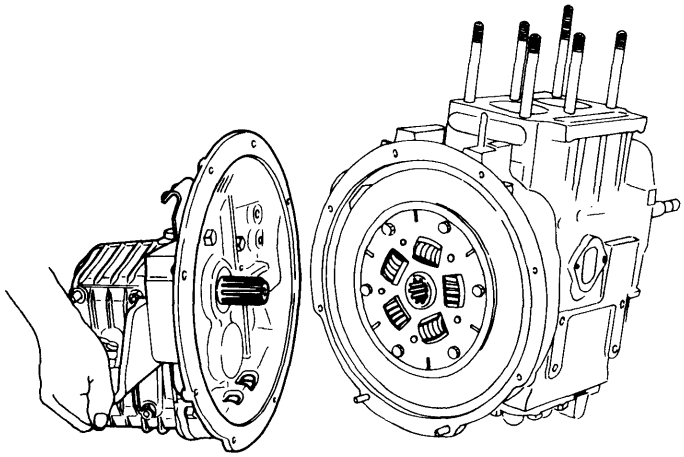

Tightening torque	2 ~ 2.5 kg•m (14.5 ~ 18 ft•lb)

NOTE: When replacing parts of the clutch case of flywheel housing, or if the deviation of alignment of the clutch case hole against the core of the crank shaft is in excess of 0.2mm.

5-2.7 Pistons

(1) Insert a piston.
NOTES: 1) Confirm the presence of the crank pin metal.
2) Identifying the number marked on the larger end of the connecting rod, rod towards the injection pump side.

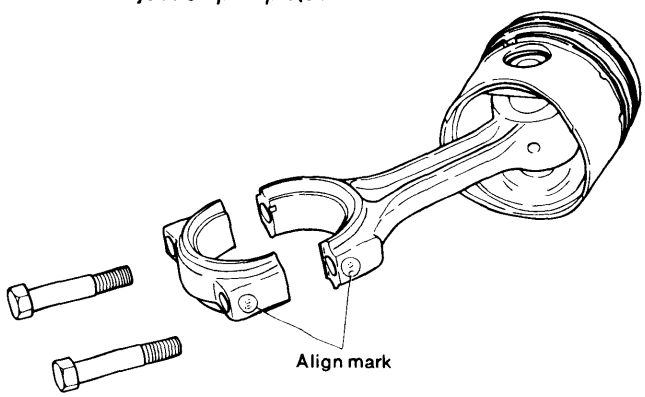

3) The relation among the four piston rings is as in the following figure:

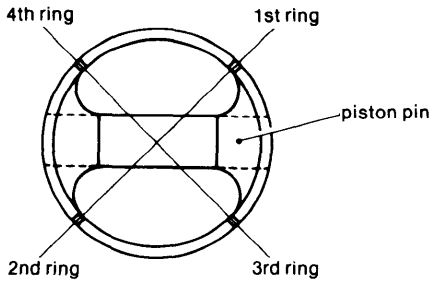

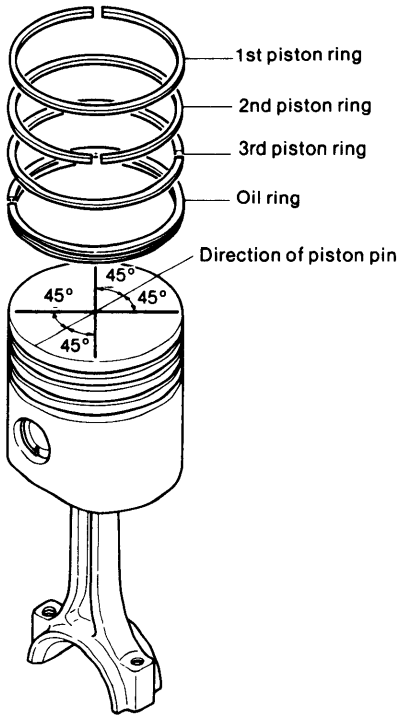

4) Clearly distinguish the first cylinder and the other cylinder.

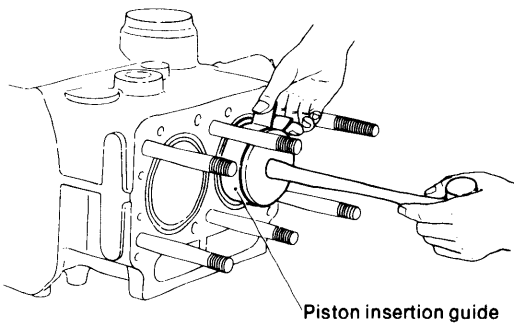

(2) Tighten the connecting rod bolt.

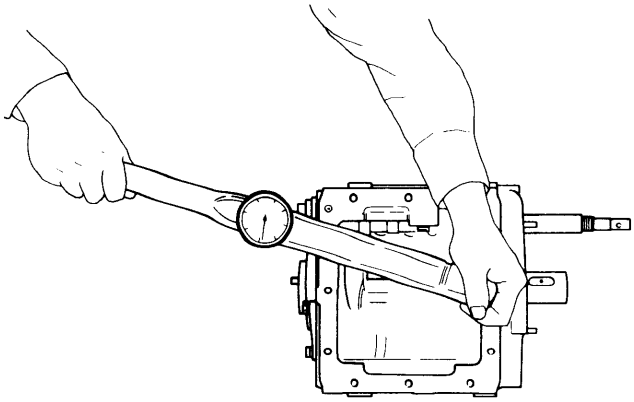

Tightening torque	5.5 ~ 6.0 kg•m (39.9 ~ 43.4 ft•lb)

5-2.8 Bottom cover (oil pan)

(1) Attach the lubricating oil inlet pipe.
(2) Install the oil pan with paper packing in place.

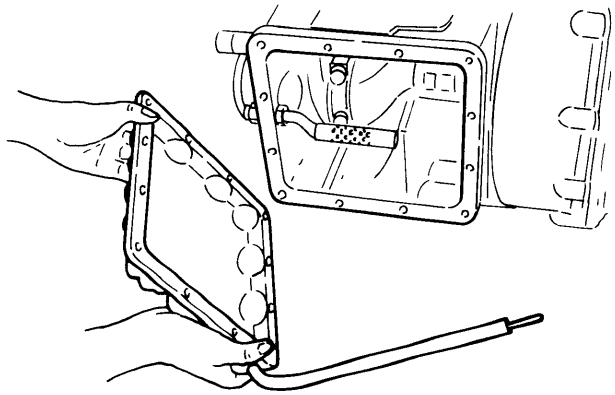

Tightening torque	2.4 ~ 2.9 kg•m (17.4 ~ 21 ft•lb)

(3) Install the oil dipstick pipe with copper packing in place.

5-2.9 Fuel pump

(1) Install the fuel oil injection pump.

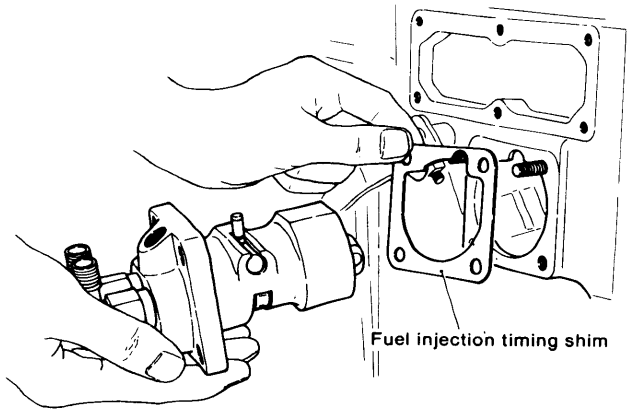

NOTE: Injection timing adjusting plate.

Tightening torque	2.0 ~ 2.5kg•m (14.5 ~ 18.1 ft•lb)

5-2.10 Gear case

(1) Insert the starting shaft and the gear.

(2) Attach the governor sleeve.

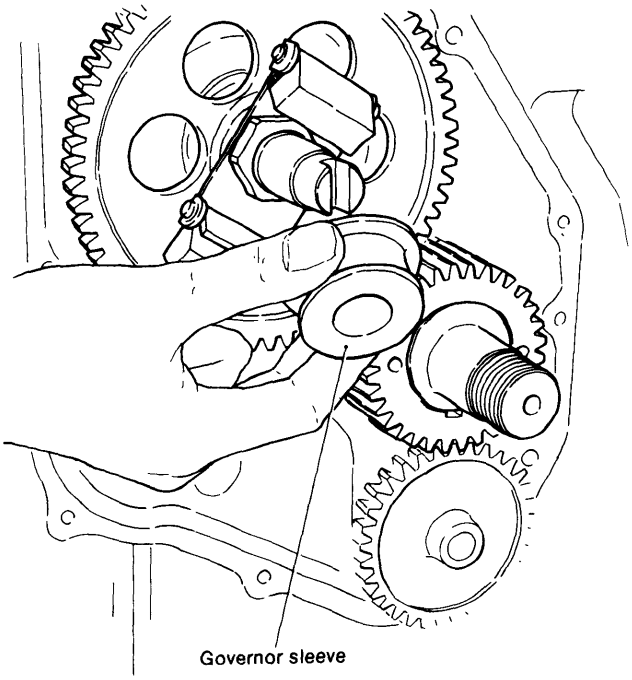

(3) Install the gear case and the V-pulley for the crankshaft.

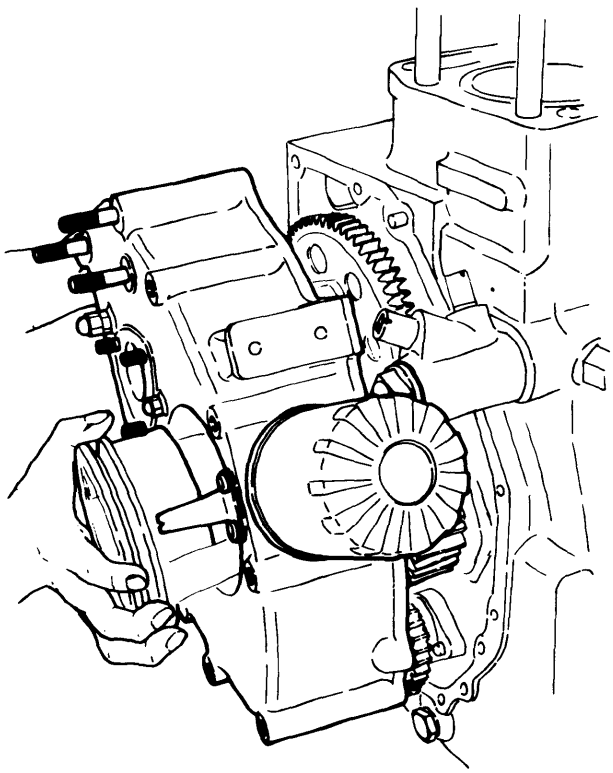

NOTE: In order to protect the lip of the oil seal, after fixing the gear case to the V-pulley, the assembled unit should be installed on the engine body.
- *End nut*
- *Paper packing*

(4) Attache the starting chain sprocket and its lid with paper packing.
(5) Install the fuel feed pump with paper packing.

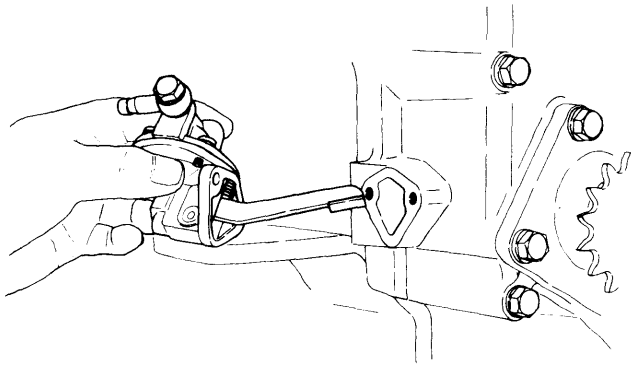

(6) Connect the governor link and the regulator spring.
(7) Attach the lid of the fuel oil injection pump chamber with paper packing.
(8) Attach the tachometer gear case with paper packing in place.

5-2.11 Cylinder head

(1) Place the gasket packing, confirming which is front and back.

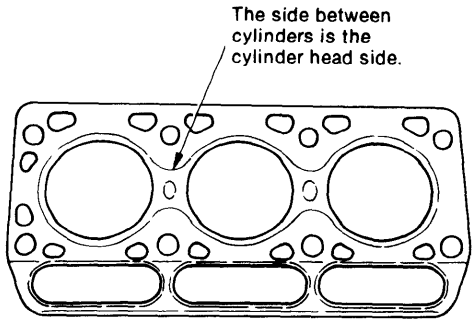

(2) Install the cylinder head.

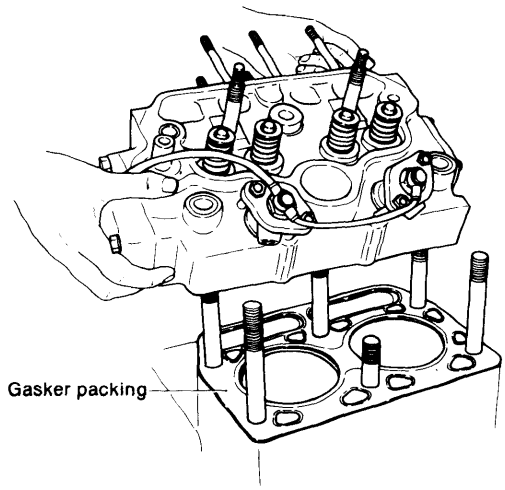

Tightening torque	18 ± 1.5 kg•m (119 ~ 141 ft•lb)

NOTE: When tightening the nuts, tighten them diagonally in turn from inside to outside.

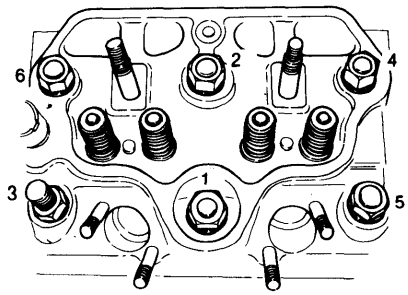

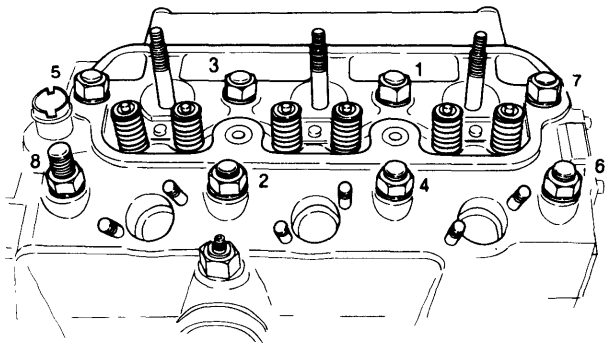

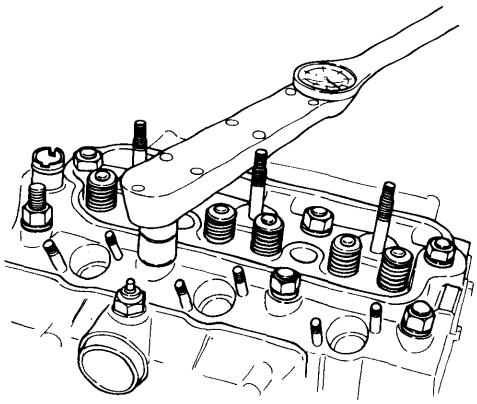

(3) Attach the fuel oil injection pipe, fuel oil return pipe and lube oil pipe with copper packing inserted.

5-2.12 Rocker arm

(1) Insert the valve thrusting rods, confirming the distinction between the first and second cylinders and the intake & exhaust.
(2) Attach the valve arms, confirming the distinction between the first and other cylinders.

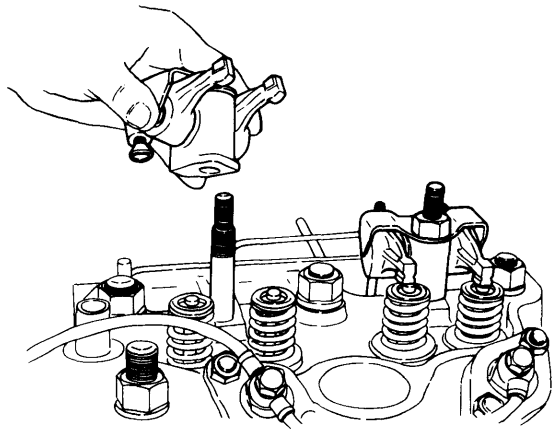

(3) Adjust the intake and exhaust valve head clearance and lock with the nut.

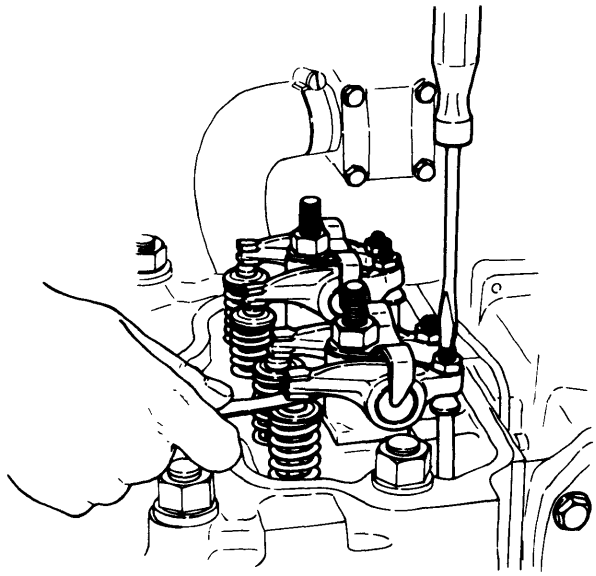

mm (in.)

Intake and exhaust valve head clearance (engine cold):	0.15 (0.0059)

5-2.13 Exhaust manifold

(1) Install the exhaust manifold with gasket packing inserted.
(2) Attach the fuel oil pipe.
(3) Attach the cooling water pipe.

(4) Install the valve arm chamber with copper packing inserted.

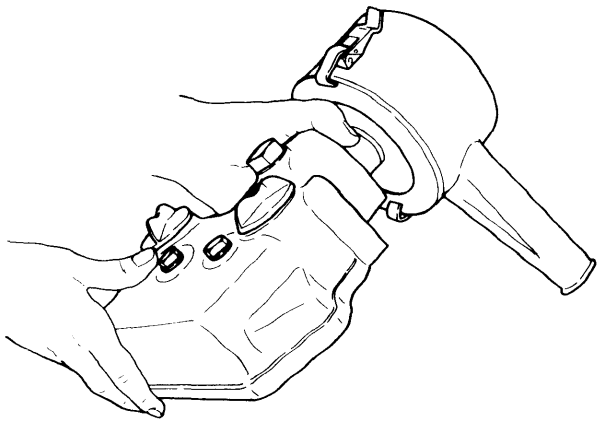

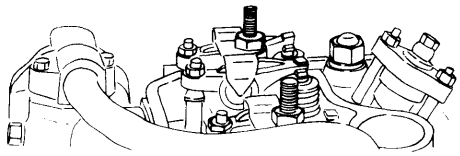

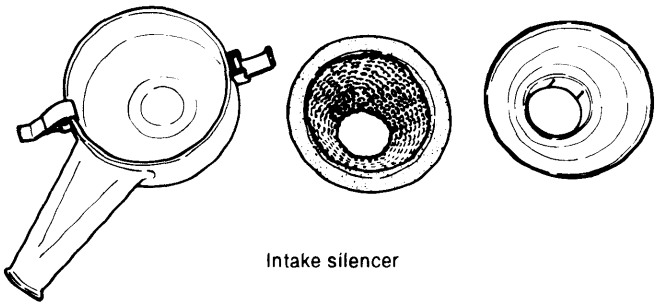

5-2.14 Manual starter

(1) Attach the chain and the starting shaft.
(2) Attach the chain cover.

5-2.15 Cooling water pump

(1) Attach the cooling water pump.
- Paper packing.

(2) Attach the cooling water pipe.

5-2.16 Electrical provisions

(1) Attach the alternator, tension and bracket.
(2) Attach the V-belt and adjust so that a sag of about 10 to 15mm results when pushing by hand on the center of the belt.
(3) Install the starter motor.

Tightening torque	5.0 ~ 6.0 kg•m (36.2 ~ 43.4 ft•lb)

(4) Connect all wiring and piping required for electrical cooling water, fuel oil and remote control systems.

6. Tightening Torque

The bolts and nuts used in this engine employ ISO general metric threads stipulated in JIS (Japanese Industrial Standards). Pay careful attention to the thread dimensions when replacing bolts and nuts.
Tighten the bolts and nuts to the tightening torque given in the table below.

6-1 Main bolt and nut tightening torque.

Part	Diameter of thread (mm)	Tightening torque (kg·m)	Remarks
Cylinder head tightening nut	M15	18±1.5	
Connecting rod bolt	M10	5.5 ~ 6.0	
Intermediate main bearing bolt	M10	6.5 ~ 7.0	3QM30 (H)
Intermediate main bearing set bolt	M10	8.0	3QM30 (H)
Mounting bolt for main bearing body	M10	3.0 ~ 4.0	
Mounting bolt for flywheel	M10	9.5 ~ 10.5	3QM30 (H)
Mounting nut for flywheel	M36	40.0	2QM20 (H)
Mounting bolt for crankshaft pulley	M10	8.3 ~ 9.9	3QM30 (H)
Mounting nut for crankshaft pulley	M30	14.0 ~ 15.0	2QM20 (H)
Mounting bolt for gear case	M8	2.4 ~ 2.9	
Mounting bolt for bottom cover	M8	2.4 ~ 2.9	
Mounting nut for fuel oil injection pump	M8	2.0 ~ 2.5	
Mounting nut for starter motor	M12	5.0 ~ 6.0	
Fixing nut for camshaft gear	M24	6.0 ~ 8.0	
Mounting nut for valve arm support	M10	7.0 ~ 8.0	
Mounting bolt for mounting flange	M10	4.7 ~ 5.7	
Mounting bolt for engine legs	M12	4.5 ~ 5.5	
Mounting nut for clutch legs	M10	4.0 ~ 5.0	
Mounting bolt for friction plate housing	M10	4.0 ~ 5.0	2QM20, 3QM30
Tightening bolt for friction plate	M8	2.0 ~ 2.5	2QM20, 3QM30
Tightening nut for ahead shaft	M25	10.0 ~ 12.0	2QM20, 3QM30
Tightening nut for intermediate shaft	M16	8.0 ~ 10.0	2QM20, 3QM30
Tightening nut for large gear	M35	22.0 ~ 27.0	2QM20, 3QM30
Tightening nut for output shaft coupling	M20	10.0 ~ 12.0	2QM20, 3QM30
Mounting nut for clutch housing	M10	4.5	2QM20 (H), 3QM30 (H)
Tightening nut for output shaft coupling	M24	9.5	2QM20 (H)
	M33	100	3QM30(H)
Tightening nut for input shaft		9.5	2QM20 (H), 3QM30 (H)
Tightening nut for flexible coupling	M10	4.0 ~ 5.0	
Tightening nut for slit type coupling	M10	3.0 ~ 4.0	

6-2 General bolt and nut tightening torque

kg·m

Diameter of thread	General bolts		Pipe joint bolts
	4 T	7 T	
M6	0.6±0.1	0.9±0.1	—
M8	1.5±0.2	2.50.2	1.2 ~ 1.7
M10	3.0±0.3	4.7±0.3	—
M12	5.0±0.5	8.0±0.5	2.5 ~ 3.5
M14	8.0±0.5	13.0±0.5	4.0 ~ 5.0
M16	13.0±0.5	20.5±0.5	5.0 ~ 6.0

7. Packing Supplement and Adhesive Application Points

The packing used in this engine is asbestos sheet sealed at both mating faces.
Be sure to use the correct supplement in accordance with the below table.

Location	Packing (coated)	Packing agent and adhesive
Cylinder head	Both sides of cylinder head side cover packing Cylinder head top and bottom casting sand hole plug Rocker arm chamber packing (rocker arm chamber side) Both sides of cylinder head gasket packing Intake and exhaust manifold bolt threads Exhaust manifold stud bolt thread Rocker arm support stud bolt Cooling water outlet joint threads	"Three Bond No. 4" "Three Bond No. 50" "Screw Lock Super 203M" "Screw Lock Super 203M"
Timing gear	Both sides of timing gear case packing Both sides of fuel injection timing adjustment shims Both sides of governor chamber packing Governor drive shaft bearing cover packing	"Three Bond 3B8-005" "Screw Lock Super 203M" "Three Bond 3B8-005"
Cylinder block	Both sides of oil pan packing Outside surface of cylinder liner Cooling water pipe joint threads Lubricating oil suction pipe threads Lubricating oil intake pipe blind plug threads Oil pressure regulator valve threads Oil pressure switch threads Cylinder head bolt stud Mounting flange face Lube oil pump face Both sides of bushing shell packing Both sides of dipstick flange packing Both sides of fuel pump packing	"Three Bond 3B8-005" White paint "Three Bond No. 20" "Screw Lock Super 203M" "Three Bond 3B8-005"
Crankshaft, piston	Crankshaft V-pulley key groove tightening section Connecting rod bolt threads	"Three Band 3B8-005"
Cooling system	Both sides of water pump packing Both sides of water pump packing Anticorrosion zinc flange threads Water temperature switch threads Water drain joint (cylinder, exhaust pipe)	"Three Bond No. 2" "Three Bond No. 4"
Clutch system	Mounting flange face Clutch housing face	

CHAPTER 15

INSPECTION AND SERVICING

1. Periodic Inspection and Servicing 15-1

1. Periodic Inspection and Servicing

Periodic inspection and servicing is necessary to keep the engine in top condition at all times.
The routine inspection period depends on engine application and usage conditions, fuel and lubricating oil quality, engine handling, etc., and cannot be definitely stated. However, a general guideline will be given here. The relationship between inspection and maintenance activities and operating time is given below.
Refer to pertinent inspection sections of this manual for details.

1. Perform inspection at the operating times given below, and quickly correct any defects found.
2. Before reusing disassembled parts, check that they are in good condition.

1-1 Routine inspection

Items	Procedure \ Operating hours		Daily	Every 50 hours	Every 100 hours	Every 250 hours	Every 300 hours	Every 500 hours	1 year or 1500 hours	Every 2000 hours	Every 3000 hours
Fuel	Check fuel level. Replenish		○								
	Remove condensation from fuel tank.		○ (Before replenishment)								
	Clean fuel filter and remove condensation			○							
	Replace fuel filter element					○					
Lubricating oil	Check oil level. Replenish in crank case and clutch case		○								
	Change oil in crank case				○ [The first change is to be made 50 Hrs after starting of the newly installed engine.]						
	Change oil in clutch case.					○ [The first change is to be made 50 Hrs after starting of the newly installed engine.]					
	Replace lub. oil filter						○ [The first change is to be made 50 Hrs after starting of the engine newly installed.]				
Cooling system	Clean thermostat					○					
	Check and replace anticorrosive zinc							○			
	Sea water pump	Drain	○								
		Check cooling water circulation	○								
		Check pump impeller						○			
		Water pump disassembly and inspection									
	Fresh water pump	Check and refill	○								
		Adjust water pump drive belt tension					○				
		Check cooling pipe in heatexchanger				○					
		Check cooling water pump						○			
Governor	Overhaul check of major components									○	
	Check and adjust governor linkage					○					
Fuel injection pump	Check injection timing							○			
	Check delivery valve							○			
	Overhaul check of major components									○	
Fuel injection valve	Check spray condition							○			
	Check and adjust injection pressure							○			
	Overhaul cleaning of injection valve							○			

Items	Procedure \ Operating hours	Daily	Every 50 hours	Every 100 hours	Every 250 hours	Every 300 hours	Every 500 hours	1 year or 1500 hours	Every 2000 hours	Every 3000 hours
Cylinder head	Retighten head nuts				○ [50 hours after trial operation of new reconditioned engine]					
	Adjust intake and exhaust valve clearances				○					
	Grind intake and exhaust valves							○		
	Check rocker arms and valve guides							○		
	Clean pre-combustion chambers							○		
Piston	Overhaul, clean, and check rings							○		
Connecting rod	Check bearings, bolts, and torque							○		
Main bearings	Check bearings and bolts									○
Crank-Shaft	Measure and check pin and journal diameters									○
	Measure and check crank arm deflection							○		
Engine exterior	Check miscellaneous bolts, nuts, and for oil leaks	○								
All engine piping	Check for leaks	○								
Clutch	Overhaul, check, and recondition moving parts									○
Others	Check battery electrolyte level	○								
	Check lamps (charging lub. oil warning & C.W. warning)	○								
	Check belt tension				○					
	Retighten major bolts and nuts				○ [The first retightening is to be made 50 Hrs after starting of the newly installed engine.]					

1-2 Routine maintenance and inspection procedures

Only the most common maintenance items will be described here. Refer to the pertinent chapters of this manual for details on various parts and workshop service.

1-2.1 Daily maintenance

(1) Oil level check

Check the engine and clutch oil levels with the dipsticks, and add oil up to the top mark. Oil level must not be allowed to fall below the bottom mark.

1) Engine side

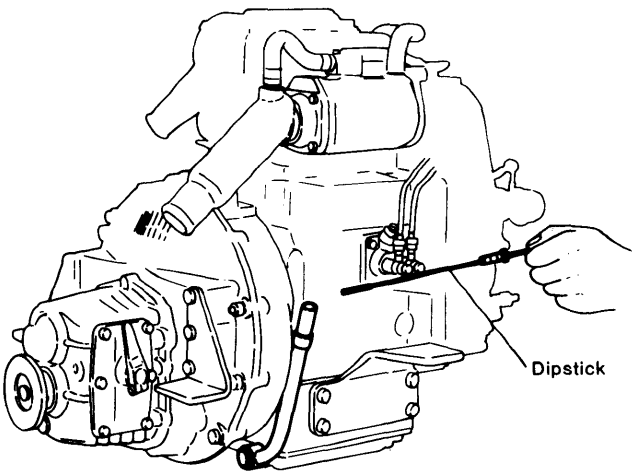

2) Clutch side

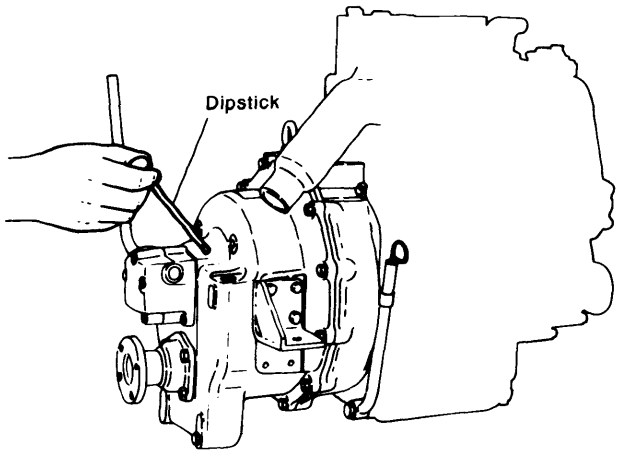

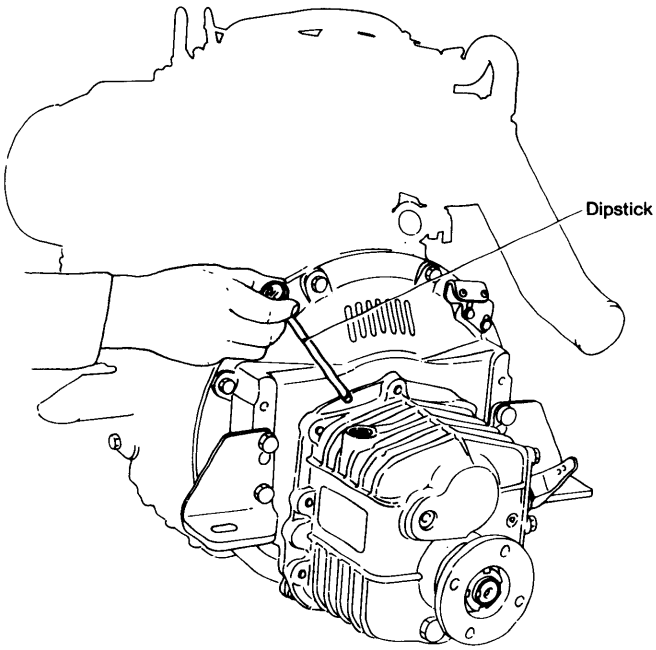

	Crankcase	Clutchcase
Dipstick	Cylinder block exhasut side	Top of clutch case (filling plug with dipstick)
Filler	Top of rocker arm cover	

(2) Draining the cooling water
The cooling water will freeze in cold weather, causing faulty operation and cracking of the cylinders, cylinder head, and exhaust manifold. Therefore, always drain the water from the engine after use if the engine must sit in freezing weather.
Drain positions
1) Cylinder block intake side drain cock

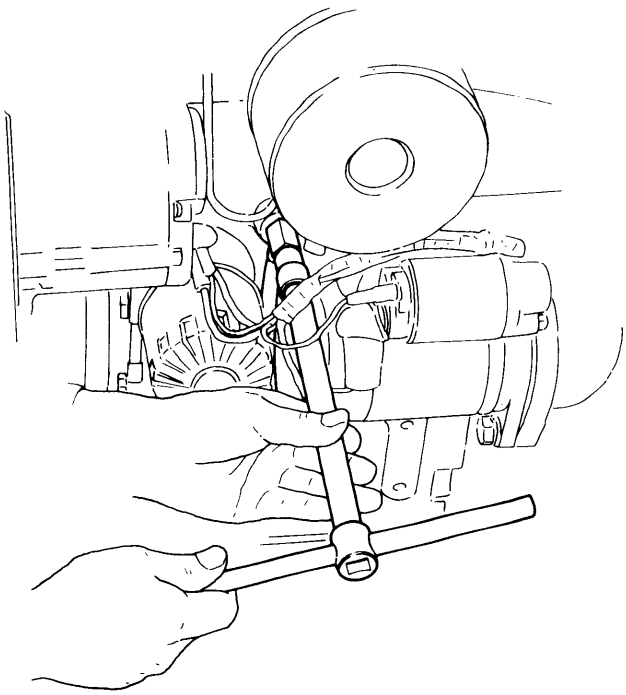

2) Exhaust manifold bottom drain cock

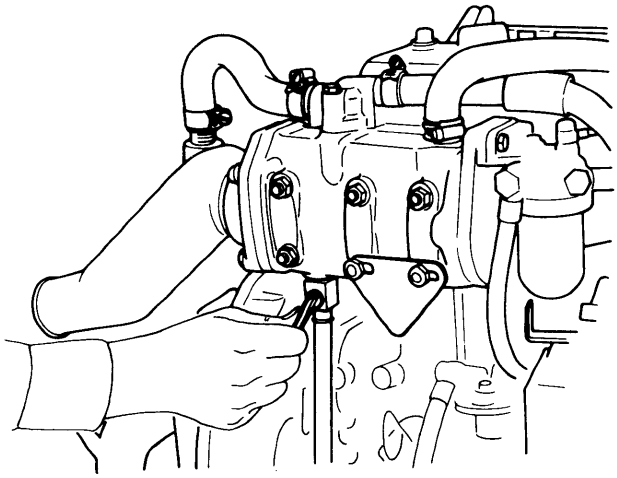

1-2.2 Maintenance every 50 engine hours

(1) Clean the fuel filter
Close the fuel tank cock and remove the bowl of the fuel filter, then clean the inside of the bowl and the filter element: After reinstalling the bowl and element, open the fuel tank cock and bleed the air from the fuel system.

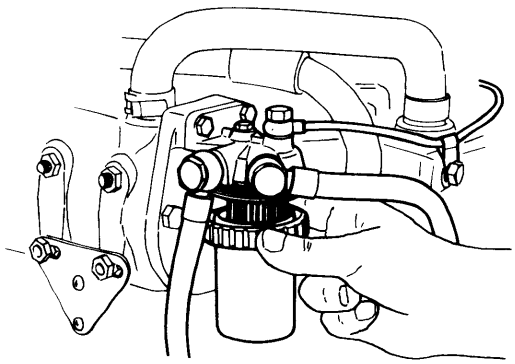

1-2.3 Maintenance every 100 engine hours

(1) Change lubricating oil in crankcase

While the engine is still warm, pump the lubricating oil from the crank case with a waste oil pump and refill crankcase with new oil up to the top mark on the dipstick.

If the drain plug can be used, drain the oil by removing the drain plug.

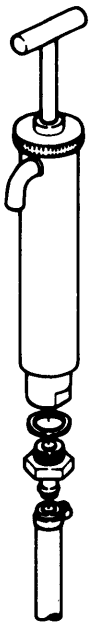

Oil evacuation pump (option) code No. 724772-39500

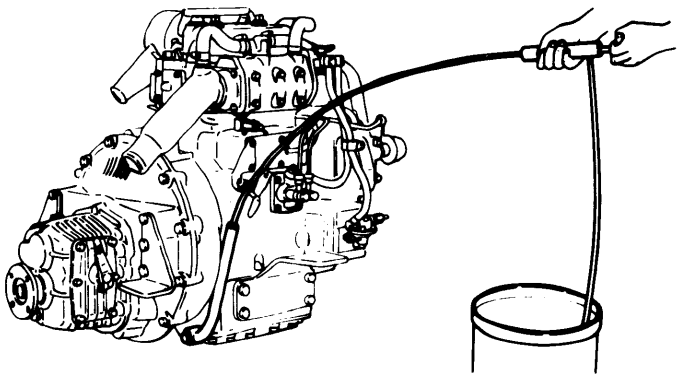

1-2.4 Maintenance every 250 engine hours

(1) Fuel filter element replacement

Close the fuel tank cock, remove the fuel filter bowl and replace the element and clean the inside of the bowl. After reinstalling the element and bowl, open the fuel tank cock and bleed the air from the fuel system.

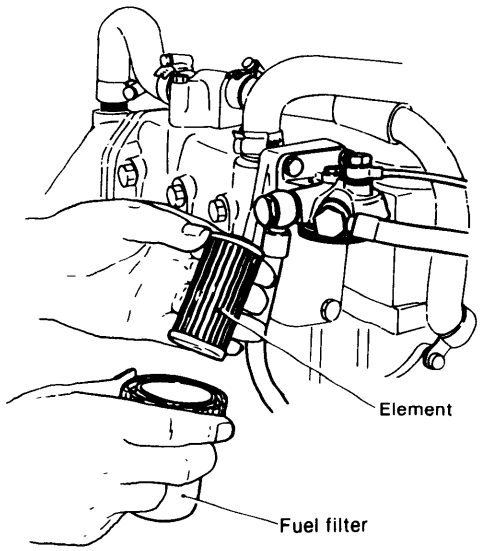

(2) Change lubricating oil in clutch case

Change oil in clutch case in the same method of crankcase.

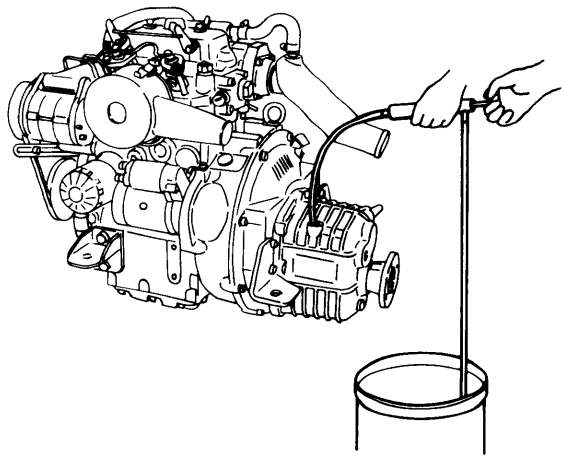

(3) Clean thermostat
1) Replace the thermostat cover.
2) Take out the thermostat and clean.

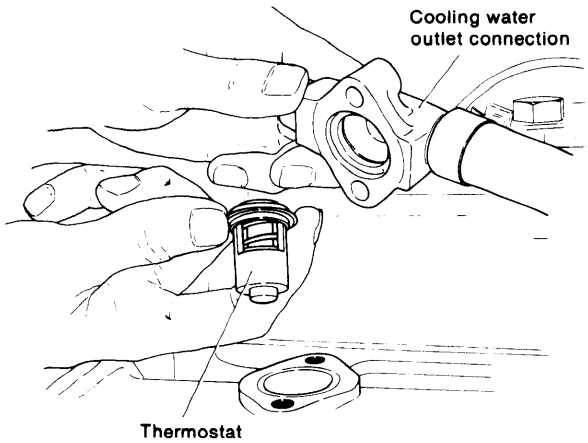

(4) Adjust governor linkage.
(5) Intake and exhaust valve adjustment
Remove the rocker arm chamber and check the intake and exhaust valve head clearance with a feeler gauge. Adjust if not within the prescribed limit. (Refer to the cylinder head chapter of this manual for a description of the adjustment method.)

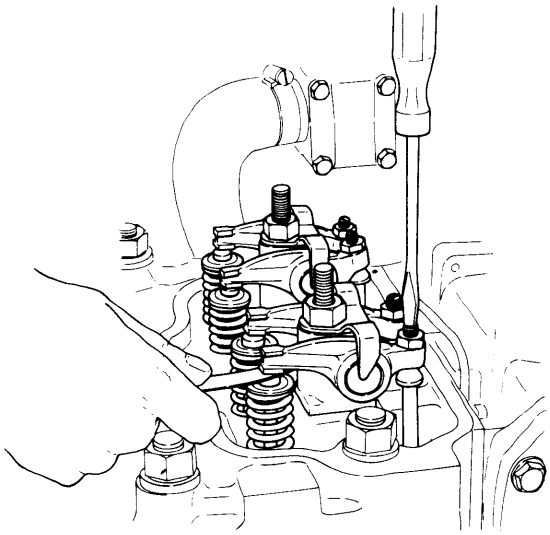

1-2.5 Maintenance every 300 engine hours

(1) Replace lub. oil filter element.

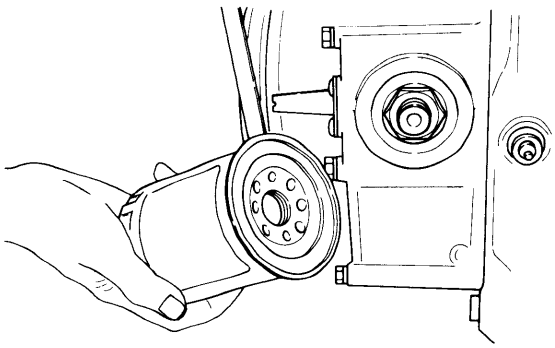

1-2.6 Maintenance every 500 engine hours

(1) Anticorrosion zinc replacement
Disassemble the both cylinder head side covers and cooling water cylinder inlet connection and replace the anticorrosion zinc.

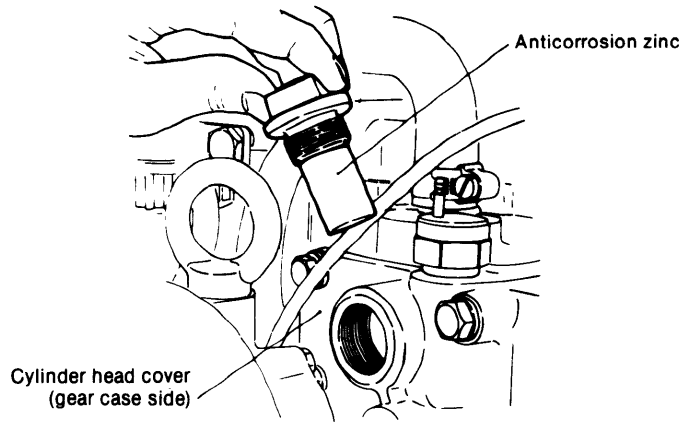

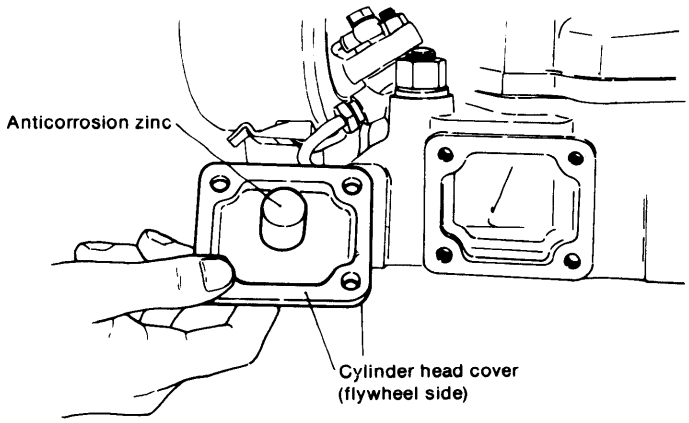

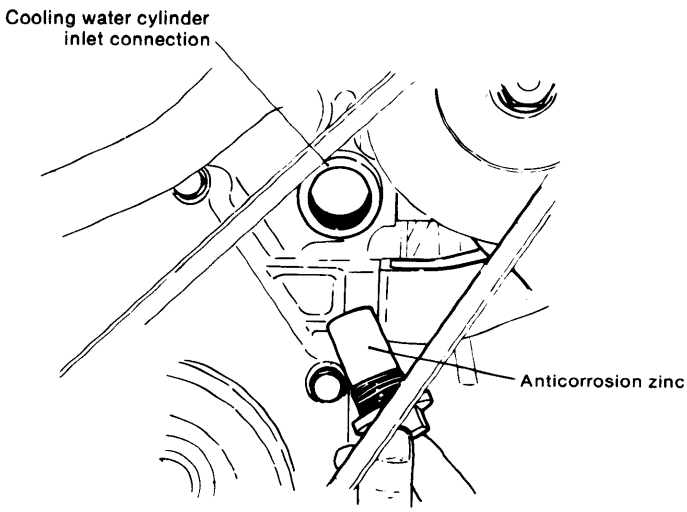

In case of engine with fresh water cooling (2QM20Y(F), 3QM30Y(F)), replace anticorrosion zinc of heat exchanger cover too.

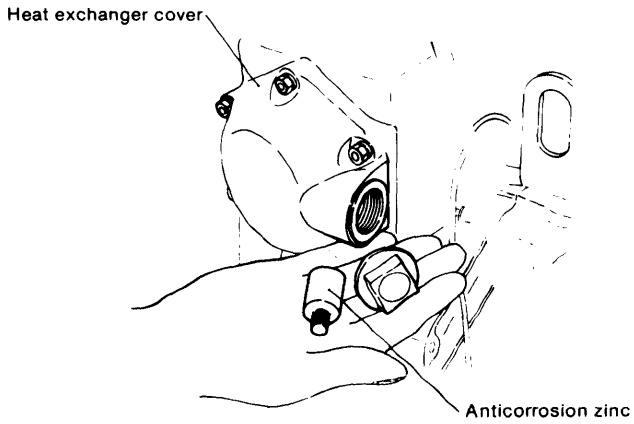

(2) Check C.W. impeller.

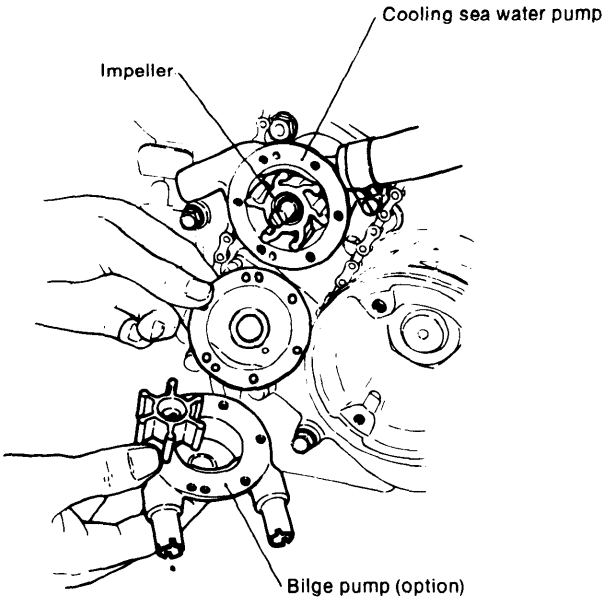

(3) Check injection timing.

YANMAR DIESEL ENGINE CO.,LTD.

1-32, CHAYAMACHI, KITA-KU, OSAKA 530 JAPAN TEL.(06)376-6211 TELEX 63436 YANMARJ FAX.(06)372-2455

Printed in Japan
0000A0A1003-9008