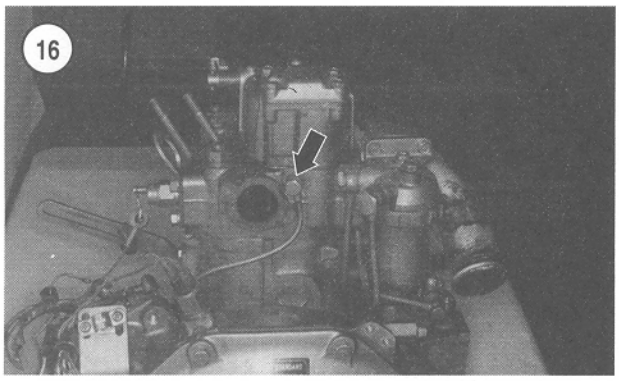

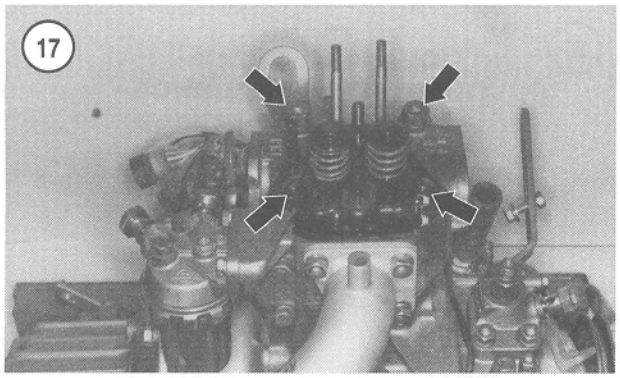

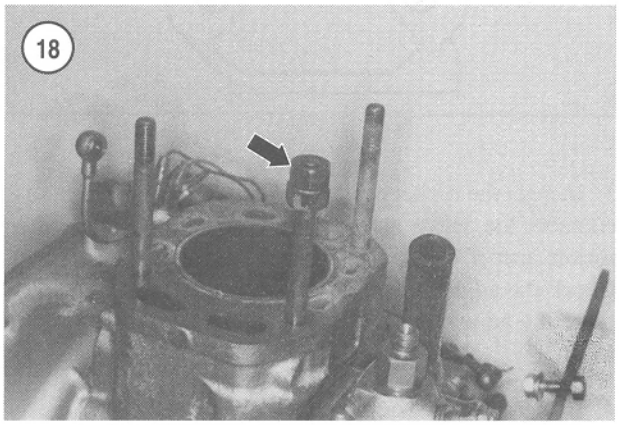

2. Check the cylinder head for signs of oil or water leakage before cleaning. Look for corrosion or foreign material in the oil and water passages.

3. Without removing the valves, remove all deposits from the combustion chamber. Use a fine wire brush dipped in solvent or make a scraper from hardwood. Be careful not to scratch or gouge the combustion chamber.

4. After all carbon is removed from the combustion chamber and ports, clean the entire head in solvent. Look for cracks or other visible signs of damage. Clean the passages with a stiff spiral brush, then blow the particles out with compressed air.

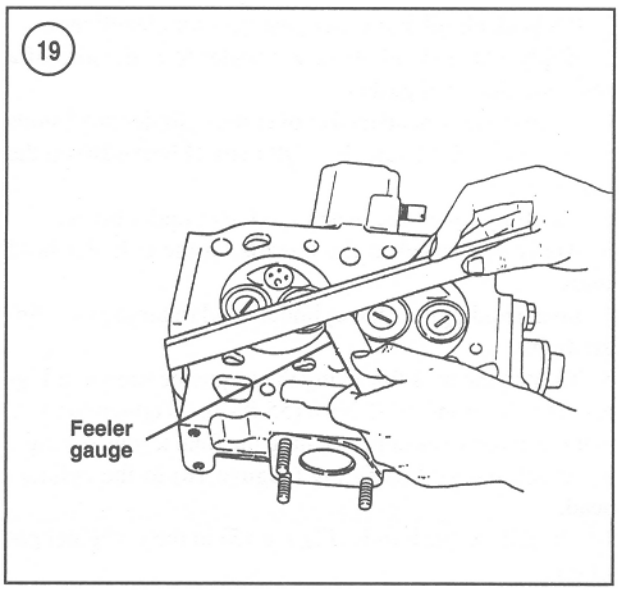

NOTE
If deposits are found in the intake or exhaust port, remove the valves and clean the ports.

5. Clean all carbon off the piston top.

6. Check the cylinder head studs for damage and replace them if necessary. If a stud is loose, tighten it using the following procedure:
   a. Install two nuts on the stud as shown in **Figure 18**.
   b. Rotate the nuts so they contact each other, then hold one nut and tighten the other nut against the first nut.
   c. Tighten the stud in the cylinder block by turning the top nut until reaching a torque of 60 N•m (44 ft.-lb.).
   d. Hold the bottom nut, loosen the top nut, and remove both nuts.

7. Check the threaded rocker arm support stud for damaged threads. Replace it if necessary.

8. Check for warpage of the cylinder head-to-block gasket surface with a straightedge and feeler gauge (**Figure 19**). Measure diagonally, as well as end to end. If the gap exceeds 0.07 mm (0.003 in.), have the head resurfaced by a machine shop.

Installation

1. Make sure the cylinder head and block gasket surfaces are clean.

2. Recheck all oil and water passages for cleanliness.
3. Apply Three Bond 50 gasket sealer to both sides of a new cylinder head gasket.
4. Place the new head gasket over the cylinder head studs on the block. Make sure the TOP mark (**Figure 20**) on the gasket is up.
5. Carefully lower the head onto the cylinder block.
6. Apply engine oil to the threads on the cylinder head studs.
7. Install and tighten the cylinder head retaining nuts finger-tight.
8. Tighten the nuts following the sequence shown in **Figure 21** to a torque of 75 N•m (55 ft.-lb.). Tighten the nuts in three equal steps until reaching the final torque setting.
9. Attach the oil line fitting (**Figure 16**) to the cylinder head.
10. Install the push rods (**Figure 15**) in their original positions.
11. Install the rocker assembly (B, **Figure 14**) and the rocker arm stand retaining nut (A). Tighten the nut to 37 N•m (27 ft.-lb.).
12. Install the fuel injector and precombustion chamber as described in Chapter Seven.
13. Install the air cleaner base (**Figure 13**) and the air cleaner.
14. Connect the wire lead to the water temperature sender (**Figure 12**).
15. Connect the lower water hose (B, **Figure 11**) to the thermostat housing.
16. Install the exhaust elbow.
17. Install the alternator.
18. If the engine is installed in the boat, proceed as follows:
    a. Attach the water hose (A, **Figure 11**) to the exhaust elbow and thermostat housing, then tighten the hose clamps.
    b. Attach the exhaust hose to the exhaust elbow.
    c. Connect the negative battery cable to the negative battery terminal.
19. Adjust the valve clearance as described in Chapter Three.
20. Reinstall the valve cover.

ROCKER SHAFT ASSEMBLY

Each valve is actuated by a rocker arm that rides on a shaft (**Figure 22**). Each rocker arm is equipped with a bushing in the rocker arm bore. Ribs in the valve cover retain the rocker arms on the rocker shafts.

1. Remove the valve cover as previously described.
2. Remove the rocker arm stand retaining nut (A, **Figure 14**), then remove the rocker assembly (B).

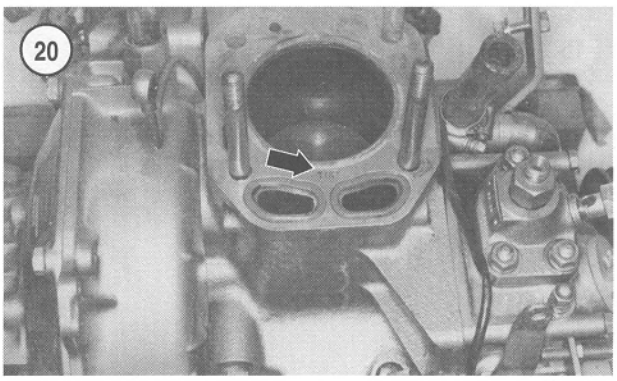

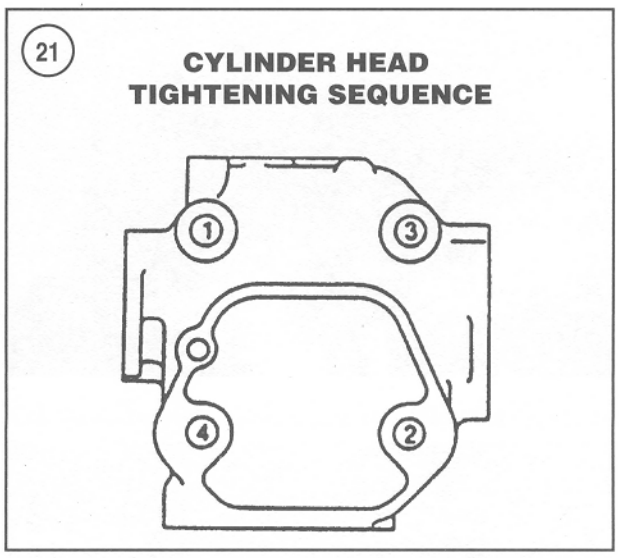

3. Inspect the rocker arm. The pad on the rocker arm that contacts the valve stem must be smooth. Replace the rocker arm if the pad is damaged or excessively worn. Check the adjusting screw push rod seat for galling. Replace the adjusting screw if it is damaged or excessively worn.

4. Inspect and measure the inside diameter of the rocker arm bushing and the outside diameter of the rocker arm shaft. Replace the rocker arm or rocker arm shaft stand if the measurements exceed the specifications in **Table 1**.

NOTE
The rocker arm and bushing are available only as a unit assembly.

5. Reassemble and reinstall the rocker arm assembly by reversing the removal procedure. Adjust valve clearance as described in Chapter Three.

22

VALVE COMPONENTS

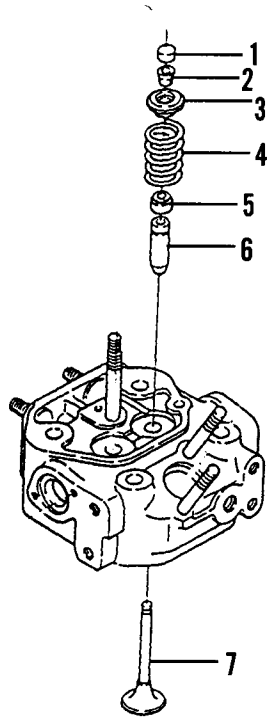

1. Wear cap
2. Keys
3. Valve spring retainer
4. Valve spring
5. Valve seal
6. Valve guide
7. Valve

23

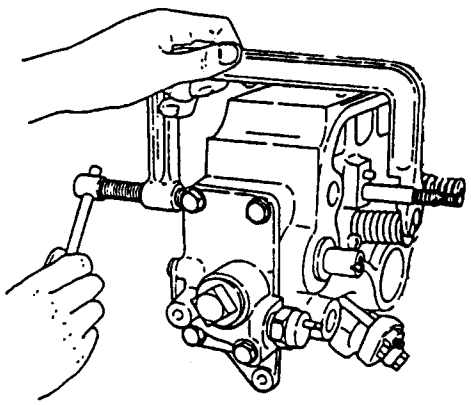

VALVES AND VALVE SEATS

Servicing the valves, guides and valve seats must be done by a dealer or machine shop, as special knowledge and expensive machine tools are required.

A general practice among those who do their own service is to remove the cylinder head, perform all disassembly except valve removal and take the head to a dealer or machine shop for inspection and service. Since the cost is low relative to the required effort and equipment, this is usually the best approach, even for experienced mechanics. The following procedures are provided to acquaint the home mechanic with the procedure.

Valve Removal

Refer to **Figure 22**.

1. Remove the cylinder head as described in this chapter.
2. Remove the rocker shaft assembly as described in this chapter.
3. Remove the wear cap (1, **Figure 22**) on the valve stem.
4. Compress the valve spring with a compressor like the one shown in **Figure 23**.

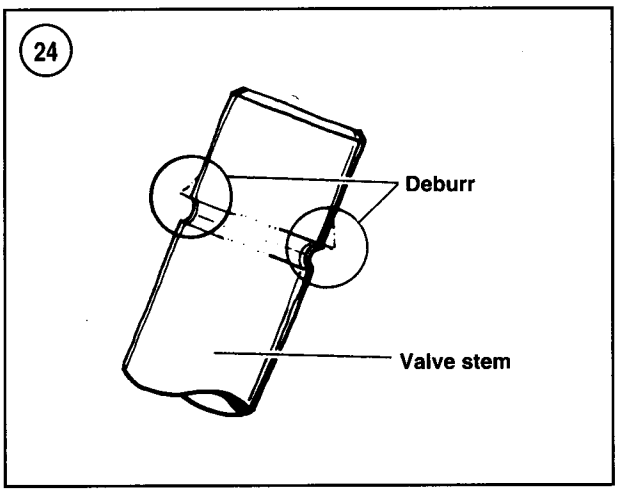

5. Remove the valve keys (2, **Figure 22**) and release the spring tension.
6. Remove the valve spring retainer and valve spring.

CAUTION
*Remove any burrs from the valve stem lock grooves (**Figure 24**) before removing the valve to prevent damage to the valve guide.*

7. Remove the valve.
8. Remove and discard the valve stem seal (5, **Figure 22**).
9. Repeat Steps 3-8 for the remaining valve.

Inspection

1. Clean the valves with a fine wire brush or buffing wheel. Discard any cracked, warped or burned valves.
2. Measure the valve stems at the top, center and bottom for wear. A machine shop can do this when the valves are ground.

NOTE
*Check the thickness of the valve edge or margin after the valves have been ground. See **Figure 25**. Any valve with a margin less than 0.75 mm (0.030 in.) should be discarded.*

3. Remove all carbon and varnish from the valve guides with a stiff spiral wire brush.

NOTE
The next step assumes that all valve stems have been measured and are within specifications. Replace valves with worn stems before performing this step.

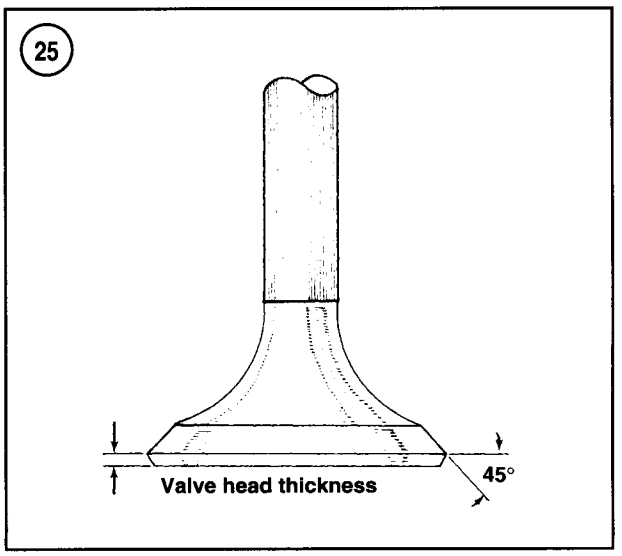

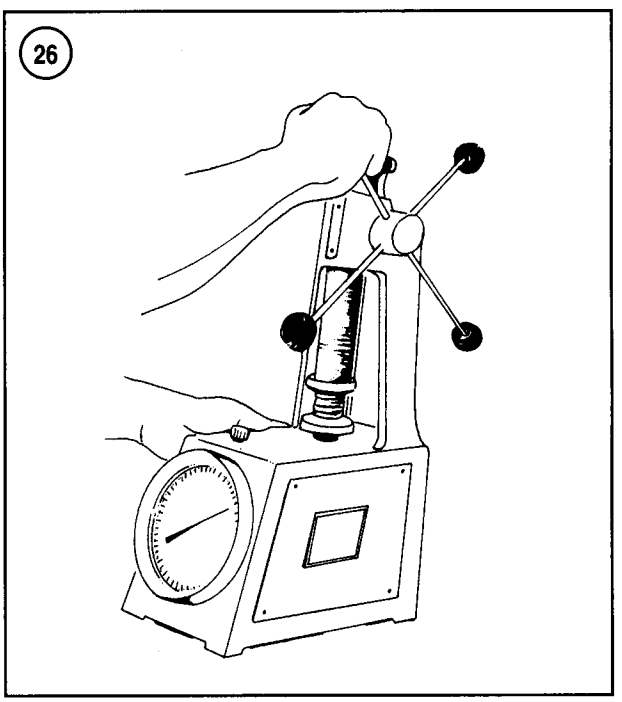

4. Insert each valve into the guide from which it was removed. Holding the valve just slightly off its seat, rock it back and forth in a direction parallel with the rocker arms. This is the direction in which the greatest wear normally occurs. If the valve stem rocks more than slightly, the valve guide is probably worn.
5. If there is any doubt about valve guide condition after performing Step 4, measure the valve guide. Compare the results with specifications in **Table 1**. Worn guides must be replaced.

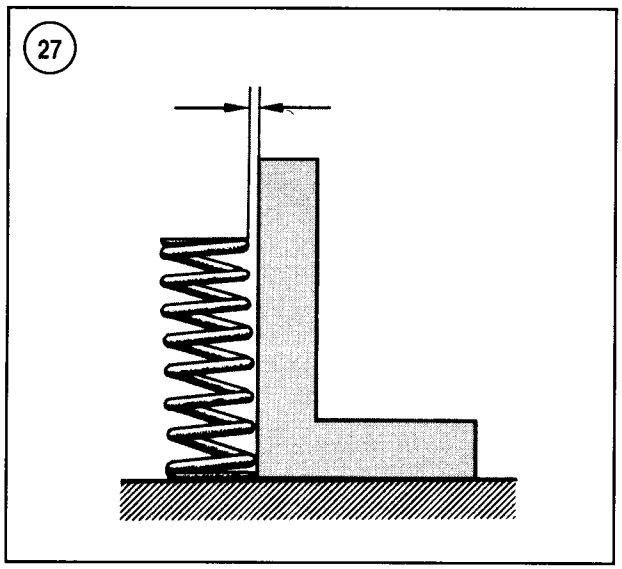

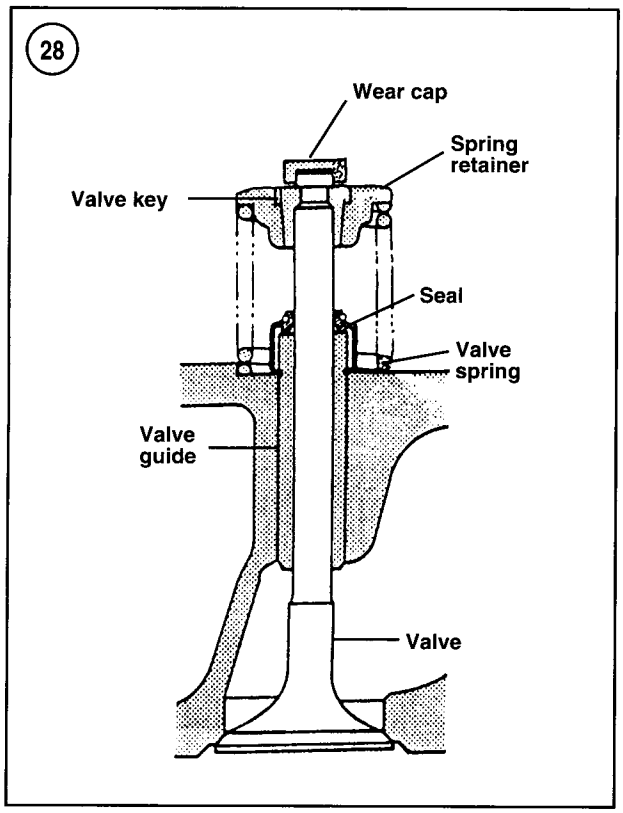

6. Test the valve springs under load on a spring tester (**Figure 26**). Replace any spring that does not meet the specification in **Table 1**.

7. Inspect the valve seats. If worn or burned, they must be reconditioned. This is a job for a dealer or machine shop, although the procedure is described in this chapter.

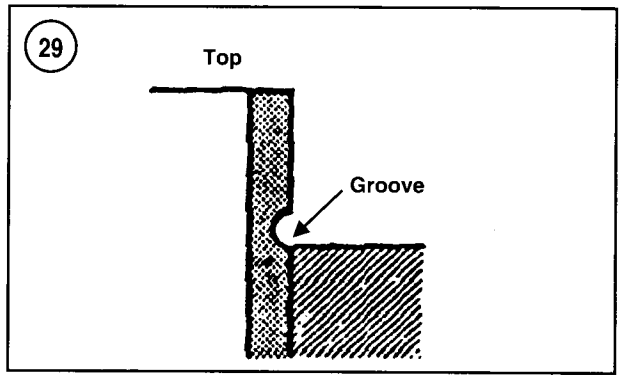

8. Check each spring on a flat surface with a steel square. See **Figure 27**. Slowly revolve the spring 360° and note the space between the top of the coil and the square. If it exceeds 1.4 mm (0.055 in.) at any point, replace the spring.
9. Check the valve guides (**Figure 28**) for wear and looseness. Refer to **Table 1** for valve guide specifications. A loose valve guide must be replaced.

Valve Guide Replacement

The cylinder head is equipped with replaceable valve guides (6, **Figure 22**). The intake and exhaust valve guides are identical. Take the cylinder head to a dealership or machine shop if valve guide replacement is required.

When installing the valve guides, the grooved end must be toward the top of the cylinder head. The groove must be flush with the head surface as shown in **Figure 29**.

PUSH RODS

1. Remove the rocker arms as previously described.
2. Remove the push rods and mark them so they can be reinstalled in their original positions.
3. Inspect push rod ends for damage. Maximum allowable runout is 0.03 mm (0.0012 in.).
4. Reinstall the push rods by reversing removal procedure. Adjust valve clearance as described in Chapter Three.

PISTON/CONNECTING ROD ASSEMBLY

Piston/Connecting Rod Removal

1. Remove the engine as described in this chapter.
2. Place a suitable container under the oil pan and remove the drain plug. Let the crankcase oil drain, then reinstall the drain plug.

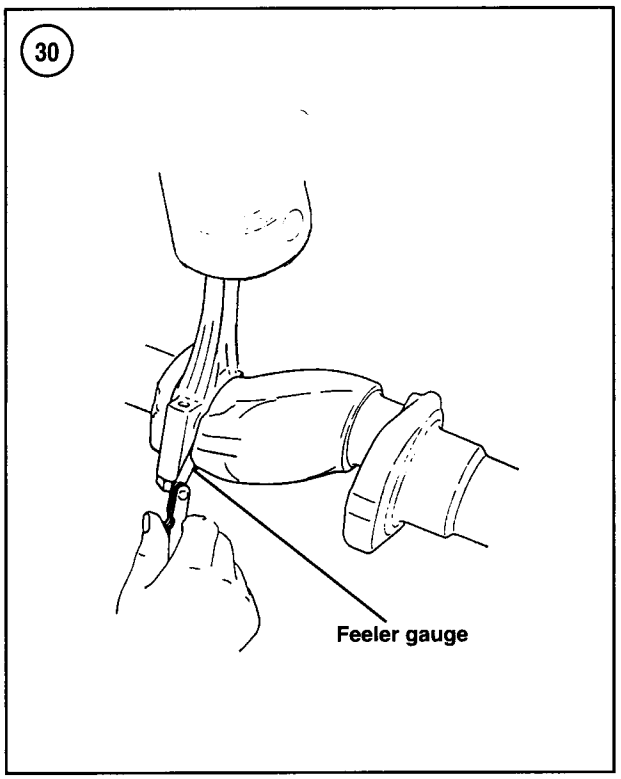

3. Remove the cylinder head as described in this chapter.

NOTE
Note the location of the long screw when removing the oil pan retaining screws.

4. Remove the oil pan.

5. Rotate the crankshaft until the piston is at bottom dead center. Pack the cylinder bore with clean shop rags. Remove the carbon ridge at the top of the cylinder bore with a ridge reamer. These can be rented for use. Vacuum out the shavings, then remove the shop rags.

6. Rotate the crankshaft until the connecting rod is centered in the bore. Measure the connecting rod side clearance with a flat feeler gauge (**Figure 30**). If the clearance exceeds specifications (**Table 1**), replace the connecting rod during reassembly.

7. Remove the connecting rod bolts. Lift off the cap, along with the lower bearing insert.

8. Use a wooden hammer handle to push the piston and connecting rod from the bore.

9. Remove the piston rings with a ring remover (**Figure 31**).

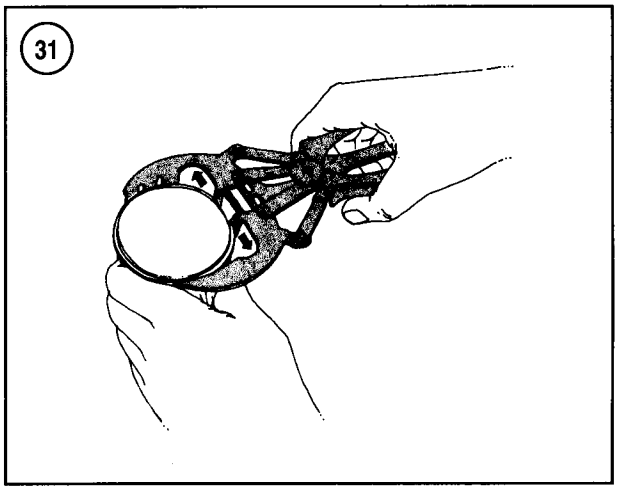

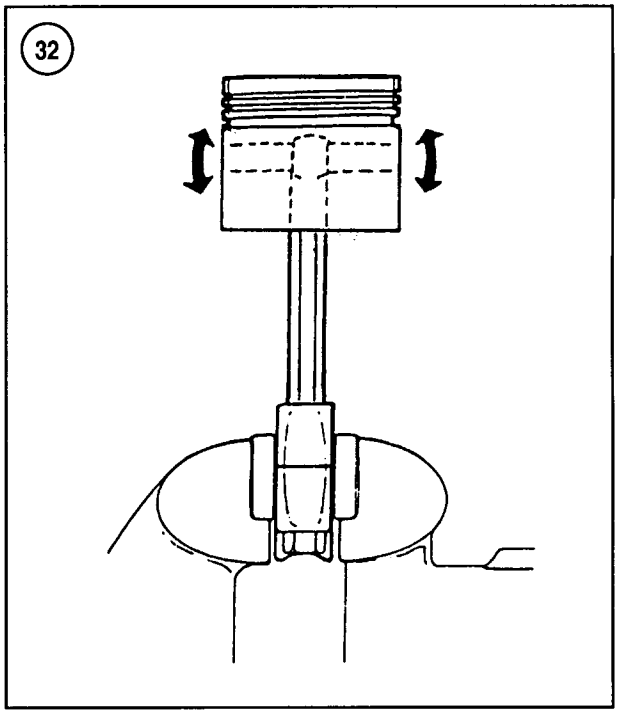

Piston Pin Removal/Installation

The steel piston pin rides directly in the piston and the connecting rod bushing. Circlips at each end retain the piston pin in the piston.

1. Before removing the piston, place the crankshaft end of the connecting rod in a vise with soft jaws. Rock the piston as shown in **Figure 32**. Any rocking motion (do not confuse with the normal sliding motion) indicates wear on the piston pin, piston pin bore or connecting rod small end bore (or a combination of these).

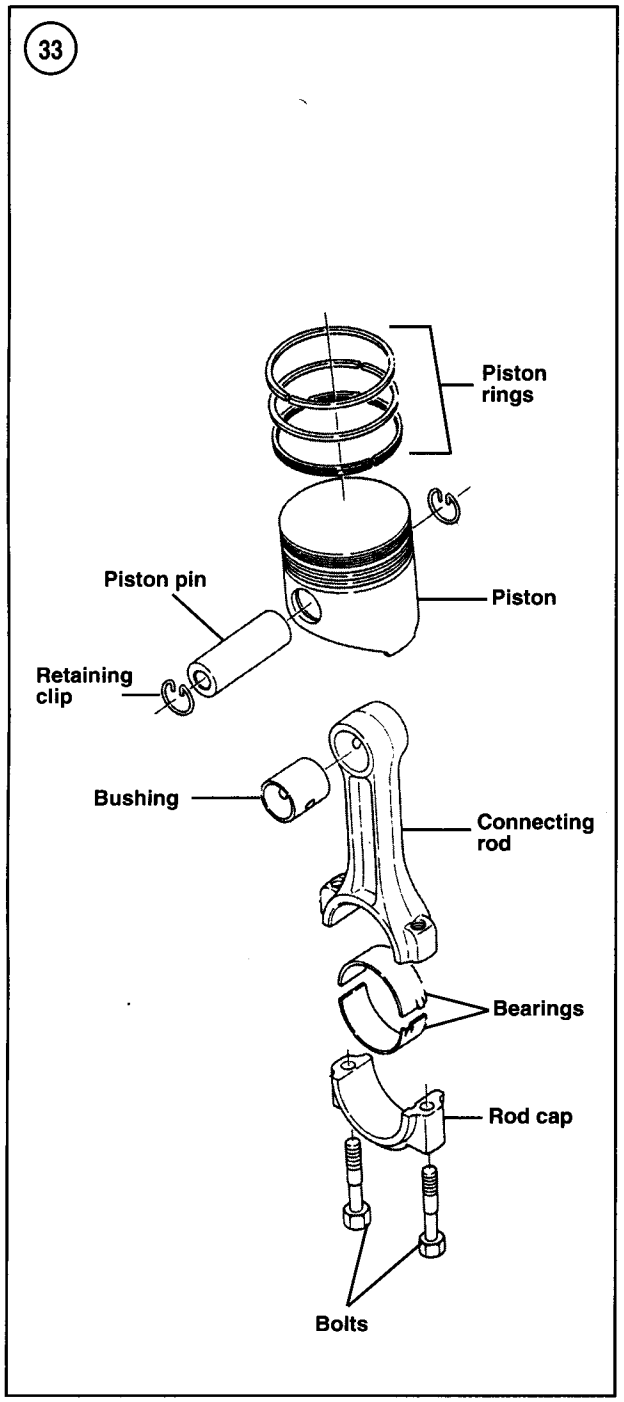

2. Remove the clip from each side of the piston pin bore (**Figure 33**) with a small screwdriver or scribe. Hold a thumb over one edge of the clip when removing it to prevent the clip from springing out.

3. Use a wooden dowel or suitable tool and push out the piston pin. If the pin is difficult to remove, heat the piston with a hair dryer. Separate the piston from the connecting rod.

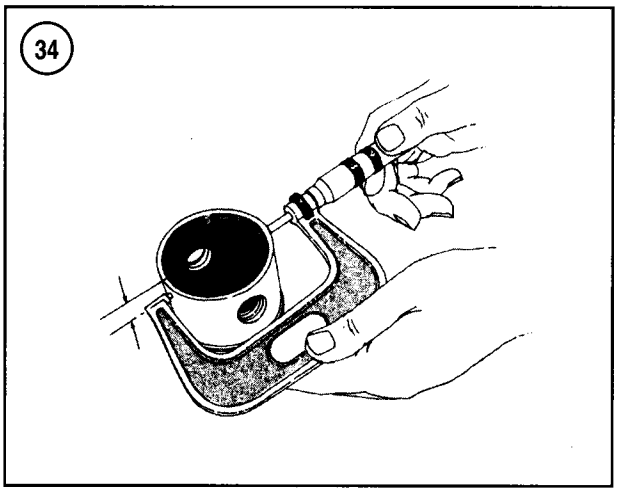

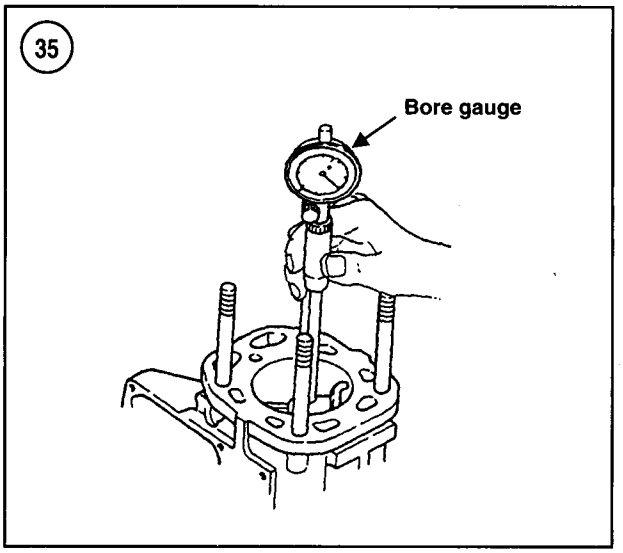

Piston/Cylinder Bore Check

Unless precision measuring equipment is available, have this procedure done by a machine shop.

1. Measure the piston diameter with a micrometer (**Figure 34**) at a right angle to the piston pin bore 9 mm (0.35 in.) from the bottom of the piston skirt.

2. Measure the cylinder bore diameter at several points with a bore gauge (**Figure 35**). **Figure 36** shows the points of normal cylinder wear. If dimension A exceeds dimension B by more than 0.02 mm (0.0008 in.), rebore the cylinder and install a new piston/ring assembly.

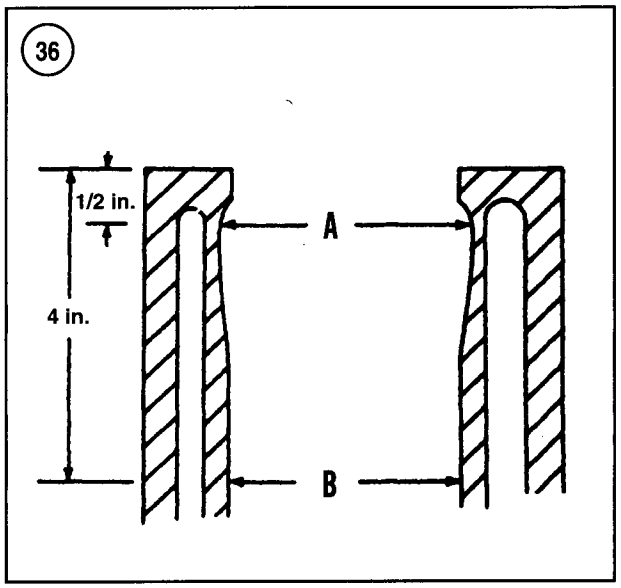

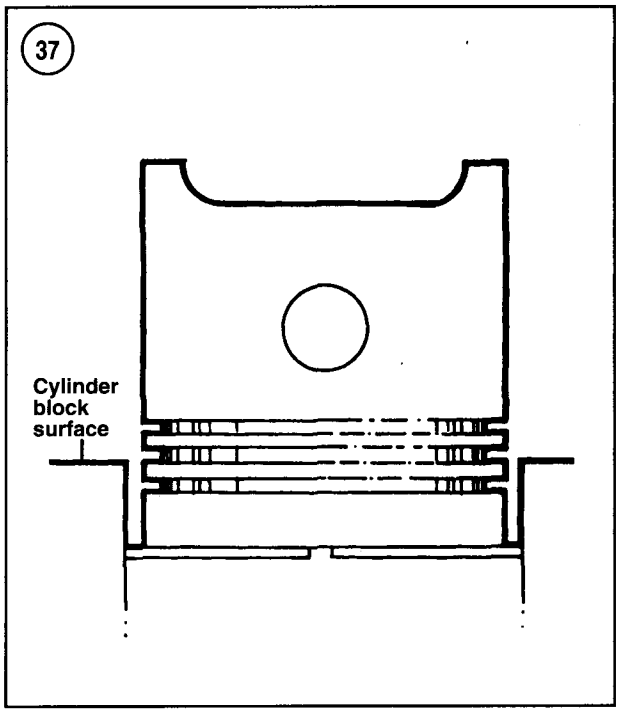

3. If the cylinder bore is damaged or excessively worn, rebore the cylinder bore and install a new piston. If the piston is worn, but the cylinder bore is acceptable, install a new piston.

NOTE
Provide the machine shop with the new piston so the cylinder can be bored to the correct dimension.

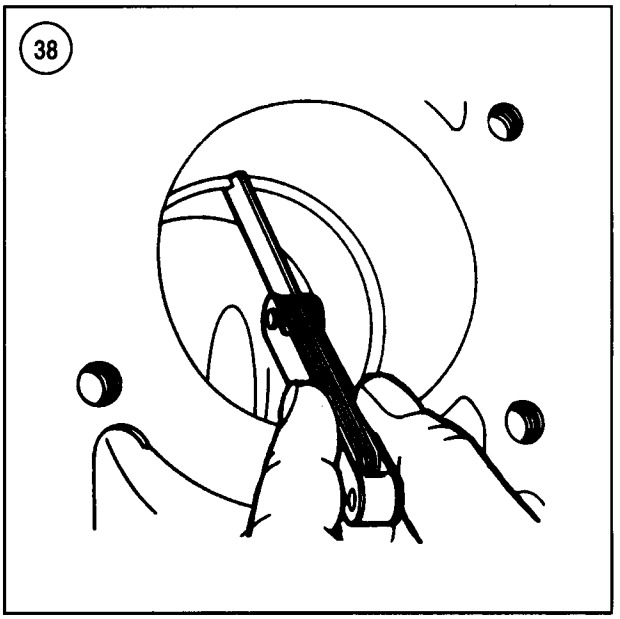

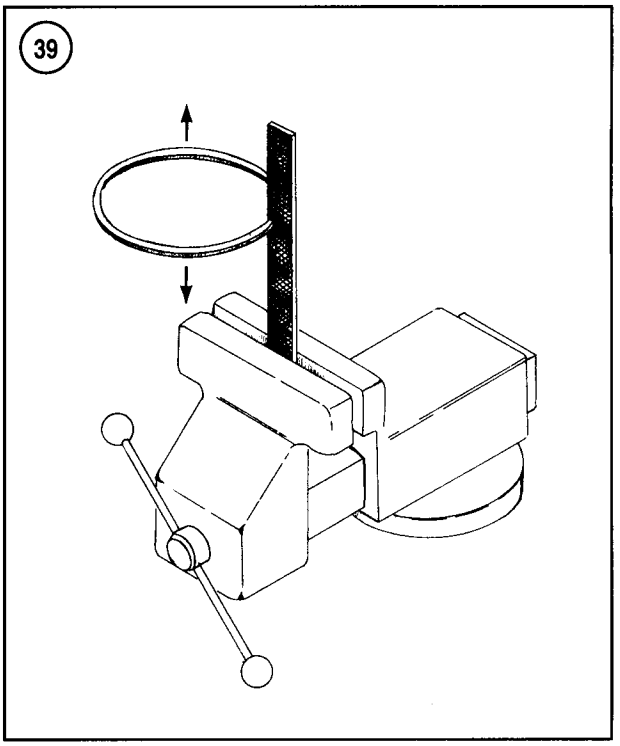

Piston Ring Fit/Installation

1. Check the ring gap of each piston ring. To do this, position the ring at the bottom of the ring travel area and square it by tapping gently with an inverted piston. See **Figure 37**.

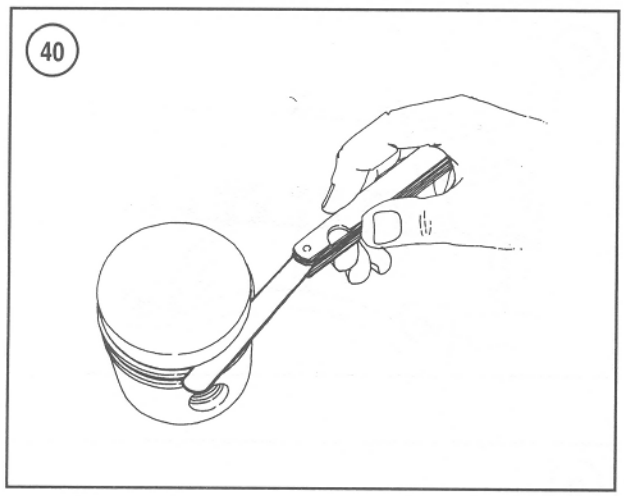

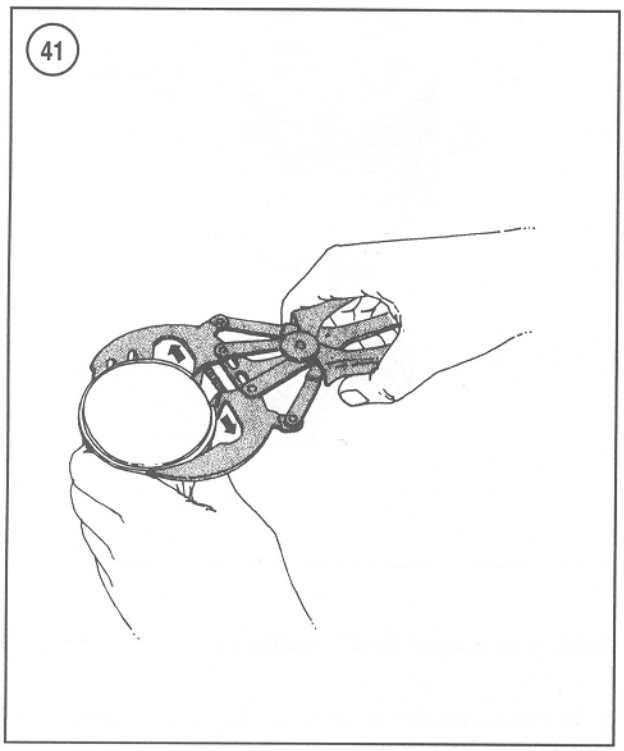

NOTE
If the cylinder has not been rebored, check the gap at the bottom of the ring travel, where the cylinder is the least worn.

2. Measure the ring gap with a feeler gauge as shown in **Figure 38**. Compare the measurement with specifications in **Table 1**. If the measurement is not within specification, the rings must be replaced as a set. Check the gap of new rings as well. If the gap is too small, file the ends of the ring to correct it (**Figure 39**).

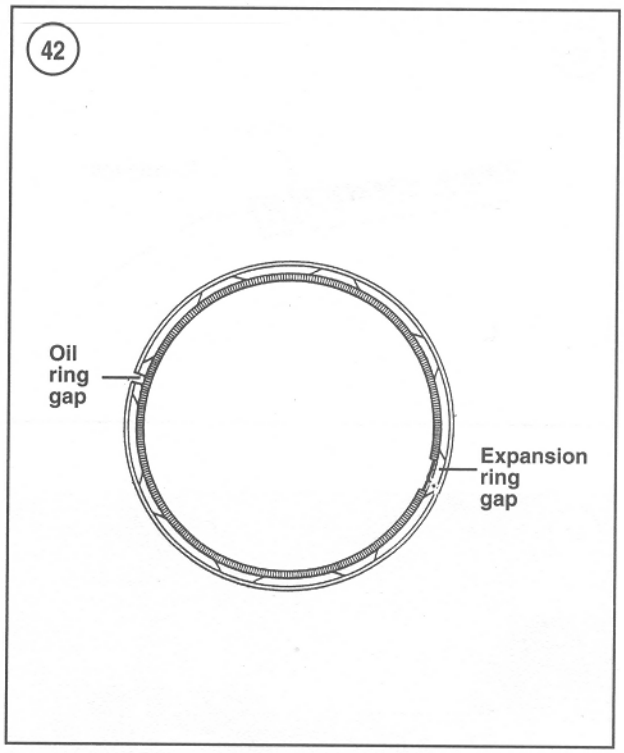

3. Check the side clearance of the rings as shown in **Figure 40**. Place the feeler gauge alongside the ring all the way into the groove. If the measurement is not within specifications (**Table 1**), either the rings or the ring grooves are worn. Inspect and replace them as required.

4. Use a ring expander tool (**Figure 41**) to carefully install the oil control ring, then the compression rings. The oil ring consists of two pieces, the outer ring and the inner expansion spring. Assemble the oil ring on the piston so the expansion spring gap is on the opposite side of the piston from the ring end gap. See **Figure 42**. The second compression ring is tapered while the top compression ring has a barrel face. The top of each compression ring is marked and must face toward the piston crown.

Connecting Rod Inspection

Have the connecting rod checked for straightness by a dealer or machine shop.

The piston pin end of the connecting rod is equipped with a bushing. Refer to **Table 1** for bushing specifications. If bushing replacement is required, a press is necessary to remove the old bushing and install a new bushing. The oil holes in the bushing and connecting rod must align. Ream the bushing to obtain the desired clearance in **Table 1**.

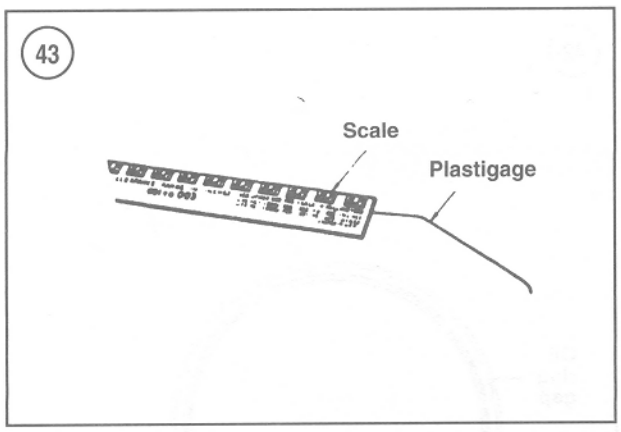

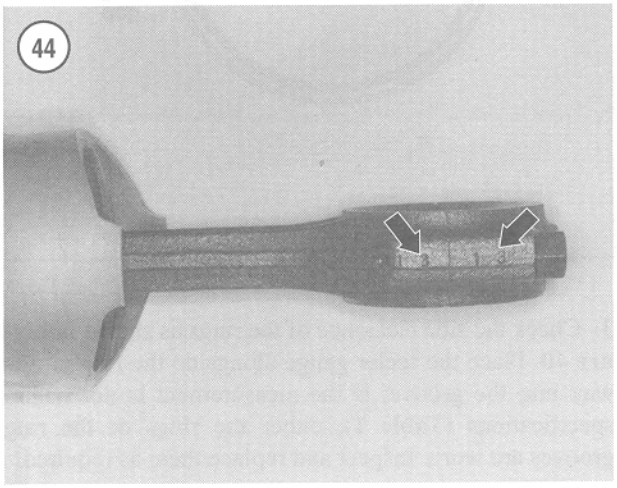

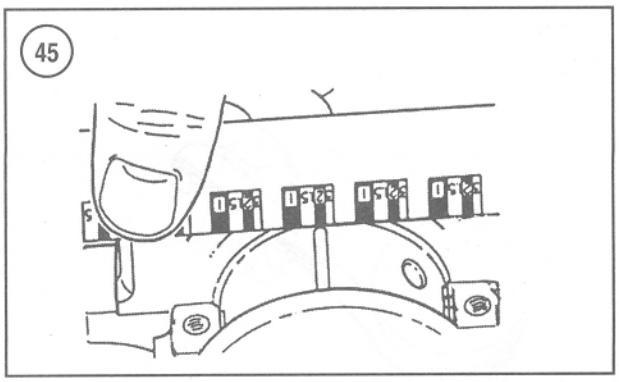

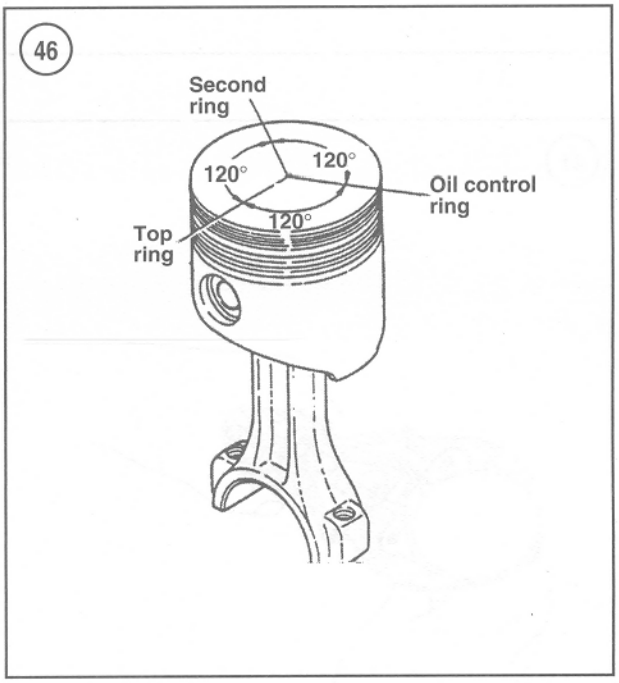

Connecting Rod Bearing Clearance Measurement

1. Place the connecting rod and upper bearing half on the connecting rod journal.
2. Cut a piece of Plastigage the width of the bearing (**Figure 43**). Place the Plastigage on the journal, then install the rod cap and bearing. Be sure to install the cap so the marks on the cap and rod are on the same side (**Figure 44**).

NOTE
Do not place Plastigage over the journal oil hole.

3. Tighten the connecting rod cap to the specification in **Table 2**. Do not rotate the crankshaft while the Plastigage is in place.
4. Remove the connecting rod cap. To determine bearing clearance, compare the width of the flattened Plastigage to the markings on the envelope (**Figure 45**). If the clearance is excessive, have the crankshaft reground and install undersize bearings.

Piston/Connecting Rod Installation

1. Rotate the crankshaft so the crankpin is at bottom dead center.
2. Make sure the ring gaps are positioned as shown in **Figure 46**.
3. Immerse the entire piston in clean engine oil. Coat the cylinder wall with oil.
4. Install a piston ring compressor around the piston rings.

CAUTION
Use extreme care in Step 5 to prevent the connecting rod from nicking the crankshaft journal.

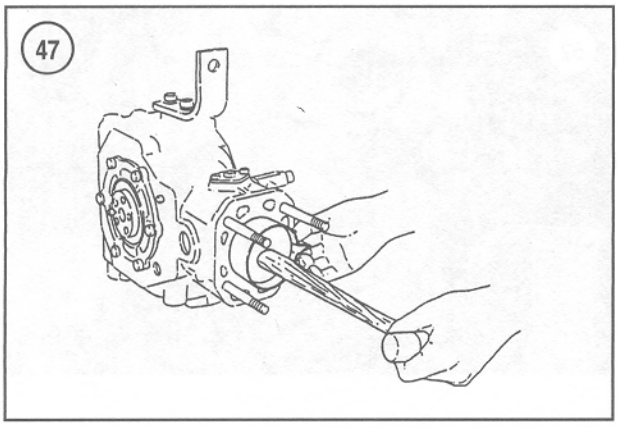

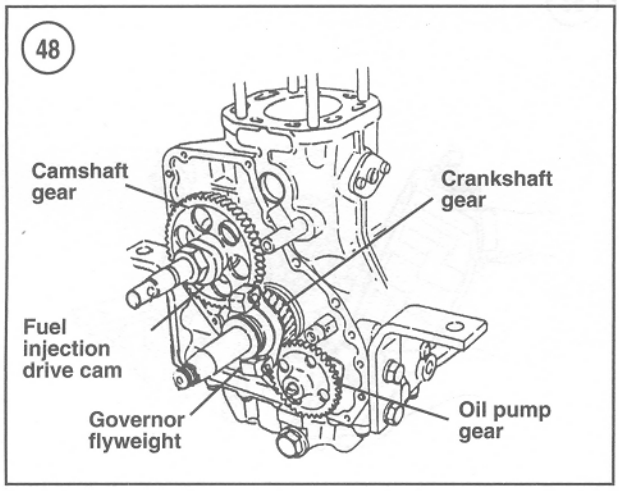

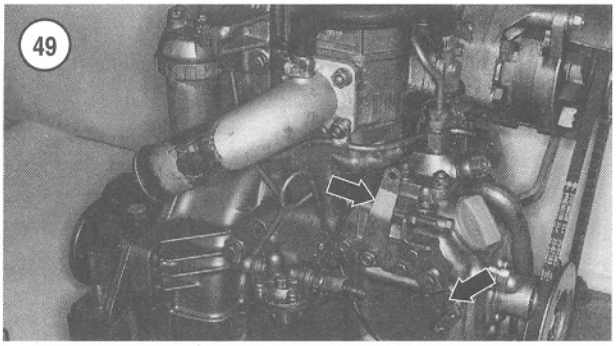

5. Position the piston so the numbered side of the rod (**Figure 44**) faces toward the camshaft side of the engine. Insert the piston/connecting rod assembly into the cylinder (**Figure 47**). Lightly tap on the piston crown with a wooden hammer handle to insert the piston. Make sure the rod does not bang against the crankshaft.

6. Clean the connecting rod bearings carefully, including the back sides. Coat the crankpin journal and bearings with clean engine oil. Place the bearings in the connecting rod and cap.

7. Pull the connecting rod and bearing into position against the crankpin. Lightly lubricate the connecting rod bolt threads with engine oil.

8. Install the connecting rod cap. Make sure the rod and cap are properly aligned. Install the bolts finger-tight.

9. Tighten the cap retaining bolts to the specifications in **Table 2**.

10. Check the connecting rod side play as described under *Piston/Connecting Rod Removal* in this chapter.

11. Reassemble the engine by reversing the disassembly procedures.

TIMING GEARCASE

The timing gearcase covers the camshaft and crankshaft gears and the oil pump (**Figure 48**). The timing gearcase also contains the governor mechanism and serves as the mounting location for the fuel injection pump. A ball bearing in the timing gearcase supports the outer end of the crankshaft.

To remove and reinstall the timing gearcase, proceed as follows:

1. Disconnect the negative battery cable.
2. Remove the alternator as described in Chapter Eight.
3. Remove the oil filter.
4. Detach the control cables from the speed control lever and the stop lever (**Figure 49**).
5. Remove the fuel injection pump as described in Chapter Seven.

NOTE

If a suitable tool is not available to hold the crankshaft pulley when unscrewing the retaining nut, remove the starter and prevent flywheel rotation by inserting a screwdriver into the ring gear teeth.

6. Remove the crankshaft pulley retaining nut. Use a suitable puller to remove the crankshaft pulley (**Figure 50**). Remove the drive key from the crankshaft.
7. Remove the water pump as described in Chapter Eight.
8. Remove the manual starter cover (**Figure 51**).
9. Remove the setscrew in the end of the camshaft (A, **Figure 52**), then remove the manual starter drive pin (B).
10. Remove the timing gearcase (**Figure 53**).
11. Remove the gasket and any residue from the gearcase and crankcase surfaces.
12. If crankshaft or starter seal replacement is necessary, proceed as follows:

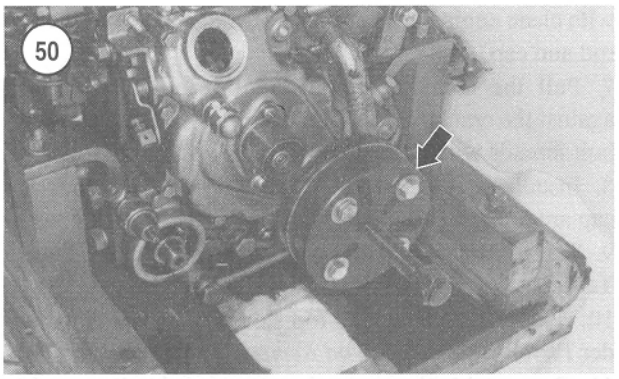

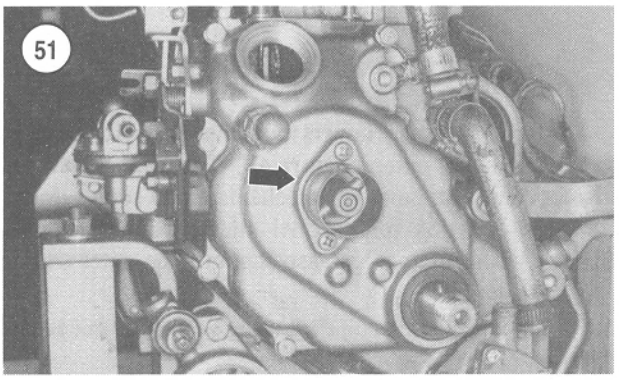

a. Pry the old seal from the gearcase with a large screwdriver. Work carefully to prevent damage to the gearcase seal surface.
b. Clean the seal recess in the cover with solvent and blow it dry with compressed air.
c. Apply gasket sealer to the periphery of the seal.
d. Position a new seal in the cover recess with its open end facing the inside of the gearcase. Drive the seal into place with a suitably sized seal driver or socket.

13. If crankshaft bearing replacement is necessary, proceed as follows:
a. Refer to Chapter Seven to remove the governor shaft from timing gearcase.
b. Pry the seal from the gearcase with a large screwdriver. Work carefully to prevent damage to the gearcase seal surface.
c. Drive or press out the bearing (**Figure 54**). Force the bearing toward the inside of the gearcase.
d. Clean the seal and bearing recesses in the cover with solvent and blow them dry with compressed air.
e. Drive or press in a new bearing until the bearing seats in the recess in the gearcase.
f. Apply gasket sealer to the periphery of the seal.

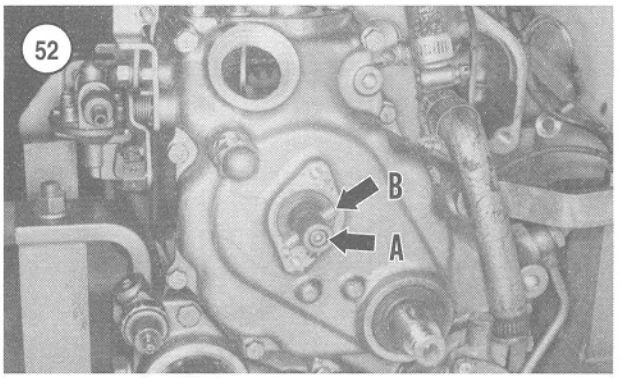

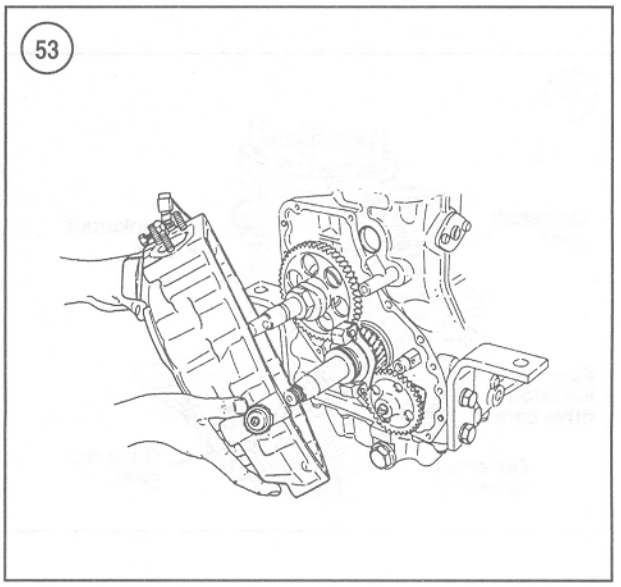

g. Position a new seal in the cover recess with its open end facing the inside of the gearcase. Drive the seal into place with a suitably sized seal driver or socket.
h. Refer to Chapter Seven to reinstall the governor shaft.

14. Reverse the removal procedure to reinstall the timing gearcase. Tighten the gearcase retaining screws to the specification in **Table 2**.

LUBRICATION SYSTEM

Refer to Chapter Two for lubrication system operation, diagrams and oil pressure test.

Oil Pump

The engine oil pump is mounted on the front (timing gear) side of the cylinder block (**Figure 48**).

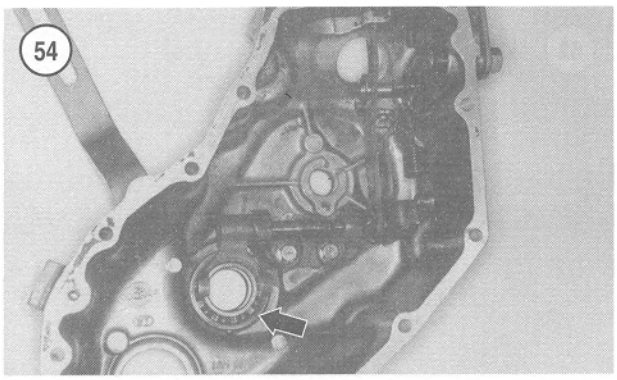

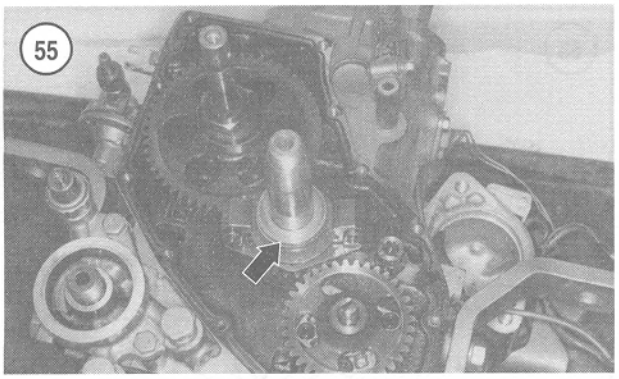

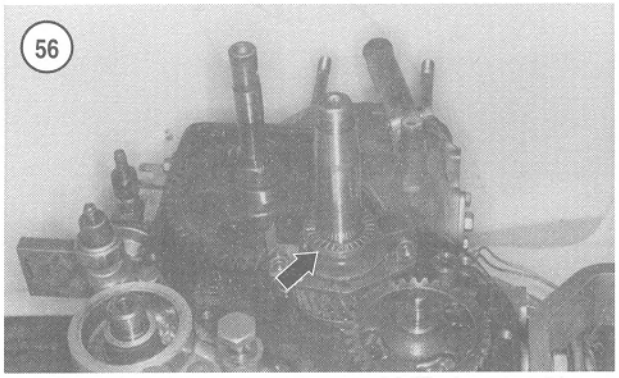

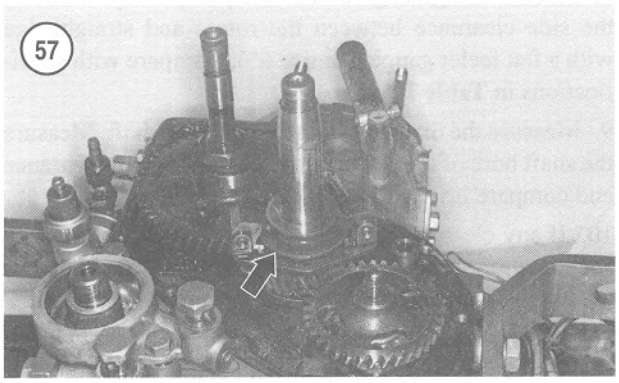

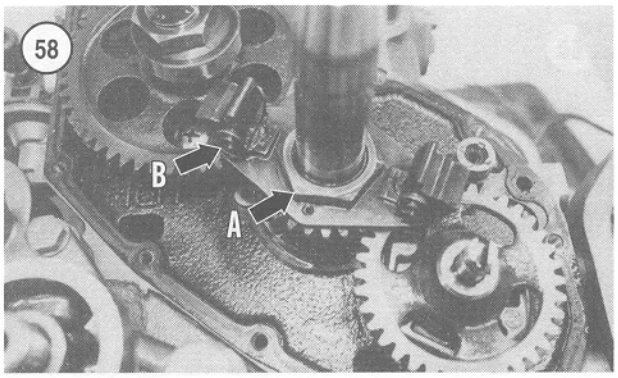

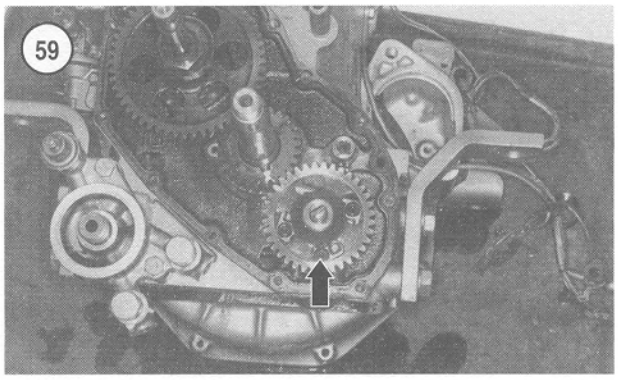

Removal and installation

1. Remove the timing gearcase as previously described.
2. Remove the governor thrust washer (**Figure 55**), thrust bearing (**Figure 56**) and thrust sleeve (**Figure 57**) from the crankshaft.
3. Using a suitable tool (if available, Yanmar special tool 124085-92700), unscrew the crankshaft nut (A, **Figure 58**).
4. Remove the governor flyweight assembly (B, **Figure 58**).

NOTE
Early model engines may be equipped with a nut on the oil pump shaft.

5. *Early models*—Unscrew the oil pump nut. To prevent the pump gear from rotating, insert an Allen wrench into a pump mounting screw through a hole in the oil pump drive gear.
6. Reach through the holes in the oil pump gear and unscrew the pump retaining screws (**Figure 59**).
7. Remove the oil pump and gasket.
8. Clean any gasket residue from the oil pump and engine.

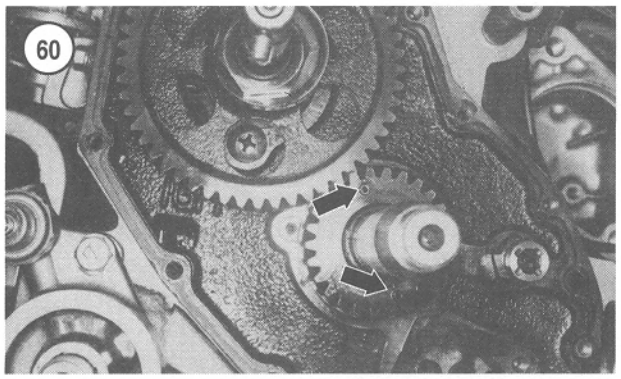

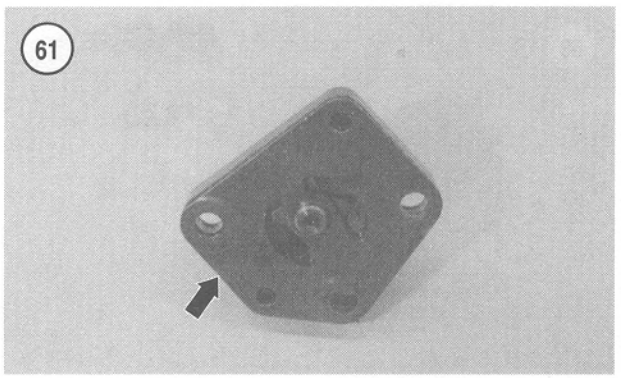

9. Installation is the reverse of removal. Tighten the oil pump retaining screws to the tightening torque specified in **Table 2**. Make sure the governor flyweight assembly is positioned on the locating pins (**Figure 60**). Tighten the crankshaft nut to the torque specified in **Table 2**.

Disassembly, inspection and reassembly

1. Remove the oil pump cover (**Figure 61**).
2. Lift out the inner and outer pump rotors (**Figure 62**).
3. Thoroughly clean all parts in solvent and dry with compressed air.
4. Check the drive spindle and pump rotors for signs of wear, scoring or damage. Replace damaged parts.

NOTE
Replace the oil pump as a unit if any parts are damaged.

5. Reinstall the inner rotor in the pump body. Reinstall the outer rotor in the pump body.
6. Measure the clearance between the inner rotor tip and outer rotor tip (**Figure 63**). Compare the measurement with the specification in **Table 1**.

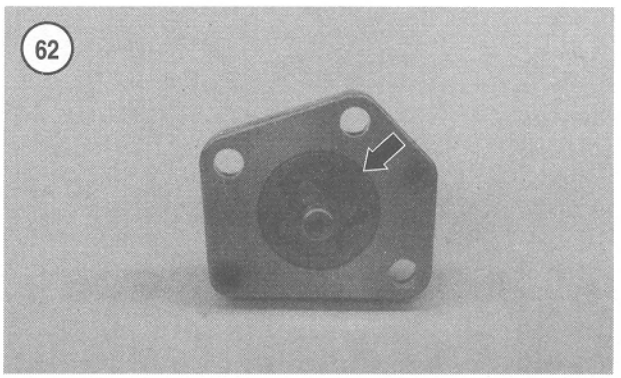

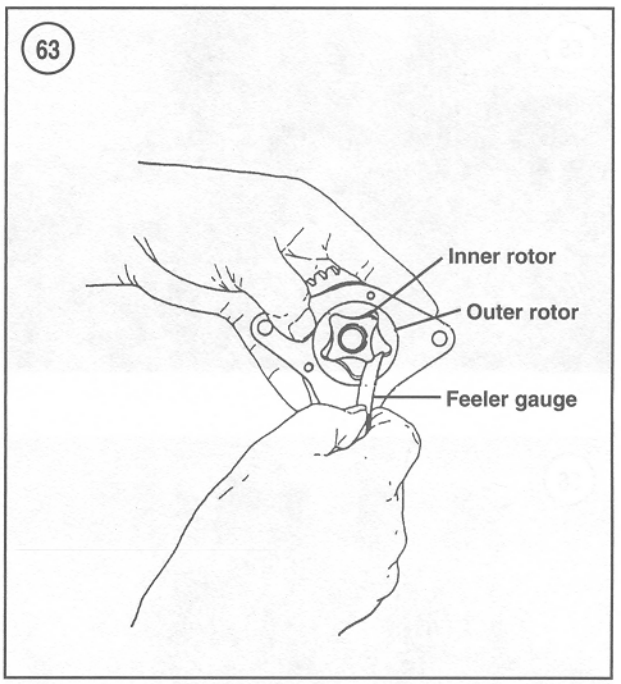

7. Measure the clearance between the outer rotor and the pump body (**Figure 64**). Compare the measurement with specifications in **Table 1**.
8. Place a straightedge across the pump body. Measure the side clearance between the rotors and straightedge with a flat feeler gauge (**Figure 65**). Compare with specifications in **Table 1**.
9. Measure the diameter of the inner rotor shaft. Measure the shaft bore of the pump body. Calculate shaft clearance and compare it with specifications in **Table 1**.
10. If any clearance measured in Steps 6-9 is not within specification, replace the pump. Individual components are not available. The pump must be replaced as a unit.
11. When reassembling the oil pump, make sure to lubricate the rotors, body and shaft with engine oil.

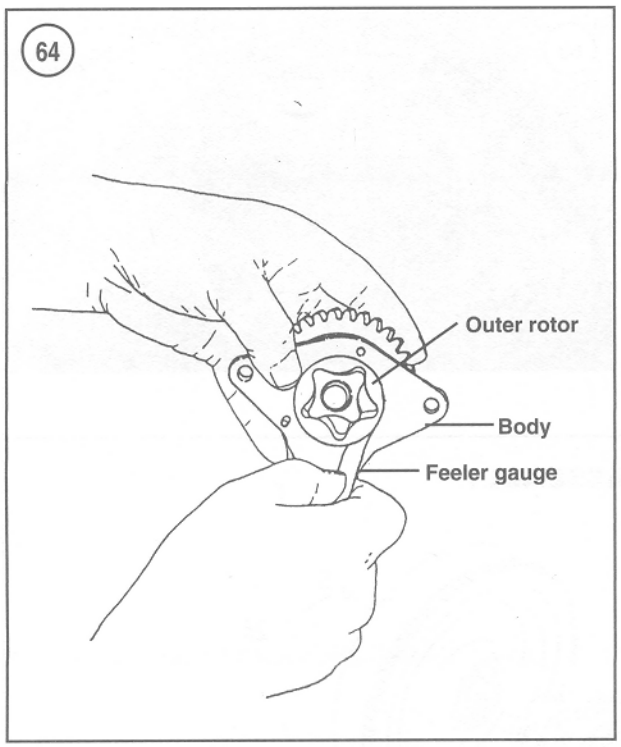

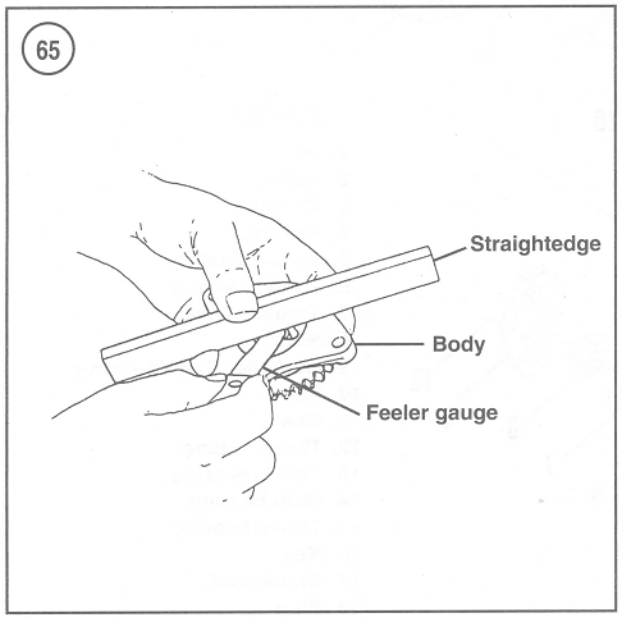

Pressure relief valve

An oil pressure relief valve is threaded into the front (timing gear) of the engine (**Figure 66**). When oil pressure exceeds 300-400 kPa (43-57 psi), the relief valve opens and expels oil into the timing gear area.

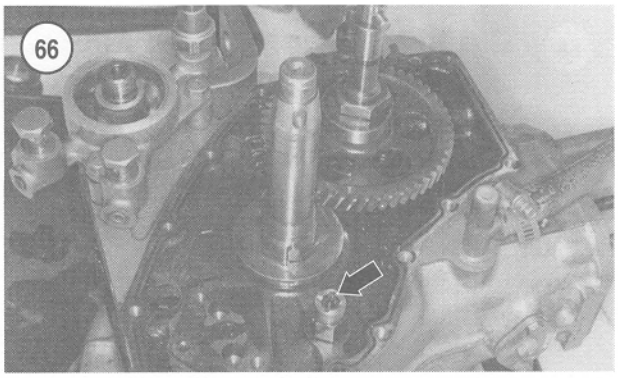

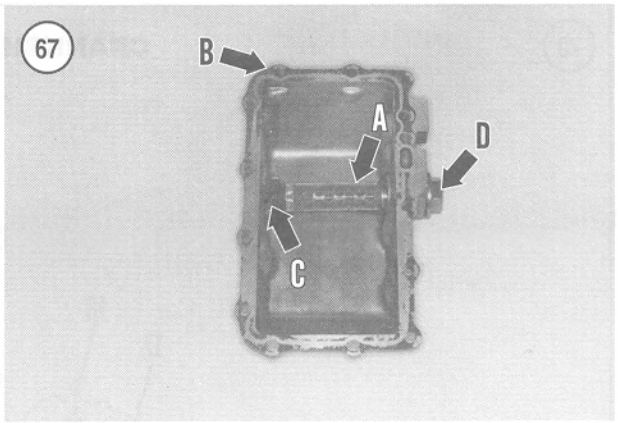

Do not attempt to disassemble the oil pressure relief valve. The valve is sealed and it must be replaced as a unit assembly.

Oil pickup

The oil pickup (A, **Figure 67**) is located in the oil pan (B). The pickup includes a strainer to prevent foreign matter from entering the lubrication system. A spring (C) keeps the pickup in position in the oil pan.

NOTE
When removing the drain plug in the oil pan, be aware that the spring will force the plug out when the threads disengage.

Remove the drain plug (D) for access to the oil pickup.

FLYWHEEL

Removal/Installation

1. Remove the engine from the boat.
2. Remove the transmission.

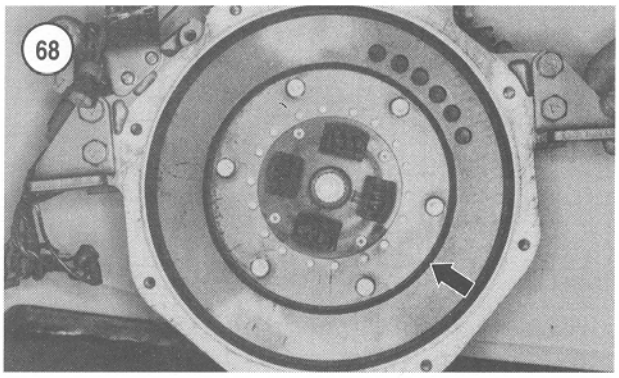

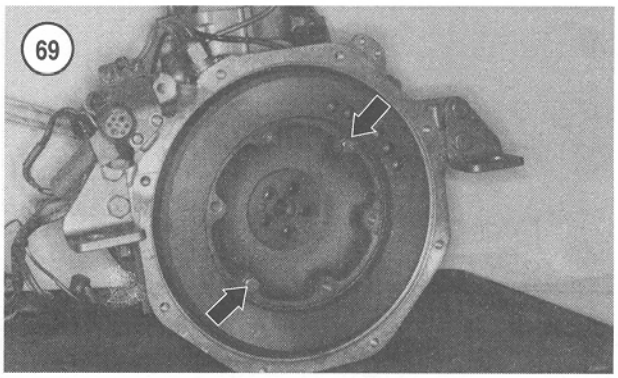

70

CRANKSHAFT ASSEMBLY

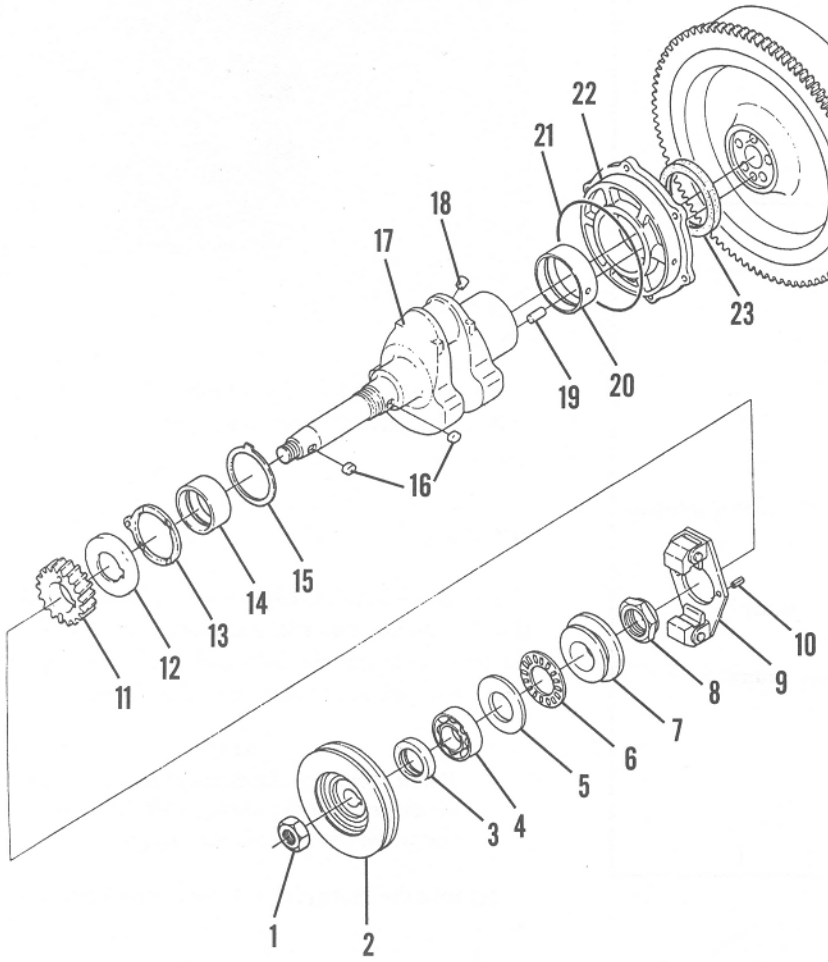

1. Nut
2. Pulley
3. Oil seal
4. Bearing
5. Thrust washer
6. Thrust bearing
7. Thrust sleeve
8. Nut
9. Governor flyweight assy
10. Pin
11. Gear
12. Thrust washer
13. Thrust bearing
14. Main bearing
15. Thrust bearing
16. Key
17. Crankshaft
18. Plug
19. Pin
20. Main bearing
21. O-ring
22. Main bearing holder
23. Oil seal
24. Flywheel
25. Bolt

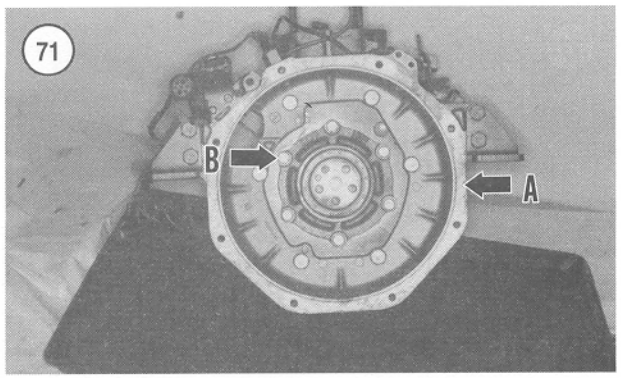

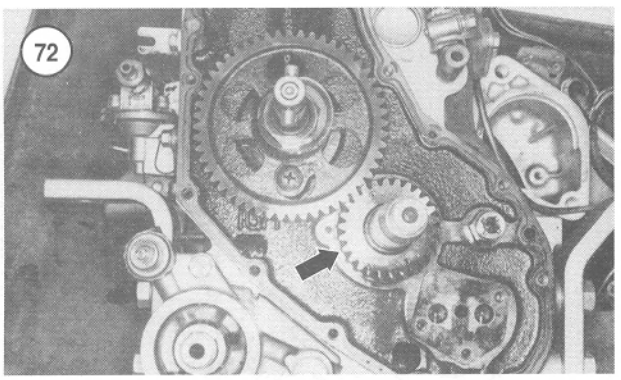

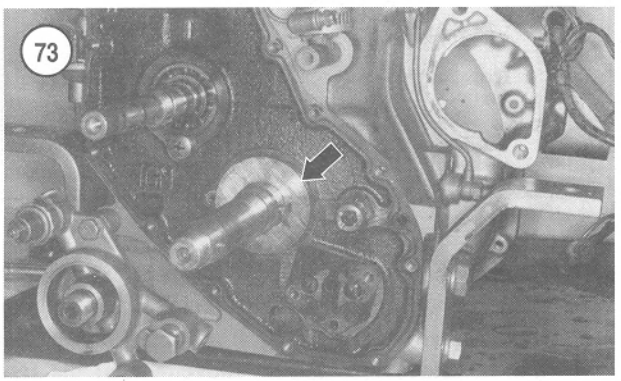

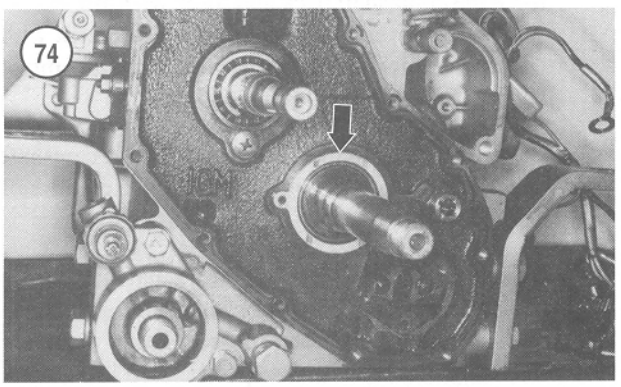

3. Remove the drive disc (**Figure 68**).
4. Gradually loosen and remove the flywheel bolts, working in a diagonal pattern. Install two drive disc bolts into two outer holes in the flywheel (**Figure 69**), then use the screws to pull and remove the flywheel.
5. Inspect the ring gear. If the ring gear is excessively worn or damaged, use the following procedure to remove the ring gear:
   a. Heat the ring gear evenly, then drive the ring gear off the flywheel.
   b. Heat the ring gear prior to installation. Drive the ring gear onto the flywheel, being careful not to damage the gear teeth.
6. Reverse the removal procedure to install the flywheel. Tighten the flywheel retaining bolts to the torque specified in **Table 2**. Refer to Chapter Ten to install the drive disc and transmission.

DRIVE DISC

Refer to Chapter Ten for drive disc procedures (**Figure 68**).

CRANKSHAFT

Removal and Installation

Refer to **Figure 70**.
1. Remove the flywheel as previously described.
2. Remove the bellhousing (A, **Figure 71**).
3. Remove the piston and connecting rod as previously described.
4. Remove the oil pump as previously described.
5. Remove the crankshaft gear (**Figure 72**).
6. Refer to *Camshaft* to remove the camshaft gear.
7. Remove the thrust washer (**Figure 73**) and thrust bearing (**Figure 74**).

NOTE
Support the crankshaft while removing the main bearing housing in the next step.

8. Remove the main bearing housing (B, **Figure 71**).
9. Remove the crankshaft.
10. Proceed as follows to replace the crankshaft seal in the main bearing housing:
   a. Pry the old seal from the main bearing housing with a large screwdriver. Work carefully to prevent damage to the main bearing housing seal surface.
   b. Clean the seal recess in the housing with solvent and dry with compressed air.
   c. Apply gasket sealer to the periphery of the seal.

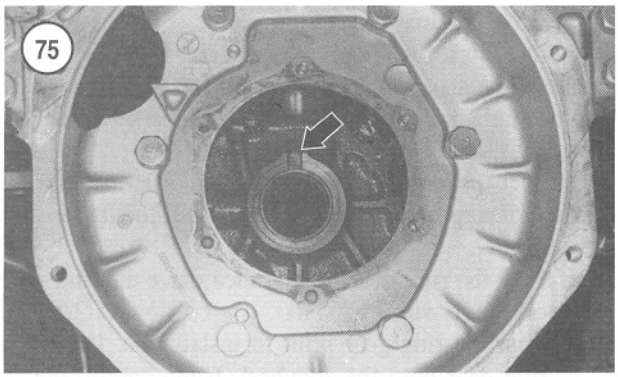

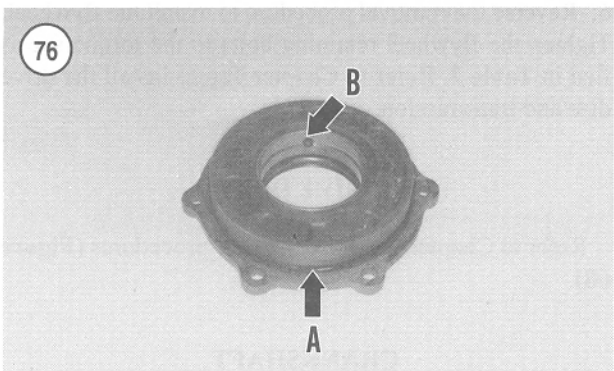

d. Position the new seal in the housing recess with its open end facing the inside of the bearing housing. Drive the seal into place with a suitably sized seal driver.

11. Refer to *Main Bearings* for information concerning inspection of the main bearings and thrust bearings.

12. Reinstall the crankshaft by reversing the removal procedure while noting the following:

a. Thoroughly lubricate the main bearings and thrust bearings.

b. Install the inner, front thrust bearing so the oil grooves are toward the inside of the crankcase and the tab fits into the recess (**Figure 75**) in the crankcase. Apply a light coating of grease to hold the thrust bearing in place.

c. Install a new O-ring (A, **Figure 76**) on the main bearing housing.

d. Tighten the main bearing housing bolts to the torque specified in **Table 2**.

e. Install the outer front thrust bearing so the oil grooves (A, **Figure 77**) are toward the outside of the crankcase and the tab (B) fits onto the pin in the crankcase.

f. Install the thrust washer (**Figure 73**) so the beveled side of the inner hole is toward the crankcase.

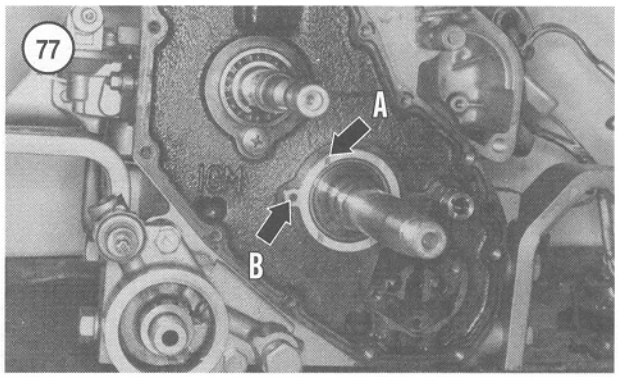

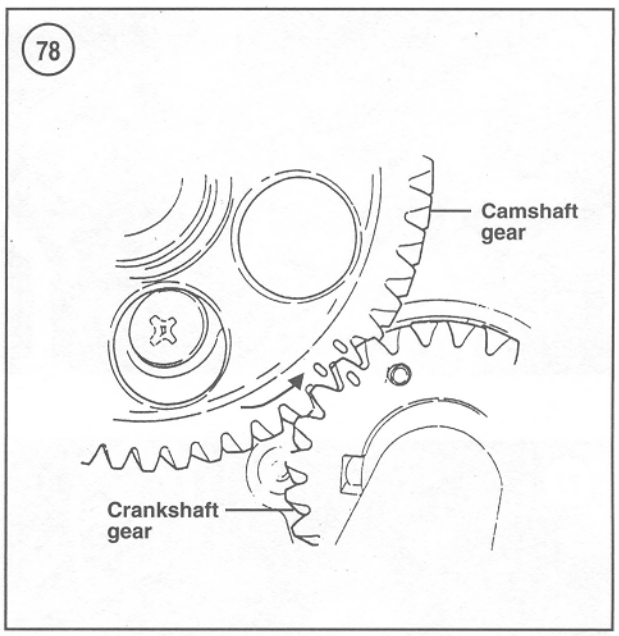

g. Measure crankshaft end play by inserting a feeler gauge between the crankshaft main journal and the inner thrust bearing, or by installing a dial gauge that measures fore and aft movement of the flywheel or crankshaft. Using a large screwdriver, force the crankshaft back and forth. Measure crankshaft end play and compare the measurement with the specification in **Table 1**. Replace the inner thrust bearing to obtain the desired end play.

h. Align the timing marks (**Figure 78**) on the camshaft and crankshaft gears when installing the crankshaft gear.

i. Check gear backlash by installing a dial indicator as shown in **Figure 79** or by rotating the gear teeth with soft solder between the gear teeth. Compare the measurement with the specification in **Table 1**.

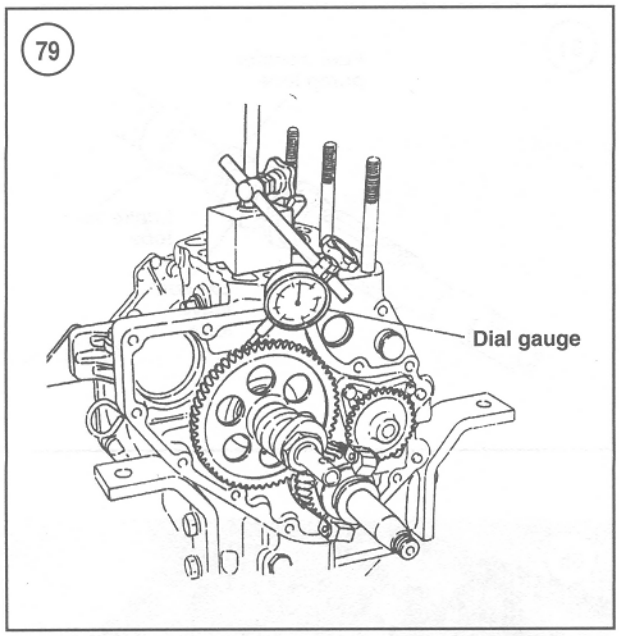

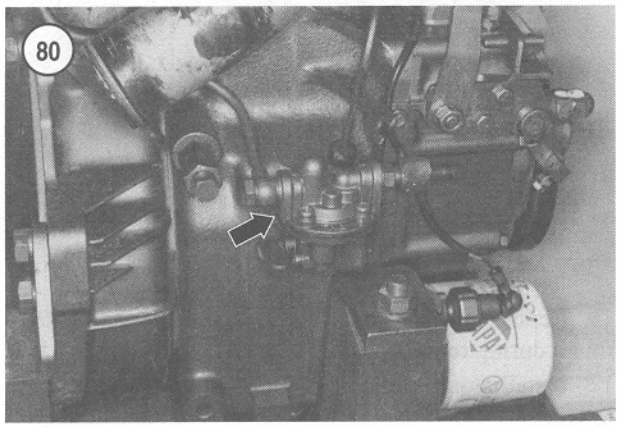

If gear backlash is incorrect, replace the camshaft and crankshaft gears.

Inspection

1. Clean the crankshaft thoroughly with solvent. Blow out the oil passages with compressed air.
2. Check the main and connecting rod journals for wear, scratches, grooves, scoring or cracks. Check the oil seal contact surface for burrs, nicks or other sharp edges that might damage a seal during installation.

NOTE

Unless precision measuring equipment is available, have a machine shop perform Step 3.

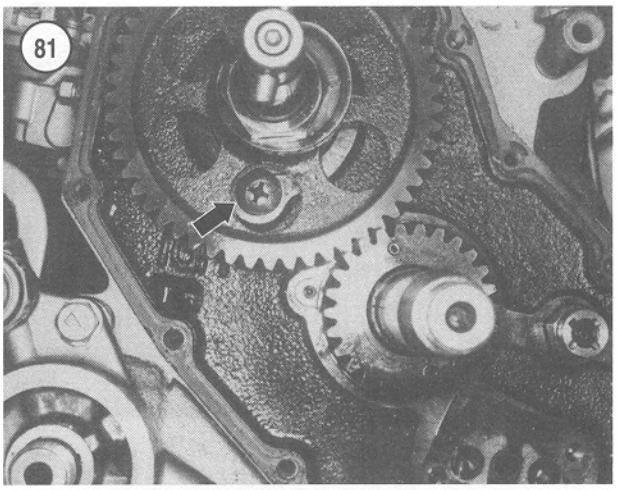

3. Check all journals against specifications (**Table 1**) for out-of-roundness and taper. Have the crankshaft reground, if necessary, and install new undersize bearings.

MAIN BEARINGS

The crankshaft is supported at each end by bushing-type main bearings. The front main bearing is located in the crankcase and the rear main bearing is located in the removable main bearing carrier. Thrust bearings located at the front of the crankshaft control crankshaft end play. Refer to **Figure 70**.

Remove the crankshaft as described in the previous section for access to the main bearings and thrust washers. Unless precision measuring equipment is available, have a dealership or machine shop measure main bearing dimensions. Refer to specifications in **Table 1**.

If bearing replacement is necessary, have the main bearings replaced by a dealership or machine shop. Make sure the oil holes (B, **Figure 76**) in the main bearings align with the oil passages in the crankcase and main bearing carrier.

CAMSHAFT

Removal and Installation

1. Remove the fuel transfer pump (**Figure 80**).
2. Remove the crankshaft as previously described.
3. Prevent rotation of the camshaft gear by holding a screwdriver or other tool against the camshaft bearing retaining screw (**Figure 81**).
4. Remove the camshaft gear nut (A, **Figure 82**), fuel injection pump cam (B) and camshaft gear (C).
5. Position the engine so the valve lifters will not fall out when the camshaft is withdrawn/removed.

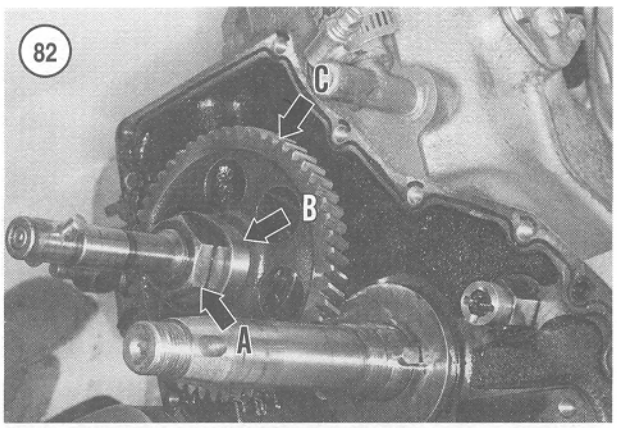

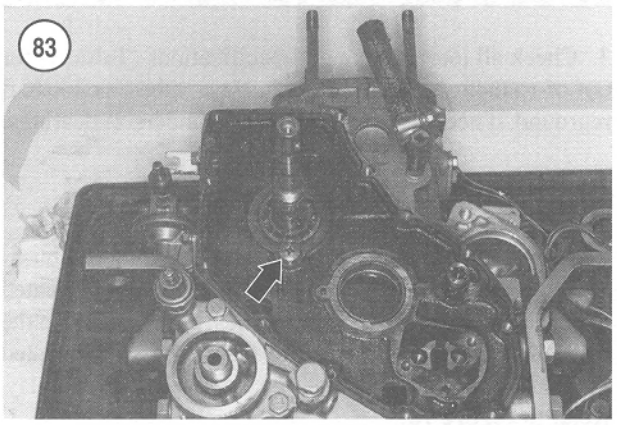

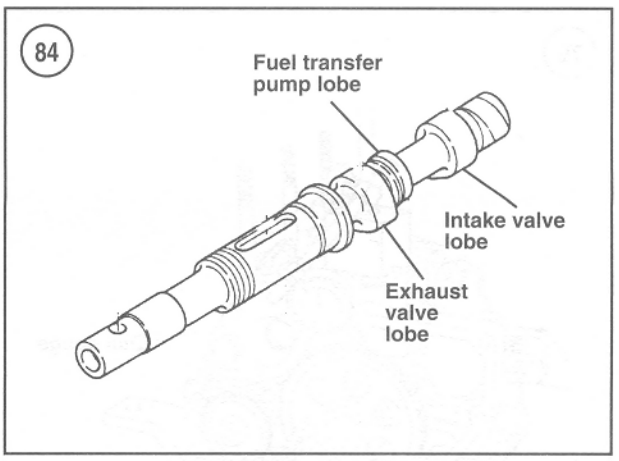

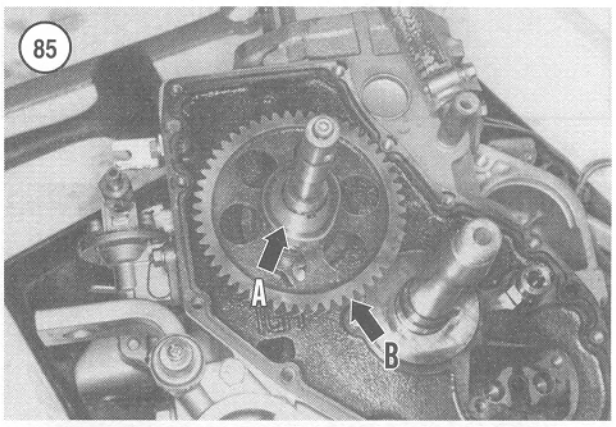

6. Remove the bearing retaining screw (**Figure 83**), then withdraw the camshaft.
7. Remove the valve lifters and mark them so they may be reinstalled in their original locations.
8. Check the rear bearing journal and lobes for signs of wear or scoring.

NOTE

If precision measuring equipment is not available, have a dealership or machine shop perform Step 9.

9. Measure the rear camshaft journal diameter and lobes (**Figure 84**) and compare the measurement to the specification in **Table 1**. Replace the camshaft if the journal or lobes do not meet specifications.
10. Measure the stem diameter of the valve lifters and compare the measurement to the specification in **Table 1**. Measure the lifter bores in the cylinder block. Calculate the lifter clearance and compare it with the specification in **Table 1**. Replace the valve lifters if they do not meet specifications. Replace the valve lifter if the lifter face is scored, galled, excessively worn or otherwise damaged.
11. Replace the ball bearing if it is damaged or feels rough during rotation.
12. Installation is the reverse of removal. Note the following:
    a. If installing a new camshaft, coat the camshaft lobes with camshaft break-in lubricant. If reinstalling the original camshaft, apply heavy oil to the camshaft lobes.
    b. Lubricate the camshaft bearing journal with heavy engine oil before reinstallation.
    c. Lightly tap the end of the camshaft to seat the ball bearing in the engine. Rotate the camshaft to be sure it rotates freely.
    d. Align the timing marks (**Figure 78**) on the camshaft and crankshaft gears when installing the camshaft gear.
    e. Install the fuel injection cam so the side marked with a zero is out (**Figure 85**).
    f. Check gear backlash by installing a dial indicator as shown in **Figure 79** or by rotating the gear teeth with soft solder between the gear teeth. Compare

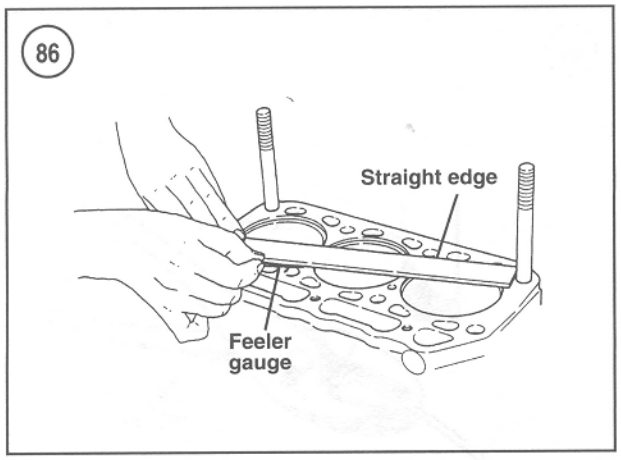

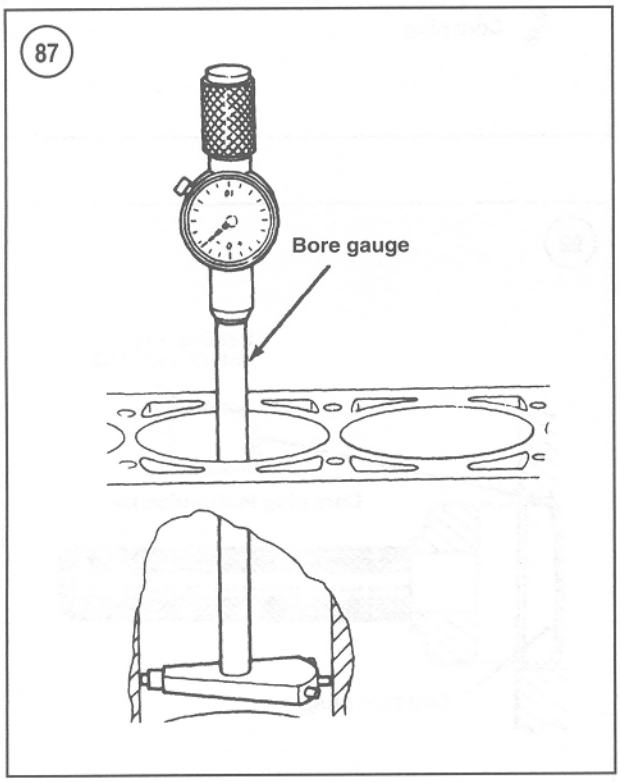

the measurement with the specification in **Table 1**. If gear backlash is incorrect, replace the camshaft and crankshaft gears.

CYLINDER BLOCK

Cleaning and Inspection

1. Clean the block thoroughly with solvent. Remove any gasket or RTV sealant residue from the machined surfaces. Check all core plugs for leaks and replace any that are suspect. See *Core Plug Replacement* in this chapter. Check oil and coolant passages for sludge, dirt and corrosion while cleaning. If the passages are very dirty, have the block boiled out by a machine shop. Blow out all passages with compressed air. Check the threads in the head bolt holes to make sure they are clean. If dirty, use a tap to restore the threads and remove any deposits.

2. Examine the block for cracks. To confirm suspicions about possible leakage areas, use a mixture of one part kerosene and two parts engine oil. Coat the suspected area with this solution, then wipe dry and immediately apply a solution of zinc oxide dissolved in wood alcohol. If any discoloration appears in the treated area, the block is cracked and should be replaced.

3. Check the flatness of the cylinder block deck or top surface. Place an accurate straightedge on the block. If there is any gap between the block and straightedge, measure it with a flat feeler gauge (**Figure 86**). Measure from end to end and from corner to corner. Have the block resurfaced if it is warped more than 0.07 mm (0.0028 in.).

4. Measure the cylinder bore with a bore gauge (**Figure 87**) for out-of-roundness or excessive wear as described in *Piston/Cylinder Bore Check* in this chapter. If the cylinder exceeds maximum tolerances, rebore the cylinder. Rebore the cylinder if the cylinder walls are badly scuffed, scored or otherwise damage.

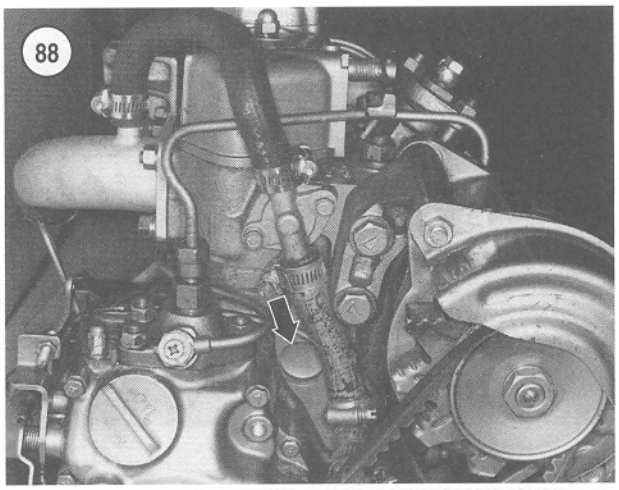

Core Plug Replacement

Check the condition of the front (**Figure 88**) and rear (**Figure 89**) core plugs in the block whenever the engine is out of the boat for service. If any signs of leakage or corrosion are found around one core plug, replace both of them.

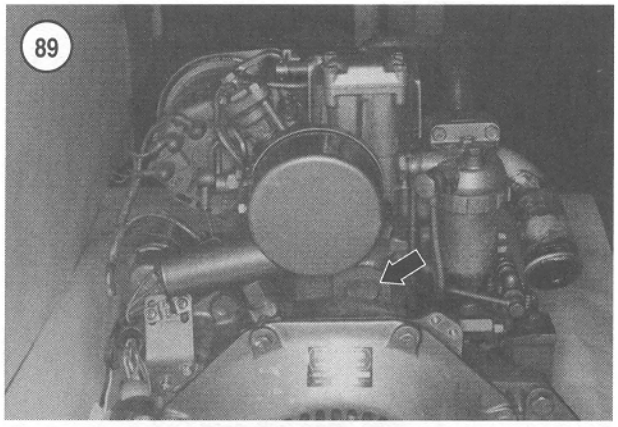

89

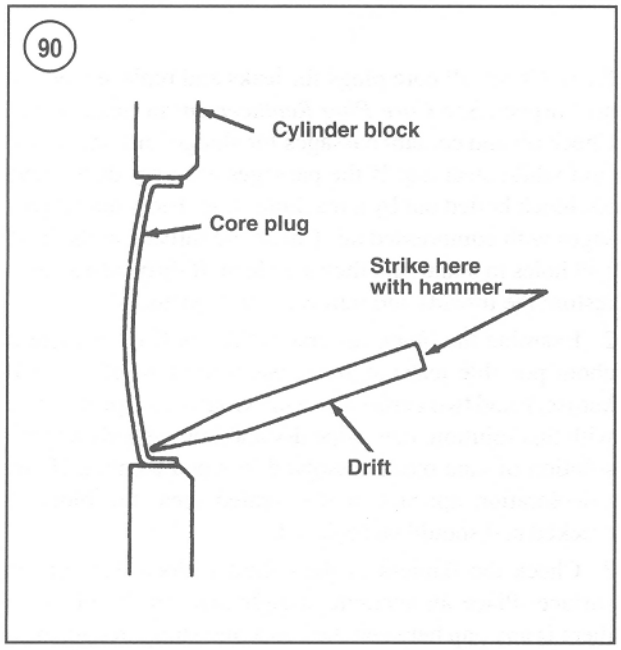

90

Core plugs in the cylinder block prevent damage to the block should the coolant freeze.

NOTE

Core plugs can be replaced inexpensively by a machine shop. If machine work is being performed on the engine, have the core plugs replaced at the same time.

Removal/Installation

CAUTION

Do not drive core plugs into the engine casting. It will be impossible to retrieve them and they can restrict coolant circulation, resulting in serious engine damage.

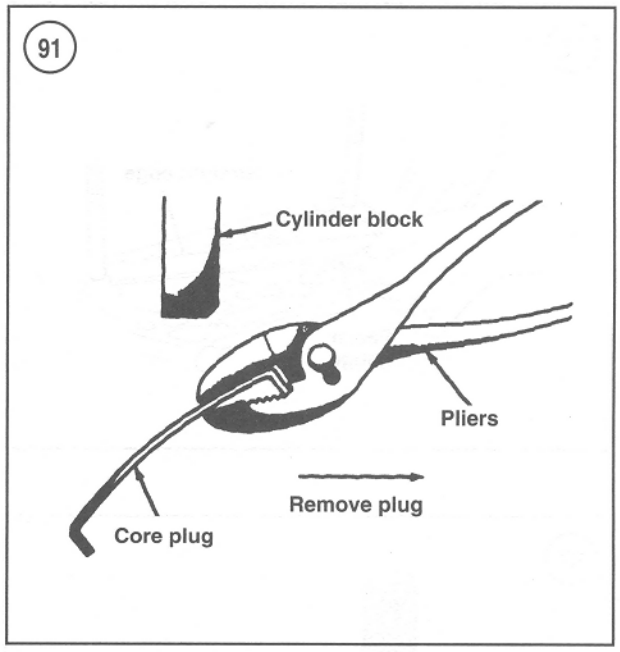

91

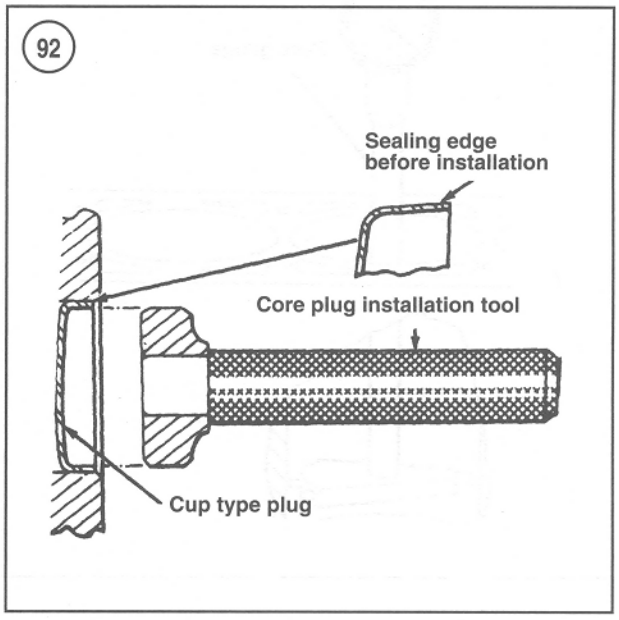

92

1. Tap the bottom edge of the core plug with a hammer and drift. Use several sharp blows to push the bottom of the plug inward, tilting the top out (**Figure 90**).

2. Grip the top of the plug firmly with pliers. Pull the plug from its bore (**Figure 91**) and discard it.

NOTE

The core plugs can also be removed by drilling a hole in the center of the plug and pry-

ing it out with an appropriate size drift or pin punch. When removing a large core plug, the use of a universal impact slide hammer is recommended.

3. Clean the plug bore thoroughly to remove all traces of the old sealer. Inspect the bore for any damage that might interfere with proper sealing of the new plug.

4. Coat the inside diameter of the plug bore and the outer diameter of the new plug with sealer. Use an oil-resistant sealer if the plug is to be installed in an oil gallery or a water-resistant sealer for plugs installed in the water jacket.
5. Install the new core plug with an appropriate size core plug installation tool (**Figure 92**), driver or socket. The outside edge of the plug should be 2-3 mm (0.08-0.12 in.) inside the block.
6. Repeat Steps 1-5 to replace each remaining core plug.

Table 1 ENGINE SPECIFICATIONS (1GM, 1GM10)

Bore	75 mm (2.95 in.)
Stroke	72 mm (2.83 in.)
Displacement	318 cc (19.4 cu. in.)
Number of cylinders	1
Cylinder bore diameter	75.000-75.030 mm (2.9528-2.9540 in.)
Bore out-of-round—max.	0.02 mm (0.0008 in.)
Cylinder block warpage—max.	0.07 mm (0.0028 in.)
Piston diameter	
Standard	74.910-74.940 mm (2.9492-2.9504 in.)
Wear limit	74.850 mm max. (2.9468 in.)
Piston top clearance	0.68-0.88 mm (0.027-0.035 in.)
Piston ring side clearance	
Top ring	0.065-0.100 mm (0.0026-0.0039 in.)
Second ring	0.035-0.070 mm (0.0014-0.0028 in.)
Oil ring	0.020-0.055 mm (0.0008-0.0022 in.)
Ring end gap (all rings)	0.20-0.40 mm (0.008-0.016 in.)
Piston pin diameter	19.991-20.000 mm (0.7870-0.7874 in.)
Piston pin hole diameter	
In piston	19.995-20.008 mm (0.7872-0.7877 in.)
In rod	20.000 mm (0.7874 in.)
Piston pin clearance	
In rod	0.025-0.047 mm (0.0010-0.0019 in.)
In piston	0.005 mm tight-0.017 mm loose (0.0002 in. tight-0.0007 in. loose)
Piston ring width	
Top & second ring	1.97-1.99 mm (0.0776-0.0783 in.)
Oil control ring	3.97-3.99 mm (0.1563-0.1571 in.)
Crankshaft main journal diameter	
Timing gear end	43.950-43.964 mm (1.7303-1.7309 in.)
Flywheel end	59.950-59.964 mm (2.3602-2.3608 in.)
Journal out-of-round—max.	0.01 mm (0.0004 in.)
Crankshaft end play	0.06-0.19 mm (0.0024-0.0075 in.)
Crankshaft runout—max.	0.15 mm (0.006 in.)
Main bearing clearance	
Timing gear end	0.036-0.092 mm (0.0014-0.0036 in.)
Flywheel end	0.036-0.095 mm (0.0014-0.0037 in.)
Crankshaft thrust bearing—min.	
Front	2.75 mm (0.108 in.)
Inner	2.25 mm (0.089 in.)
Crankpin diameter	39.950-39.964 mm (1.5728-1.5734 in.)
Journal out-of-round—max.	0.01 mm (0.0004 in.)
Crankpin bearing clearance	0.028-0.086 mm (0.0011-0.0034 in.)
Connecting rod side clearance	0.2-0.4 mm (0.008-0.016 in.)
Cylinder head warpage—max.	0.07 mm (0.003 in.)

(continued)

Table 1 ENGINE SPECIFICATIONS (1GM, 1GM10) (continued)

Camshaft	
Valve lobe lift	29.000 mm (1.1417 in.)
Fuel pump lobe lift	22.000 mm (0.8661 in.)
Journal diameter	20.000 mm (0.7874 in.)
Runout	0.02 mm max. (0.0008 in. max.)
Timing gear backlash	0.05-0.13 mm (0.002-0.005 in.)
Maximum allowable	0.3 mm (0.012 in.)
Push rod runout—max.	0.03 mm (0.0012 in.)
Valve lifter	
Type	Mechanical
Outside diameter	10.000 mm (0.3937 in.)
Outside diameter—min.	9.95 mm (0.3917 in.)
Clearance in block	0.025-0.060 mm (0.0010-0.0024 in.)
Max. clearance	0.10 mm (0.004 in.)
Valve face angle	45°
Valve seat angle	45°
Valve head margin	0.75-1.15 mm (0.030-0.045 in.)
Seat width (int. and exh.)	1.77 mm (0.070 in.)
Valve depth—max.	1.25 mm (0.049 in.)
Valve stem clearance (int. and exh.)	0.045-0.070 mm (0.0018-0.0028 in.)
Max. stem clearance	0.15 mm (0.006 in.)
Valve stem diameter	7.000 mm (0.2756 mm)
Valve stem wear limit	6.900 mm (0.2717 in.)
Valve stem runout—max.	0.03 mm (0.0012 in.)
Valve guide diameter	7.000 mm (0.2756 mm)
Valve guide wear limit	7.080 mm (0.2878 in.)
Valve guide protrusion	7.0 mm (0.276 in.)
Valve spring	
Standard free length	38.5 mm (1.52 in.)
Min. free length	37 mm (1.46 in.)
Installed height	29.2 mm (1.15 in.)
Pressure at installed height	16.16 kg at 29.2 mm (35.63 lb. at 1.15 in.)
Rocker arm shaft clearance	0.016-0.052 mm (0.0006-0.0020 in.)
Rocker arm shaft clearance—max.	0.15 mm (0.006 in.)
Rocker arm bore wear limit	12.10 mm (0.476 in.)
Rocker arm shaft wear limit	11.90 mm (0.468 in.)
Oil pump	
Inner rotor tip-to-outer rotor tip	0.050-0.105 mm (0.0020-0.0041 in.)
Max.	0.15 mm (0.006 in.)
Outer rotor-to-pump body	0.050-0.105 mm (0.0020-0.0041 in.)
Max.	0.15 mm (0.006 in.)
Rotor side clearance	0.030-0.080 mm
Max.	0.13 mm (0.005 in.)
Shaft clearance	0.015-0.050 mm (0.0006-0.0020 in.)
Max.	0.20 mm (0.0079 in.)

Table 2 TIGHTENING TORQUES

Fastener	N•m	ft.-lb.	in.-lb.
Camshaft gear	70-80	52-59	–
Connecting rod bolts	25	18	–
Crankshaft nut	80-100	59-74	–
Cylinder head nut	75	55	–
Exhaust elbow	45	33	–
Flywheel	65-70	48-52	–
Main bearing housing	25	18	–
Oil pump	9	–	80
Rocker shaft support	37	27	–
Timing gearcase	9	–	80

Chapter Six

Multicylinder Engines

This chapter covers the Yanmar 2GM, 2GM20, 3GM, 3GM30, 3HM and 3HM35 multicylinder, marine diesel engines.

The engine consists of a cast iron cylinder block with full-length water jackets around each cylinder. 2GM, 3GM, 3HM (including F and D series) engines have replaceable cast iron cylinder liners.

Crankshaft rotation is counterclockwise as viewed from the flywheel. On two cylinder engines, the crankshaft operates in three main bearings, with the center bearing providing the thrust surfaces. On three cylinder engines, the crankshaft operates in four main bearings, with the third bearing providing the thrust surfaces. The crankshaft gear drives the rotor-type oil pump located in the lower front of the engine block.

The camshaft is gear driven and located in the block above the crankshaft. One end of the camshaft is supported by a ball bearing (front) and the other rides directly in the block (rear).

On three cylinder engines, the camshaft is equipped with two additional bearings. In addition to operating the valves, the camshaft operates the fuel transfer pump and has an actuating lobe for the injection pump attached at the front.

Valve actuation is via mechanical lifters and pushrods acting on the rocker arms mounted in the cylinder head.

The cylinders on 2GM and 2GM20 engines are numbered from rear (flywheel) to front (timing gearcase): 1-2.

The cylinders on 3GM, 3GM30, 3HM and 3HM35 engines are numbered from rear (flywheel) to front (timing gearcase): 1-2-3. The firing order is 1-2-3.

Engine specifications (**Tables 1-3**) and tightening torques (**Table 4**) are located at the end of this chapter.

Refer to Chapter Five for diesel engine fundamentals.

NOTE

Except where specified, F and D series engines are included when a basic model number is specified. For example, if model 3GM is called out in a procedure, the procedure also applies to 3GMD and 3GMF.

ENGINE SERIAL NUMBER AND CODE

The engine serial number and model designation plate is attached to the timing gearcase (**Figure 1**). The engine serial number is also stamped on the side of the cylinder block (**Figure 2**).

Have the engine model number and serial number available when ordering parts. Record the engine model and serial numbers and store them for future reference in case the identification plate on the engine is defaced or lost.

REPLACEMENT PARTS

When installing new parts on the engine, make sure the part is designed for use on a marine engine. Automotive and marine engine parts may look similar; however, automotive parts may not be capable of operating in a harsh marine environment.

Use only Yanmar parts or parts approved for use on marine engines.

ENGINE

Precautions

Some service procedures can be performed with the engine in the boat; others require removal. The boat design and service procedure to be performed determines whether the engine must be removed.

WARNING
The engine is heavy, awkward to handle and has sharp edges. It may shift or drop suddenly during removal. To prevent serious injury, always observe the following precautions.

1. Never place any part of your body where a moving or falling engine may trap, cut or crush you.
2. If you must push the engine during removal, use a board or similar tool to keep your hands out of danger.
3. Be sure the hoist is designed to lift engines and has enough load capacity for the engine.
4. Be sure the hoist is securely attached to safe lifting points on the engine.
5. The engine should not be difficult to lift with a proper hoist. If it is, stop lifting, lower the engine back onto its mounts and make sure the engine has been completely separated from the vessel.

Removal/Installation

While specific procedures cannot address all engine installations, refer to the following general instructions when removing the engine.

1. Detach the negative battery cable from the negative battery terminal.
2. Close the seacock. Drain the cooling system, including the freshwater system, if so equipped, as described in Chapter Four.
3. Disconnect the intake water hose from the seawater cooling pump.
4. Close the fuel shutoff valve and disconnect the fuel line and the fuel return line.
5. Disconnect the remote control cables.
6. Disconnect the electrical wiring harness connectors.
7. Disconnect the electrical wires from the electric starter motor and solenoid that will interfere with engine removal.
8. Detach the exhaust system.
9. Detach the driveshaft from the transmission output flange.
10. Remove the engine retaining bolts.
11. Remove the engine and transmission.
12. Remove the transmission from the engine as described in Chapter Ten or Eleven.

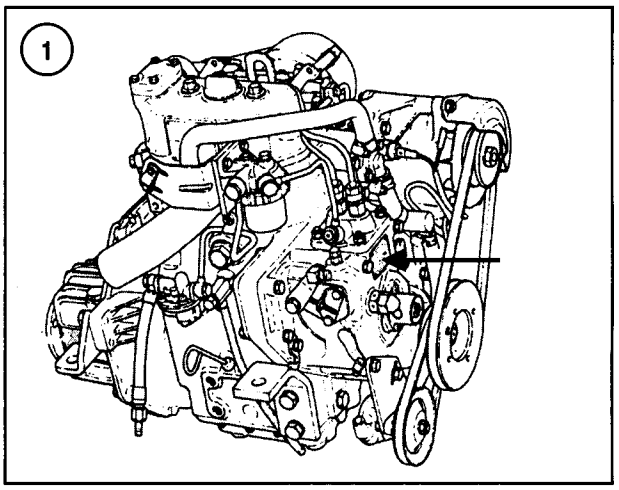

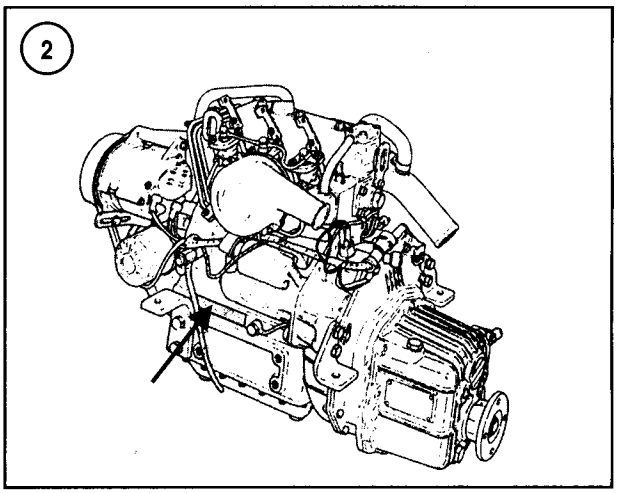

3

VALVE COVER
(2GM, 2GM20, 3GM AND 3GM30 MODELS)

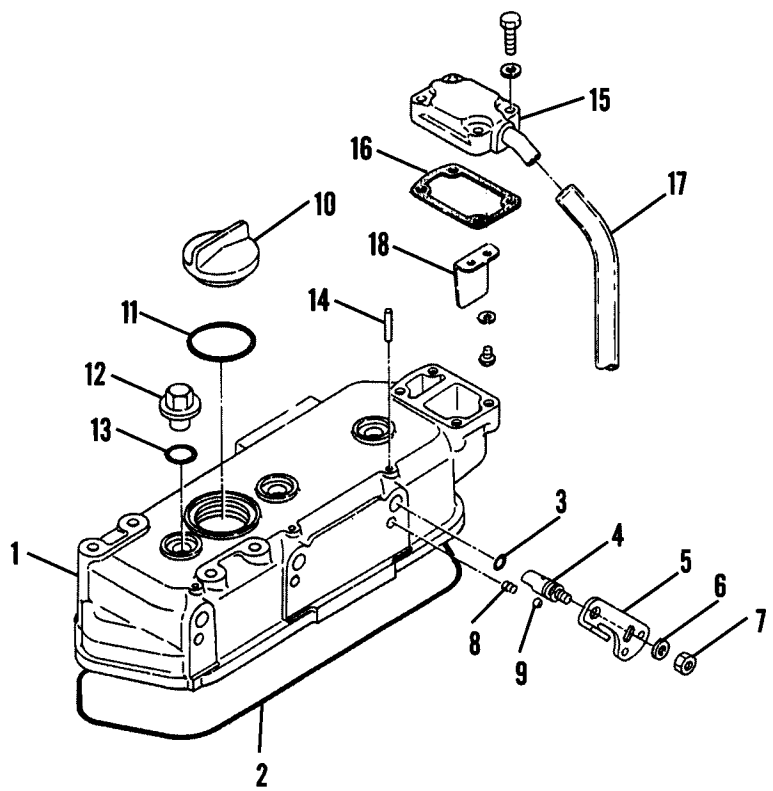

1. Valve cover
2. Gasket
3. O-ring
4. Decompression shaft
5. Decompression lever
6. Washer
7. Nut
8. Spring
9. Detent ball
10. Oil fill cap
11. O-ring
12. Nut
13. O-ring
14. Pin
15. Breather
16. Gasket
17. Hose
18. Baffle

13. Engine installation is the reverse of removal, plus the following:
   a. Tighten the engine mounting bolts securely.
   b. Securely tighten the output flange-to-driveshaft bolts.
   c. Bleed the fuel system at the fuel filter as described under *Fuel Filter* in Chapter Three.
   d. Refill the freshwater cooling system, if so equipped, as described in Chapter Eight.

VALVE COVER

Refer to **Figure 3** and **Figure 4** for an exploded view of the valve cover assembly.

To remove the valve cover, proceed as follows:

1. Be sure the decompression lever is in the OFF position.
2. Disconnect the breather hose.
3. Unscrew the retaining nuts.
4. Remove the valve cover.
5. Remove the gasket.
6. Clean the gasket surfaces on the valve cover and cylinder head.
7. Reverse the removal steps to install the valve cover.

BREATHER ASSEMBLY

The crankcase breather is located in the valve cover. Refer to Chapter Three for a description of breather operation.

To service the breather, proceed as follows:

1. Remove the valve cover.
2. Remove the breather cover.

4

VALVE COVER
3HM AND 3HM35 MODELS

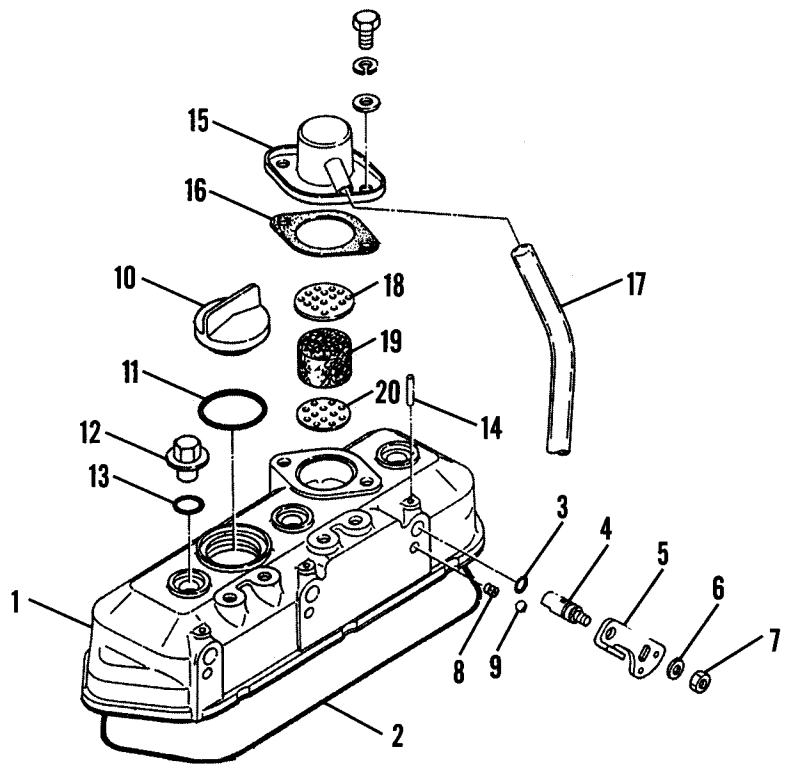

1. Valve cover
2. Gasket
3. O-ring
4. Decompression shaft
5. Decompression lever
6. Washer
7. Nut
8. Spring
9. Detent ball
10. Oil fill cap
11. O-ring
12. Nut
13. O-ring
14. Pin
15. Breather
16. Gasket
17. Hose
18. Upper baffle
19. Filter
20. Lower baffle

3. Clean the breather components and valve cover using solvent. Be sure the drain hole in the valve cover is open.
4. *3HM and 3HM35 models*—Replace the mesh breather element if it cannot be cleaned or if it is damaged.
5. Reassemble the breather by reversing the disassembly procedure. Note that the lower baffle (20, **Figure 4**) on 3HM and 3HM35 engines is smaller than the upper plate (18).

DECOMPRESSION MECHANISM

The decompression mechanism on the valve cover forces the exhaust valves open to reduce compression pressure in the cylinders. Reducing compression pressure enables the starter to rotate the crankshaft faster during starting. Refer to **Figure 3** and **Figure 4**.

If the mechanism must be repaired, proceed as follows:

1. Remove the valve cover as previously described.
2. Using a suitable punch, drive out the retaining pin.

NOTE
The detent ball and spring will be loose when you remove the shaft assembly in Step 3.

3. Remove the shaft assembly from the valve cover.
4. Inspect the mechanism and replace the damaged parts.
5. Reverse the removal procedure to reassemble the decompression mechanism. Note the following:
   a. Assemble the shaft and lever so the lever points up while the flat on the valve end of the shaft is down.

5

EXHAUST MANIFOLD

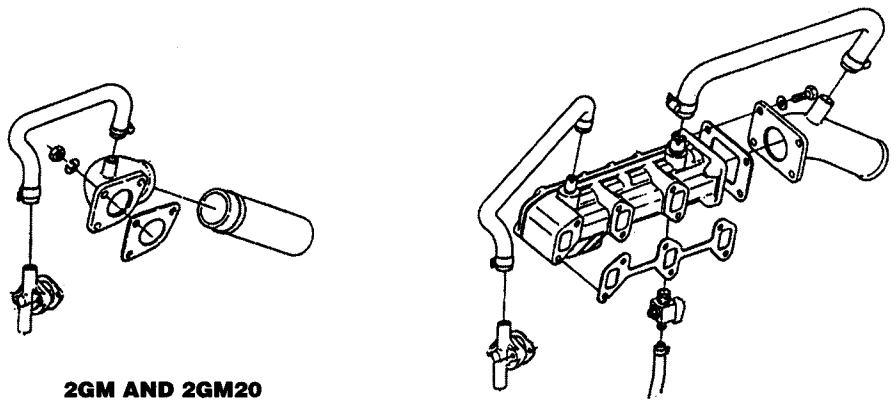

2GM AND 2GM20 MODELS

3GM, 3GM30, 3HM AND 3HM35 MODELS

EXHAUST MANIFOLD

On 2GM models, the exhaust manifold is an elbow that is attached to the cylinder head (**Figure 5**). A hose from the thermostat cover directs cooling water into the exhaust elbow.

On 3GM models, the exhaust manifold contains water passages that allow water to cool the manifold. A hose from the thermostat cover directs cooling water into the exhaust manifold (**Figure 5**). A hose from the exhaust manifold directs water from the exhaust manifold into the exhaust elbow.

The exhaust manifold on 2GMF, 2GM20F, 3GMF, 3GM30F, 3HMF and 3HM35F models is combined with the coolant reservoir for the freshwater (closed) cooling system (**Figure 6**). Refer to Chapter Eight for a description of the freshwater (closed) cooling system.

Removal and Installation

2GM models

Refer to **Figure 5**.

1. Detach the exhaust hose from the exhaust elbow.
2. Loosen the hose clamps and remove the water hose from the exhaust elbow and thermostat housing.
3. Remove the exhaust elbow from the cylinder head.
4. Clean any gasket residue from the exhaust elbow and cylinder head.
5. Check the exhaust elbow for warpage, carbon buildup and corrosion.
6. Reinstall the exhaust elbow by reversing the removal procedure. Tighten the retaining nuts to the torque specified in **Table 2**.

3GM, 3GM30, 3HM and 3HM35 models with seawater cooling

Refer to **Figure 5**.

1. Detach the exhaust hose from the exhaust elbow.
2. Loosen the hose clamps and remove the water hose from the exhaust manifold and thermostat housing.
3. Open the drain valve on the underside of the exhaust manifold.
4. Remove the exhaust manifold from the cylinder head.
5. If necessary, remove the water hose and exhaust elbow from the exhaust manifold.

6

EXHAUST MANIFOLD WITH CLOSED COOLING SYSTEM (TYPICAL)

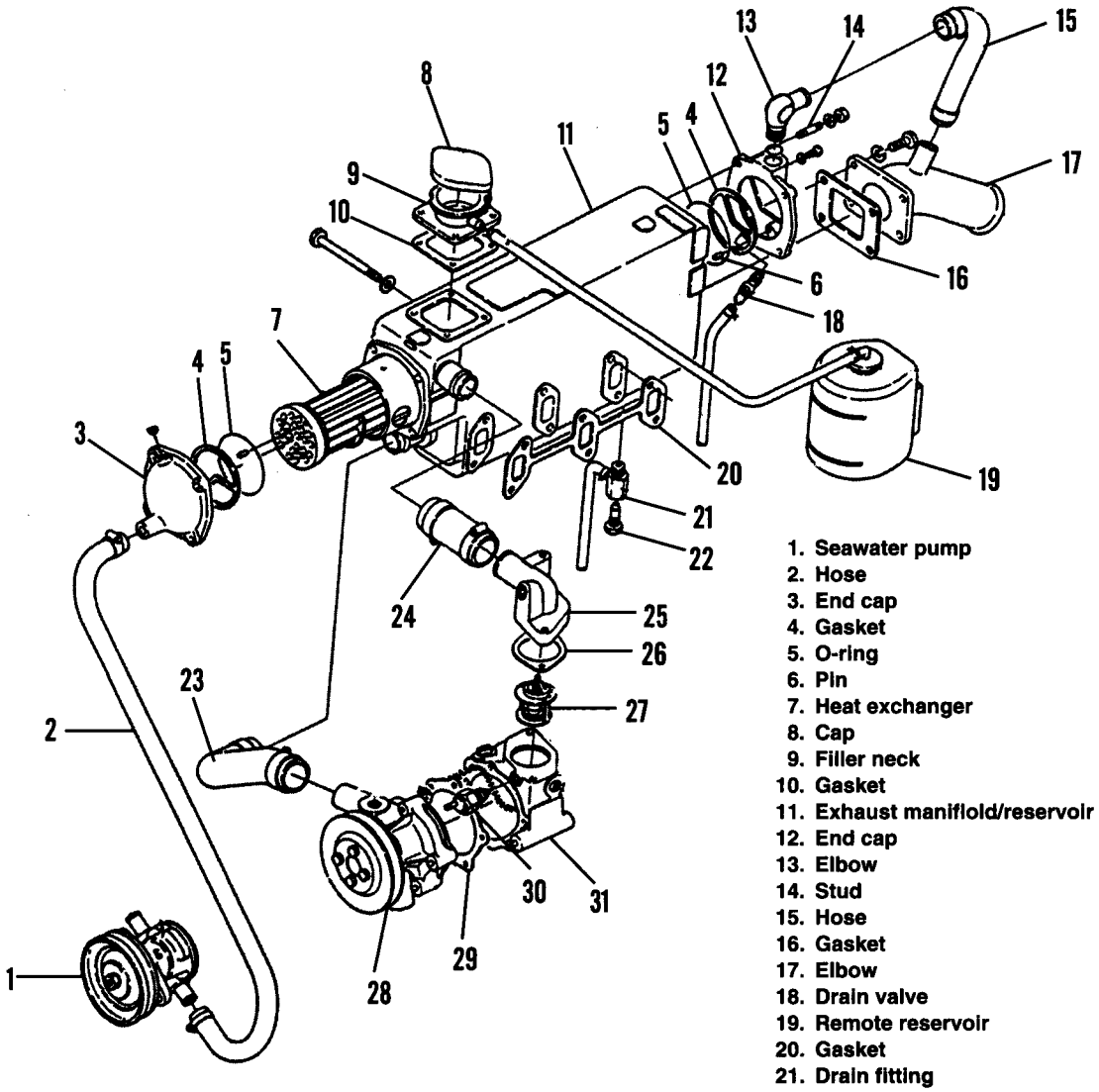

1. Seawater pump
2. Hose
3. End cap
4. Gasket
5. O-ring
6. Pin
7. Heat exchanger
8. Cap
9. Filler neck
10. Gasket
11. Exhaust manifiold/reservoir
12. End cap
13. Elbow
14. Stud
15. Hose
16. Gasket
17. Elbow
18. Drain valve
19. Remote reservoir
20. Gasket
21. Drain fitting
22. Drain valve
23. Hose
24. Hose
25. Elbow
26. Gasket
27. Thermostat
28. Freshwater pump
29. Gasket
30. Coolant termperature sensor
31. Housing

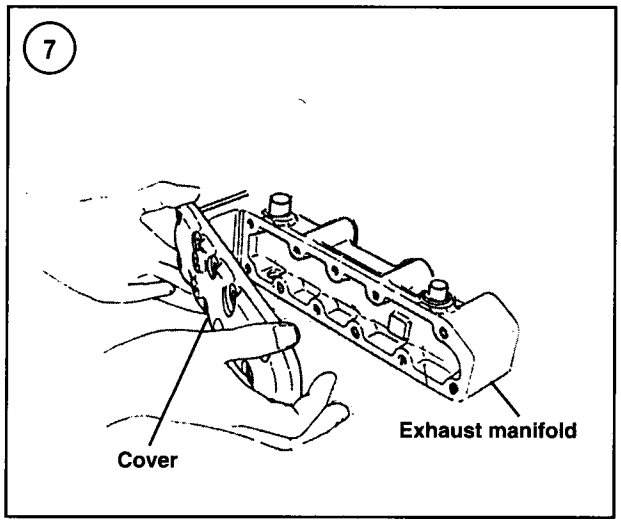

6. Clean any gasket residue from the exhaust manifold and cylinder head.
7. Remove the exhaust manifold cover retaining screws and remove the manifold cover (**Figure 7**).
8. Inspect the exhaust manifold and cover for warpage, carbon buildup and corrosion.
9. Reinstall the exhaust manifold and cover by reversing the removal procedure. Tighten the retaining nuts to the torque specified in **Table 2**.

2GMF, 2GM20F, 3GMF, 3GM30F, 3HMF and 3HM35F models with freshwater (closed) cooling system

Refer to **Figure 6**.
1. Refer to Chapter Four and drain the cooling system.
2. Detach the exhaust hose from the exhaust elbow.
3. Remove the water hose from the exhaust manifold and thermostat housing.
4. Remove the water hose from the exhaust manifold and freshwater pump.
5. Disconnect the water hoses from the manifold end caps.
6. Disconnect the water hose to the overflow tank.
7. Remove the exhaust manifold from the cylinder head.
8. Clean any gasket residue from the exhaust manifold and cylinder head.
9. Check the exhaust manifold for warpage, carbon buildup and corrosion.
10. If necessary, refer to Chapter Eight to service the heat exhanger inside the exhaust manifold.
11. Reverse the removal procedure to install the exhaust manifold. Tighten the manifold bolts to the torque specified in **Table 2**. Fill the freshwater section of the closed cooling system with coolant as described in Chapter Three.

CYLINDER HEAD

Removal

In some instances, the cylinder head may be removed for service without removing the engine. If engine removal is necessary, refer to the engine removal procedure. Refer to **Figure 8** for an exploded view of the cylinder head assembly.

To remove the cylinder head, proceed as follows:
1. Disconnect the negative battery cable from the negative battery terminal.
2. If not previously performed, drain the cooling system as described in Chapter Four.
3. Remove the alternator as described in Chapter Eight.
4. Remove the exhaust manifold as previously described.
5. Disconnect the wire lead from the water temperature sender (**Figure 9**).
6A. *Engines with standard cooling*—Disconnect the lower water hose (**Figure 9**) from the thermostat housing.
6B. *Engines with freshwater (closed) cooling system*—Remove the freshwater pump as described in Chapter Eight.
7. Remove the air cleaner and the air cleaner base.
8. Remove the fuel injector and precombustion chamber as described in Chapter Seven.
9. Remove the valve cover as previously described.
10. Remove the nuts that retain the rocker arm stands (**Figure 10**), then remove the rocker shaft assembly.
11. Remove the push rods and mark them so they can be reinstalled in their original positions.
12. Detach the oil line fitting from the cylinder head.
13. Unscrew the smaller cylinder head retaining bolts first, then unscrew the larger bolts and nuts in a crossing pattern.
14. Remove the cylinder head and head gasket.

Inspection

1. Refer to the *Anticorrosion Maintenance* section in Chapter Three. Remove and inspect the sacrificial anode. Install the anode in the cylinder head after completing cylinder head service.
2. If service to the valves or rocker assembly is required, refer to the *Valves* and *Rocker Assembly* sections.
3. Check the cylinder head for signs of oil or water leakage before cleaning. Look for corrosion or foreign material in the oil and water passages.

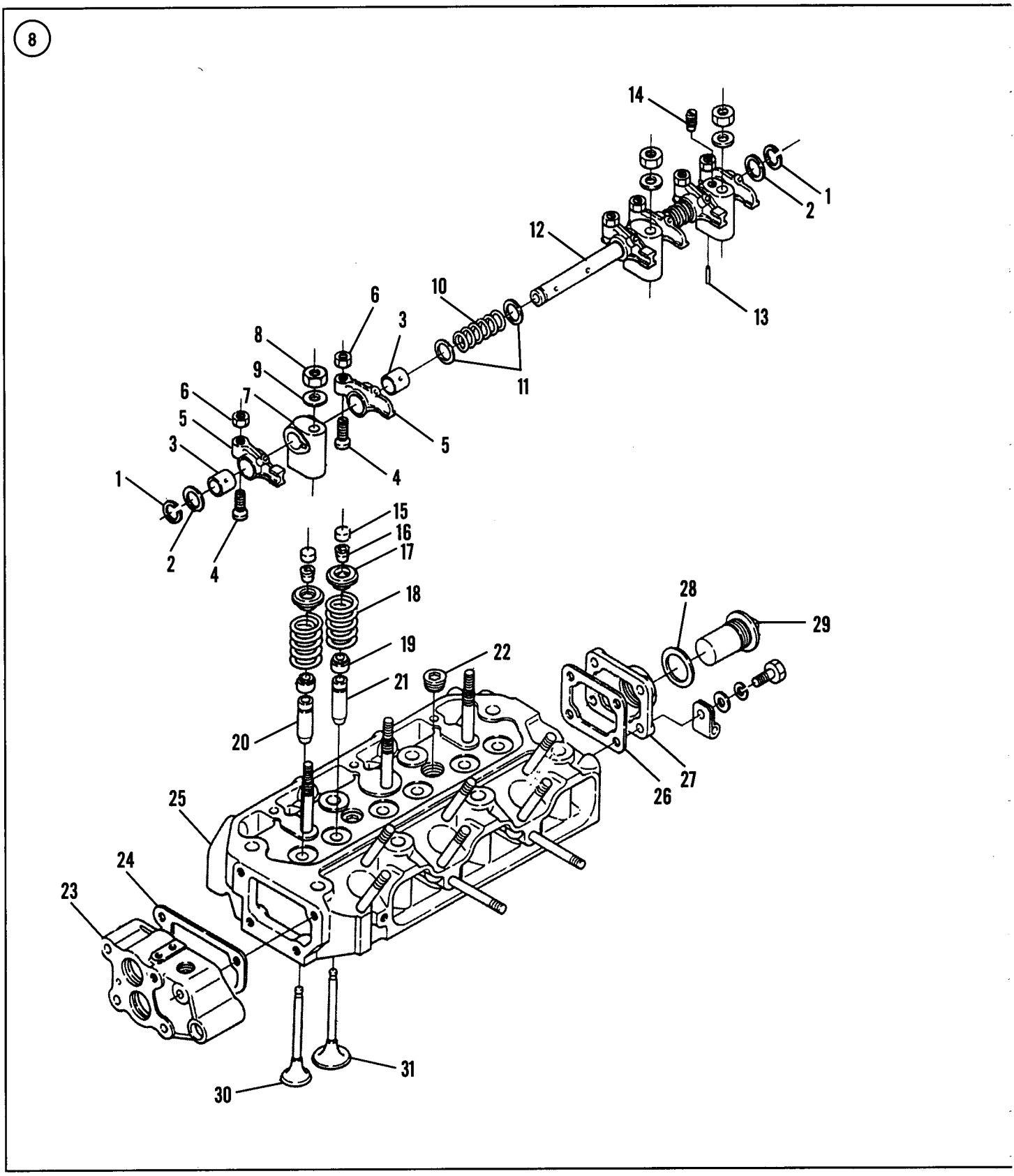
8
14
1
2
12
13
10
6
3
8
9
11
6
7
5
5
3
4
1
2
4
15
16
17
18
28
29
19
22
21
20
27
26
25
24
23
31
30

CYLINDER HEAD

1. Snap ring
2. Washer
3. Bushing
4. Adjuster
5. Rocker arm
6. Nut
7. Rocker shaft stand
8. Nut
9. Washer
10. Spring
11. Washer
12. Rocker arm shaft
13. Pin
14. Locating screw
15. Wear cap
16. Keys
17. Valve spring retainer
18. Vavle spring
19. Valve seal
20. Exhaust valve guide
21. Intake valve guide
22. Plug
23. Thermostat housing
24. Gasket
25. Cylinder head
26. Gasket
27. End cap
28. Washer
29. Sacrificial anode
30. Exhaust valve
31. Intake valve

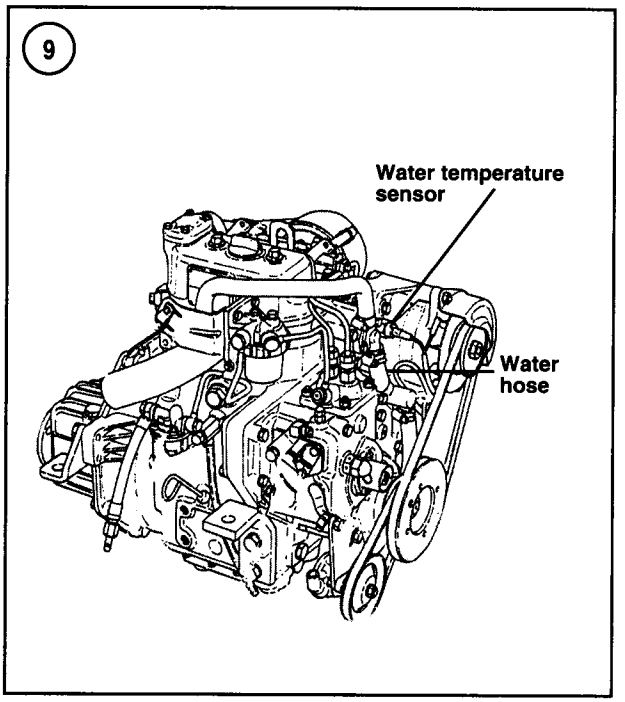

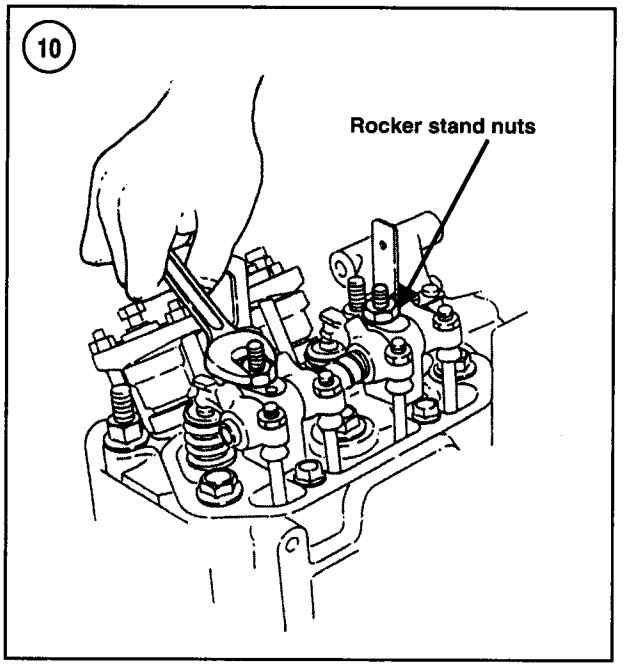

4. Without removing the valves, remove all deposits from the combustion chamber. Use a fine wire brush dipped in solvent or make a scraper from hardwood. Be careful not to scratch or gouge the combustion chamber.

5. After all carbon is removed from the combustion chamber and ports, clean the entire head in solvent. While

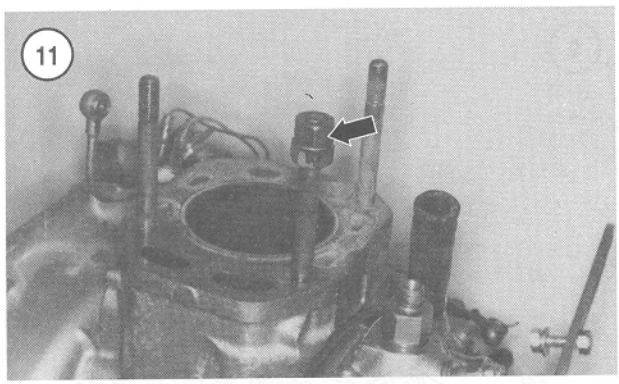

cleaning, look for cracks or other visible signs of damage. Clean the passages with a stiff spiral brush, then blow them out with compressed air.

NOTE
If deposits are found in the intake or exhaust ports, remove the valves and clean the ports.

6. Clean away all carbon on the piston top.
7. Check the cylinder head studs for damage and replace them if necessary. If a stud is loose, tighten it using the following procedure:
   a. Install two nuts on the stud as shown in **Figure 11**, typical.
   b. Rotate the nuts so they contact each other, then hold one nut and tighten the other nut against the first nut.
   c. Tighten the stud in the cylinder block by turning the top nut until reaching a torque of 60 N•m (44 ft.-lb.).
   d. Hold the bottom nut, loosen the top nut, and remove both nuts.
8. Check the threaded rocker arm support stud for damaged threads. Replace if necessary.
9. Check for warpage of the cylinder head-to-block gasket surface with a straightedge and feeler gauge (**Figure 12**). Measure diagonally, as well as end to end. If the gap exceeds 0.07 mm (0.003 in.), have the head resurfaced by a machine shop.

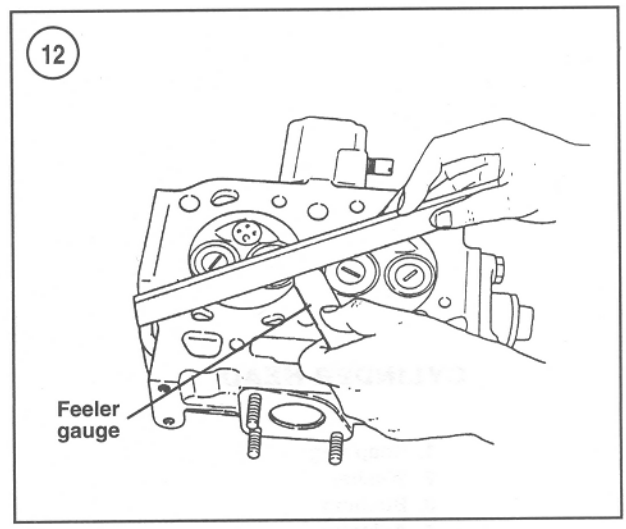

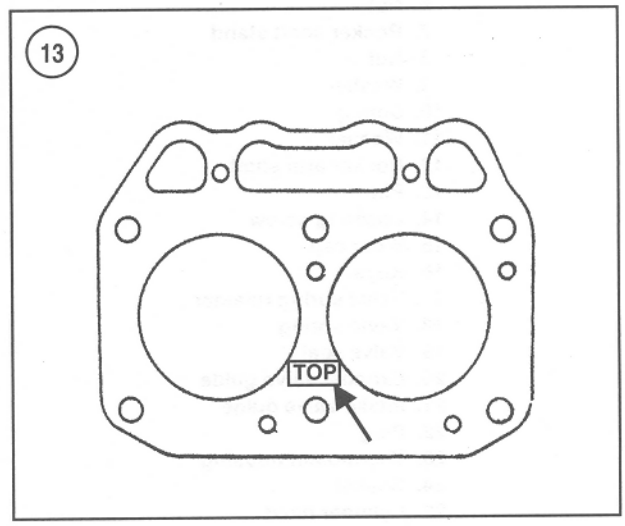

Installation

1. Make sure the cylinder head and block gasket surfaces are clean.
2. Recheck all visible oil and water passages for cleanliness.
3. Apply Three Bond 50 gasket sealer to both sides of a new cylinder head gasket.
4. Place the new head gasket over the cylinder head studs on the block. Be sure the TOP mark (**Figure 13**) on the gasket is up.
5. Carefully lower the head onto the cylinder block.
6. Apply engine oil to the threads on the cylinder head studs.
7. Install and tighten the cylinder head retaining nuts finger-tight.
8. Tighten the nuts and bolts following the sequence shown in **Figure 14** to the torque specified in **Table 4.** Tighten the nuts and bolts in three equal steps until reaching the final torque setting.
9. If removed, install the sacrificial anode into the cylinder head.
10. Attach the oil line fitting to the cylinder head.
11. Install the push rods in their original position.

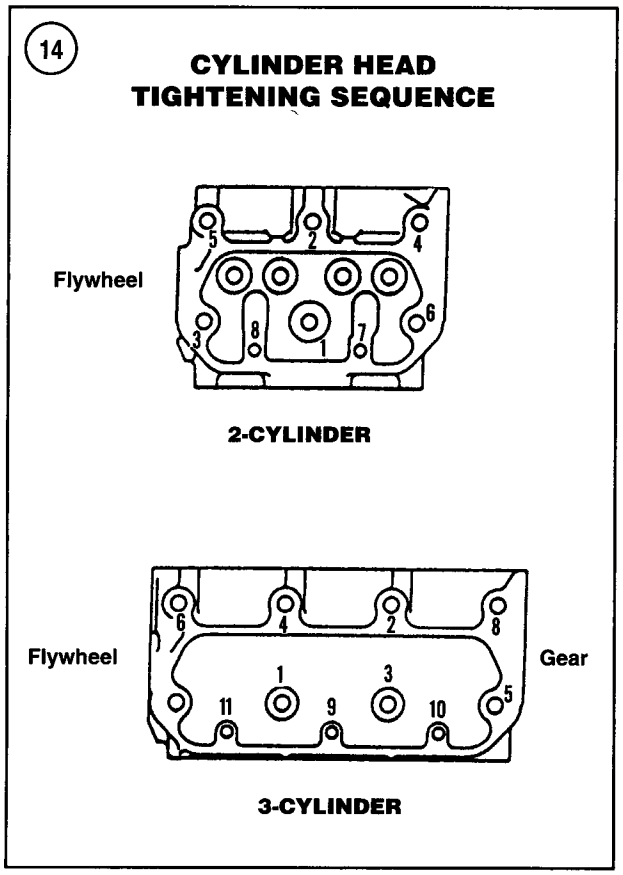

12. Install the rocker assembly and the rocker arm stand retaining nuts (**Figure 10**). Tighten the nuts to 37 N•m (27 ft.-lb.).

13. Install the fuel injector and precombustion chamber as described in Chapter Seven.

14. Install the exhaust manifold.

15. Install the air cleaner base and the air cleaner.

16. Connect the wire lead to the water temperature sender (**Figure 9**).

17A. Engines with standard cooling—Connect the lower water hose (**Figure 9**).

17B. Engines with freshwater (closed) cooling system—Install the freshwater pump as described in Chapter Eight.

18. Install the alternator.

19. If the engine is installed in the boat, proceed as follows:

a. Attach the exhaust hose to the exhaust elbow.

b. On engines equipped with a closed cooling system, fill the cooling system as described in Chapter Four.

c. Connect the negative battery cable to the negative battery terminal.

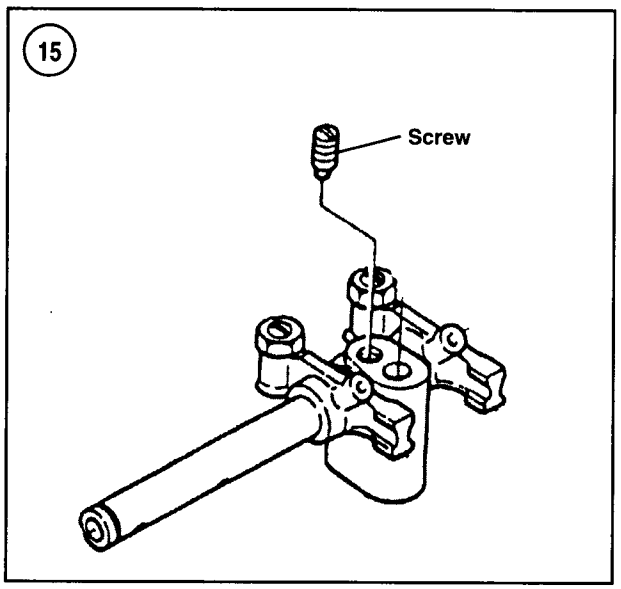

20. Adjust the valve clearance as described in Chapter Three.

21. Reinstall the valve cover.

ROCKER SHAFT ASSEMBLY

Each valve is actuated by a rocker arm that rides on a shaft (**Figure 8**). Each rocker arm is equipped with a bushing in the rocker arm bore. A snap ring at each end of the rocker arm shaft retains the rocker arms on the rocker shafts.

1. Remove the valve cover as previously described.

2. Remove the rocker arm stand retaining nuts (**Figure 10**), then remove the rocker shaft assembly.

NOTE

The rocker arms on 2GM and 2GM20 engines are identical, but rocker arms on 3GM, 3GM30, 3HM and 3HM35 engines are designed for use with the intake or exhaust valves.

3. Remove the snap rings at both ends of the rocker shaft and remove the rocker shaft components.

4. If necessary, unscrew the locating screw in the end support stand (**Figure 15**) and separate the rocker shaft from the stand.

5. Inspect each rocker arm. The pad on the rocker arm that contacts the valve stem must be smooth. Replace the rocker arm if the pad is damaged or excessively worn. Check the adjusting screw push rod seat for galling. Replace the adjusting screw if it is damaged or excessively worn.

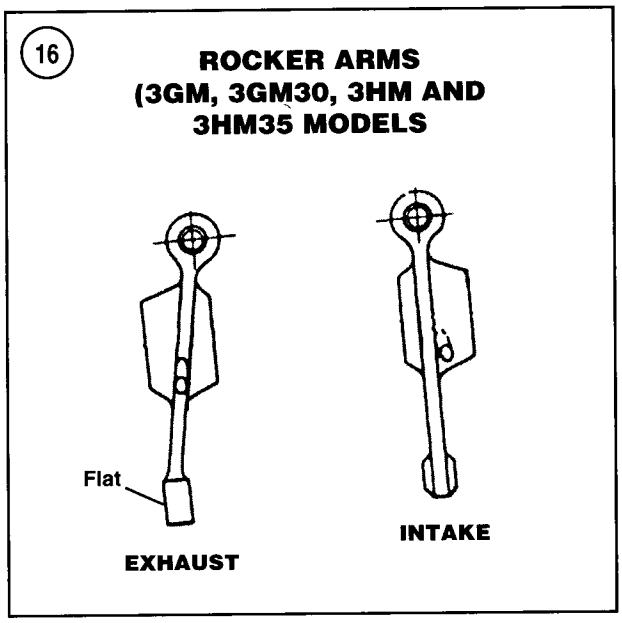

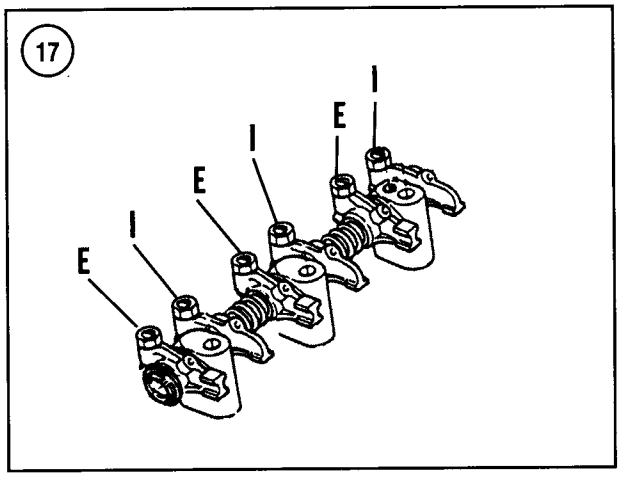

6. Inspect and measure the inside diameter of the rocker arm bushing and the outside diameter of the rocker arm shaft. Replace the rocker arm or rocker arm shaft if the measurements exceed the specifications listed in **Tables 1-3**.

NOTE
The rocker arm and bushing are available only as a unit.

7. Reassemble and reinstall the rocker arm assembly by reversing the removal procedure. On 3GM, 3GM30, 3HM and 3HM35 engines, identify the intake and exhaust valves as shown in **Figure 16**, then position them on the shaft in the order shown in **Figure 17**.

8. Adjust the valve clearance as described in Chapter Three.

VALVES AND VALVE SEATS

Servicing the valves, guides and valve seats must be done by a dealer or machine shop, as special knowledge and expensive machine tools are required.

A general practice among those who do their own service is to remove the cylinder head, perform all disassembly except valve removal and take the head to a dealer or machine shop for inspection and service. Since the cost is low relative to the required effort and equipment, this is usually the best approach, even for experienced mechanics. The following procedures are provided to acquaint the home mechanic with the procedure.

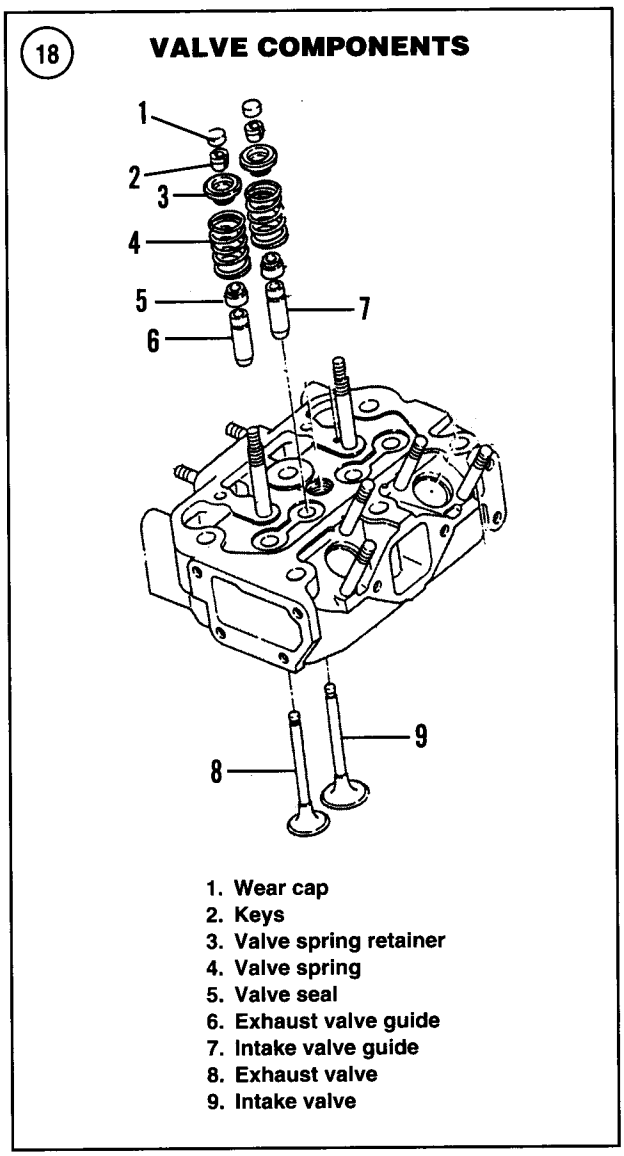

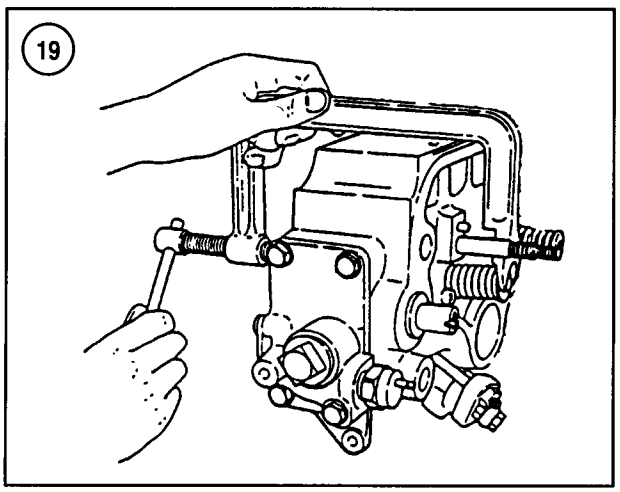

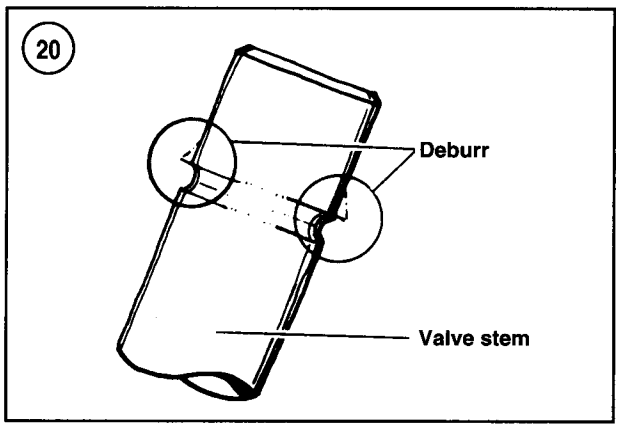

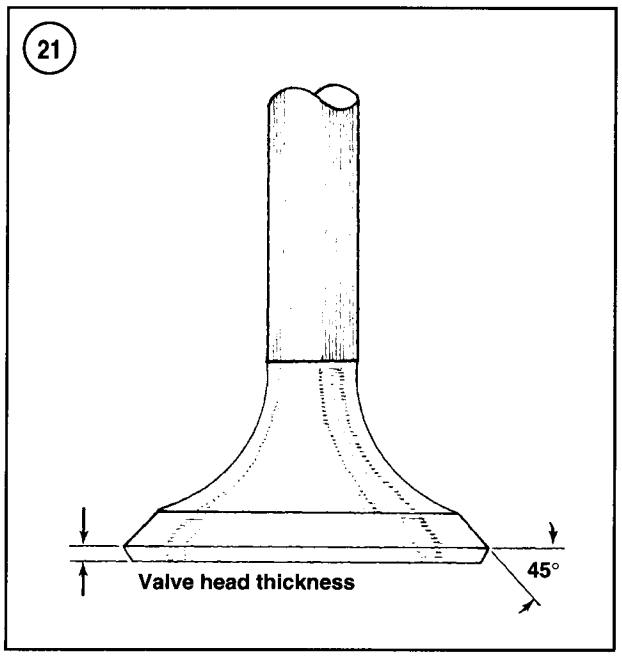

Valve Removal

Refer to **Figure 18** for this procedure.

1. Remove the cylinder head as described in this chapter.
2. Remove the rocker shaft assembly as described in this chapter.
3. Remove the wear cap (1, **Figure 18**) on the valve stem.
4. Compress the valve spring with a compressor like the one shown in **Figure 19**.
5. Remove the valve keys (2, **Figure 18**) and release the spring tension.
6. Remove the valve spring retainer and valve spring.

CAUTION

*Remove any burrs from the valve stem lock grooves (**Figure 20**) before removing the valve to prevent damage to the valve guide.*

7. Remove the valve.
8. Remove and discard the valve stem seal (5, **Figure 18**).
9. Repeat Steps 3-8 for the remaining valves.

Inspection

1. Clean the valves with a fine wire brush or buffing wheel. Discard any cracked, warped or burned valves.
2. Measure the valve stems at the top, center and bottom for wear. A machine shop can do this when the valves are ground.

NOTE

*Check the thickness of the valve edge or margin after the valves have been ground. See **Figure 21**. Any valve with a margin less than 0.75 mm (0.030 in.) should be discarded.*

3. Remove all carbon and varnish from the valve guides with a stiff spiral wire brush.

NOTE

The next step assumes that all valve stems have been measured and are within specifications. Replace valves with worn stems before performing this step.

4. Insert each valve into the guide from which it was removed. Holding the valve just slightly off its seat, rock it back and forth in a direction parallel with the rocker arms. This is the direction in which the greatest wear normally occurs. If the valve stem rocks more than slightly, the valve guide is probably worn.
5. If there is any doubt about valve guide condition after performing Step 4, measure the valve guide. Compare the

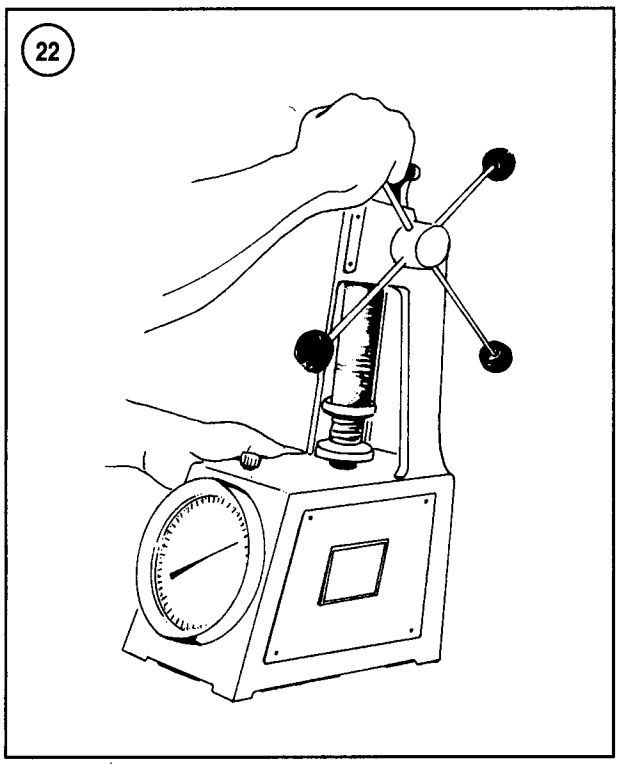

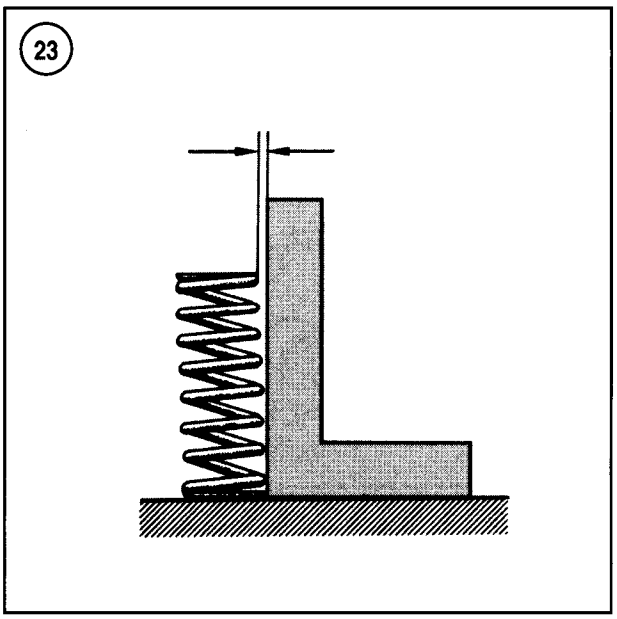

results with specifications in **Tables 1-3**. Worn guides must be replaced.

6. Test the valve springs under load on a spring tester (**Figure 22**). Replace any spring that does not meet the specification listed in **Tables 1-3**.

7. Inspect the valve seats. If worn or burned, they must be reconditioned.This is a job for a dealer or machine shop, although the procedure is described in this chapter.

8. Check each spring on a flat surface with a steel square. See **Figure 23**. Slowly revolve the spring 360° and note the space between the top of the coil and the square. If it exceeds 1.4 mm (0.055 in.) at any point, replace the spring.

9. Check the valve guides for wear and looseness. Refer to **Tables 1-3** for valve guide specifications. A loose valve guide must be replaced.

Valve Guide Replacement

The cylinder head is equipped with replaceable valve guides. The intake and exhaust valve guides are different in shape. Refer to **Figure 24**. The intake valve guide has a straight inside bore, while the exhaust valve guide has a stepped opening at the lower end of the guide.

Take the cylinder head to a dealership or machine shop if valve guide replacement is required.

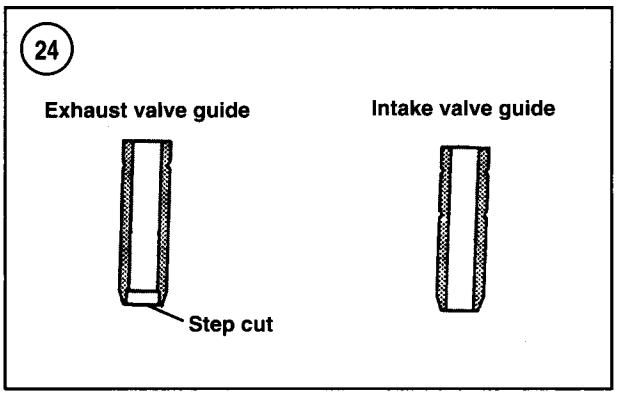

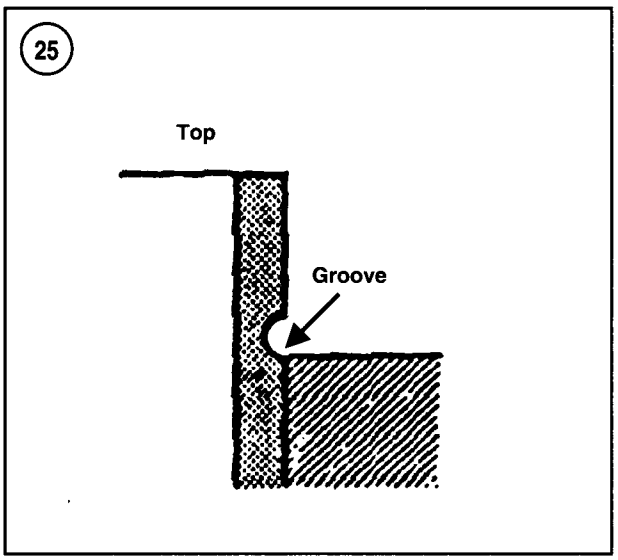

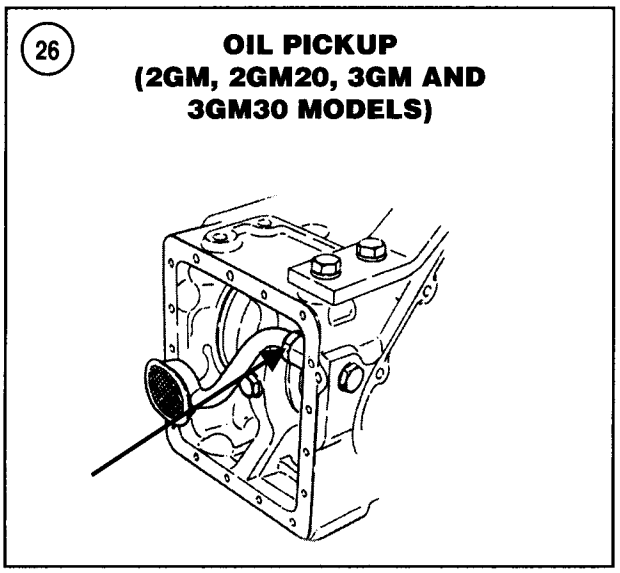

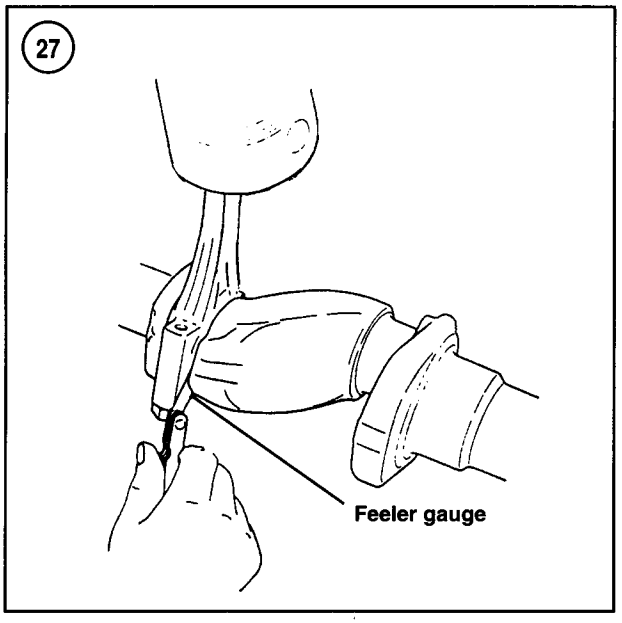

When installing the valve guides, the grooved end must be toward the top of the cylinder head. The groove must be flush with the head surface as shown in **Figure 25**.

PUSH RODS

1. Remove the rocker arms as previously described.
2. Remove the push rods and mark them so they can be reinstalled in their original positions.
3. Inspect the push rod ends for damage. Maximum allowable runout is 0.03 mm (0.0012 in.).

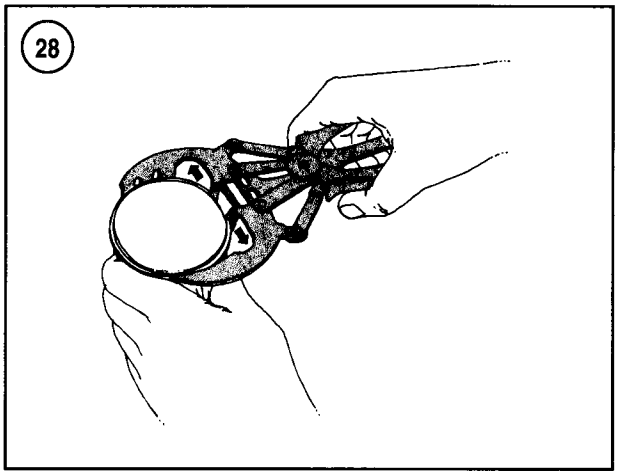

4. Reinstall the push rods by reversing the removal procedure. Adjust valve clearance as described in Chapter Three.

PISTON/CONNECTING ROD ASSEMBLY

Piston/Connecting Rod Removal

1. Remove the engine as described in this chapter.
2. Place a suitable container under the oil pan and remove the drain plug. Let the crankcase oil drain, then reinstall the drain plug.
3. Remove the cylinder head as described in this chapter.
4. Remove the oil pan.
5. *On 2GM, 2GM20, 3GM and 3GM30 models*—Loosen the oil pickup jam nut (**Figure 26**) and remove the oil pickup.
6. Rotate the crankshaft until the piston is at bottom dead center. Pack the cylinder bore with clean shop rags. Remove the carbon ridge at the top of the cylinder bore with a ridge reamer. These can be rented for use. Vacuum out the shavings, then remove the shop rags.
7. Rotate the crankshaft until the connecting rod is centered in the bore. Measure the clearance between the connecting rod and the crankshaft journal flange with a flat feeler gauge (**Figure 27**). If the clearance exceeds specifications (**Tables 1-3**), replace the connecting rod during reassembly.
8. Remove the connecting rod bolts. Lift off the cap, together with the lower bearing insert.
9. Use a wooden hammer handle to push the piston and connecting rod from the bore.
10. Remove the piston rings with a ring remover (**Figure 28**).

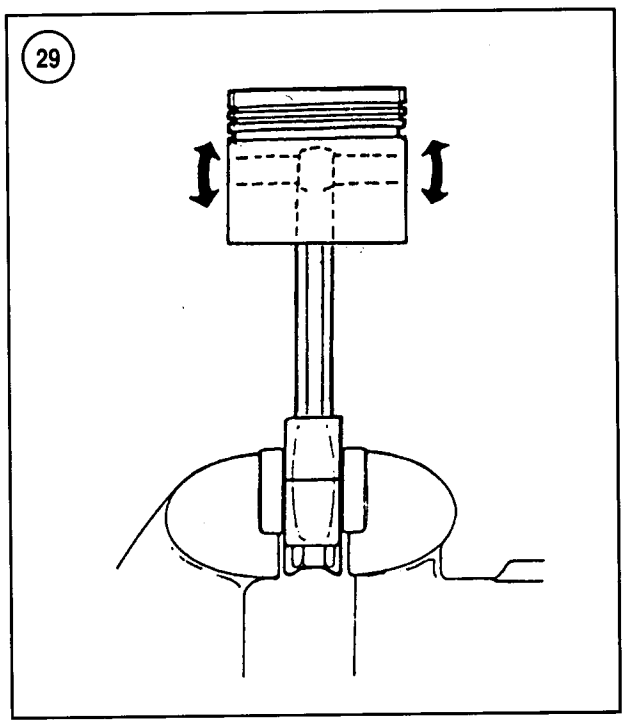

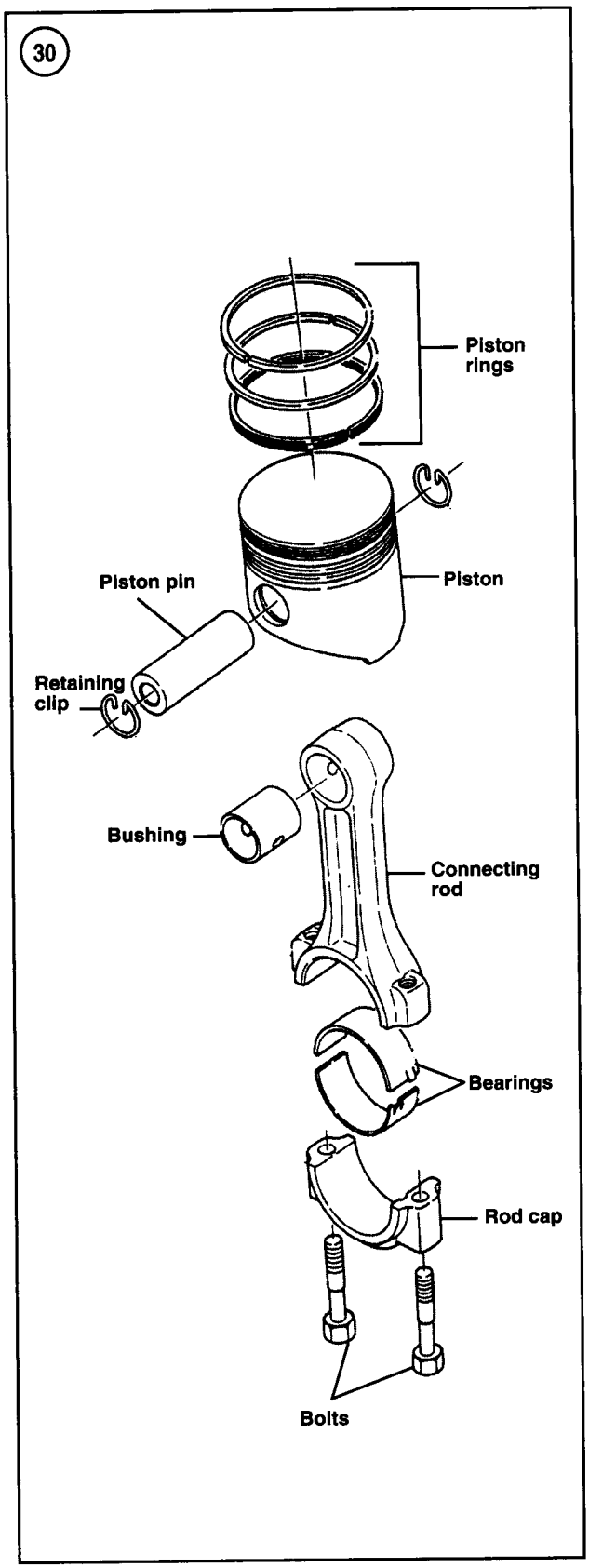

Piston Pin Removal/Installation

The steel piston pin rides directly in the piston and in a bushing in the connecting rod. Circlips at each end retain the piston pin in the piston.

1. Before removing the piston, place the crankshaft end of the connecting rod in a vise with soft jaws. Rock the piston as shown in **Figure 29**. Any rocking motion (do not confuse with the normal sliding motion) indicates wear on the piston pin, piston pin bore or connecting rod small end bore (or combination of these).
2. Remove the clip from each side of the piston pin bore (**Figure 30**) with a small screwdriver or scribe. Hold a thumb over one edge of the clip when removing it to prevent the clip from springing out.
3. Use a wooden dowel or suitable tool and push out the piston pin. If the pin is difficult to remove, heat the piston with a hair dryer. Separate the piston from the connecting rod.

Piston/Cylinder Bore Check

Unless precision measuring equipment is available, have this procedure done by a machine shop.

1. Measure the piston diameter with a micrometer (**Figure 31**) at a right angle to the piston pin bore 9 mm (0.35 in.) from the bottom of the piston skirt.

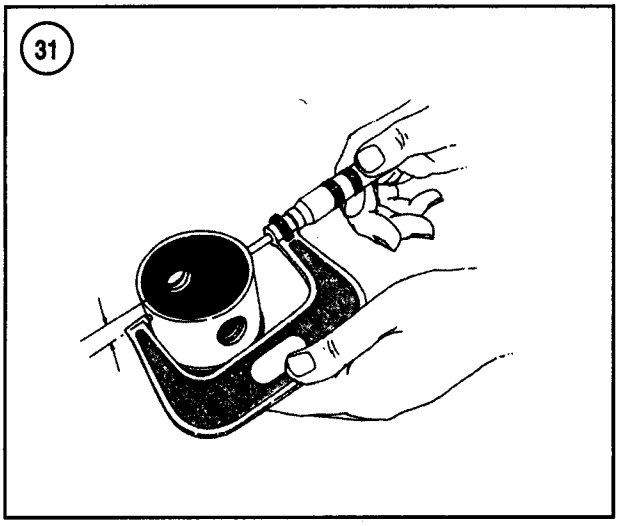

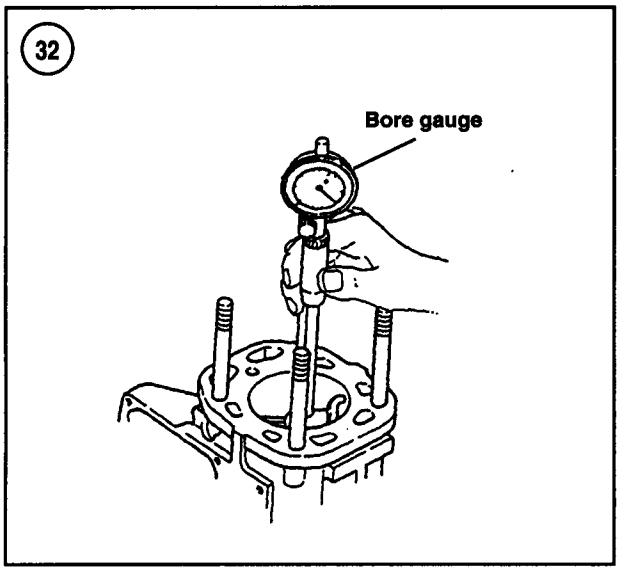

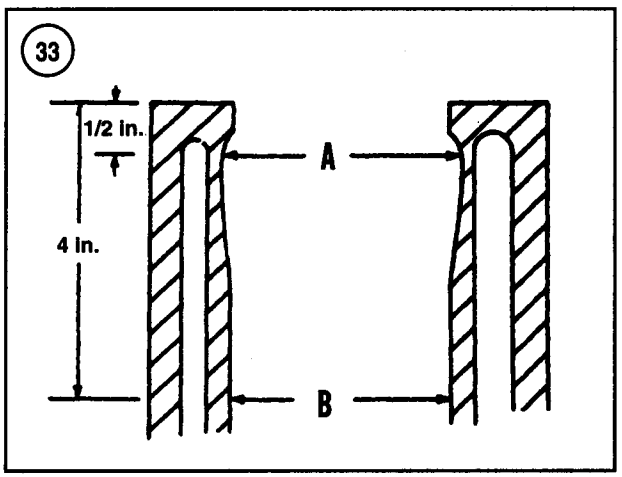

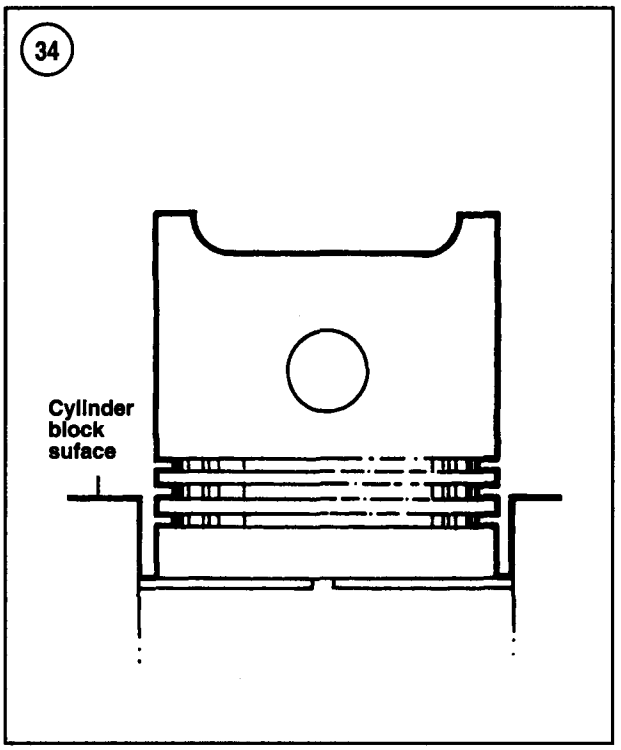

2. Measure the cylinder bore diameter at several points with a bore gauge (**Figure 32**, typical). **Figure 33** shows the points of normal cylinder wear. If dimension A exceeds dimension B by more than 0.02 mm (0.0008 in.), rebore the cylinder and install a new piston/ring assembly.

3. If the cylinder bore is damaged or excessively worn, rebore the cylinder bore and install a new piston. If the piston is worn, but the cylinder bore is good, install a new piston.

NOTE

Obtain the new piston and have it available so the machine shop can bore the cylinder to the correct oversize dimension.

Piston Ring Fit/Installation

1. Check the ring gap of each piston ring. To do this, position the ring at the bottom of the ring travel area and square it by tapping gently with an inverted piston. See **Figure 34**.

NOTE

If the cylinder has not been rebored, check the gap at the bottom of the ring travel, where the cylinder is least worn.

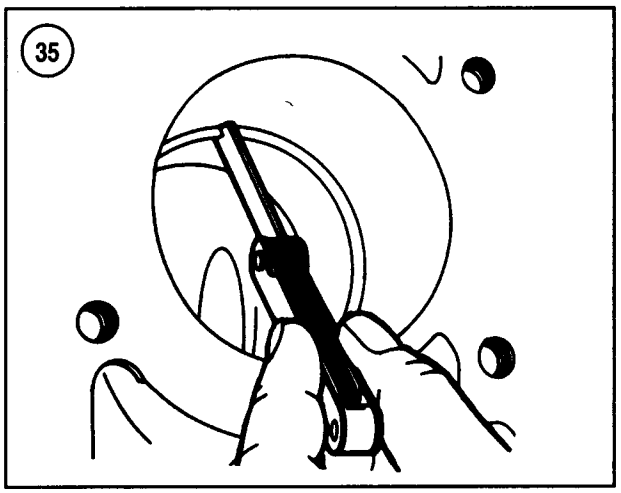

2. Measure the ring gap with a feeler gauge as shown in **Figure 35**. Compare the measurement with specifications in **Tables 1-3**. If the measurement is not within specification, the rings must be replaced as a set. Check the gap of new rings as well. If the gap is too small, file the ends of the ring to correct it (**Figure 36**).

3. Check the side clearance of the rings as shown in **Figure 37**. Place the feeler gauge alongside the ring all the way into the groove. If the measurement is not within specifications (**Tables 1-3**), either the rings or the ring grooves are worn. Inspect and replace them as required.

4. Using a ring expander tool (**Figure 38**), carefully install the oil control ring, then the compression rings. The oil ring consists of two pieces, the outer ring and the inner expansion spring. Assemble the oil ring on the piston so the expansion spring gap is on the opposite side of the piston from the ring end gap. See **Figure 39**. The second compression ring is tapered while the top compression ring has a barrel face. The top of each compression ring is marked and must face toward the piston crown.

Connecting Rod Inspection

Have the connecting rod checked for straightness by a dealer or machine shop.

The piston pin end of the connecting rod is equipped with a bushing. Refer to **Tables 1-3** for bushing specifications. If bushing replacement is required, a press is necessary to remove the old bushing and install a new bushing. The oil holes in the bushing and connecting rod must align. Ream the bushing to obtain the desired clearance in **Tables 1-3**.

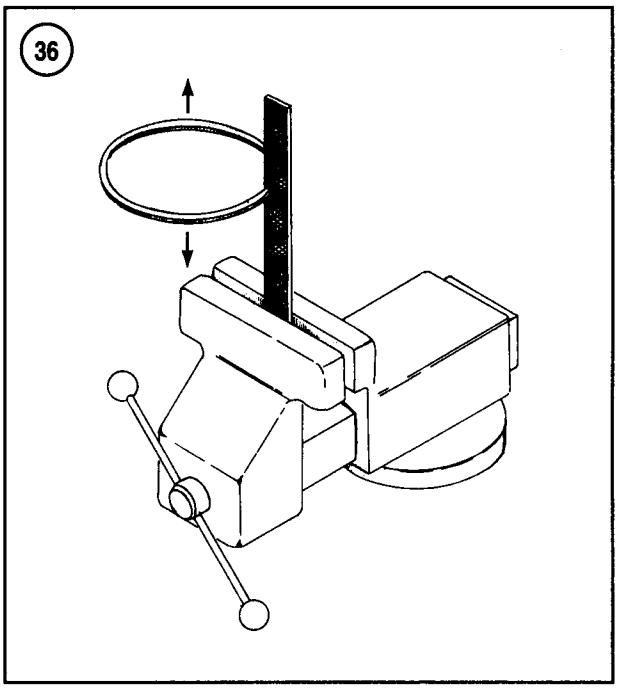

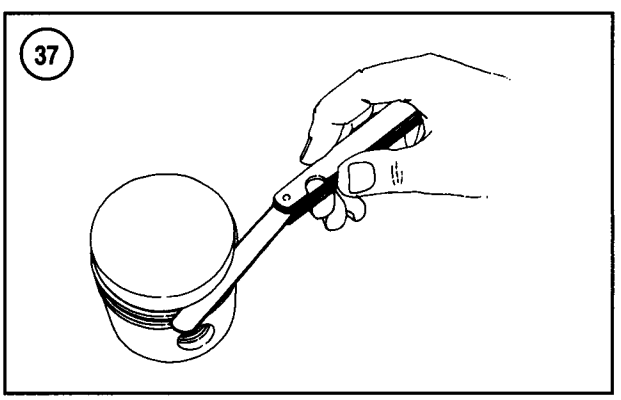

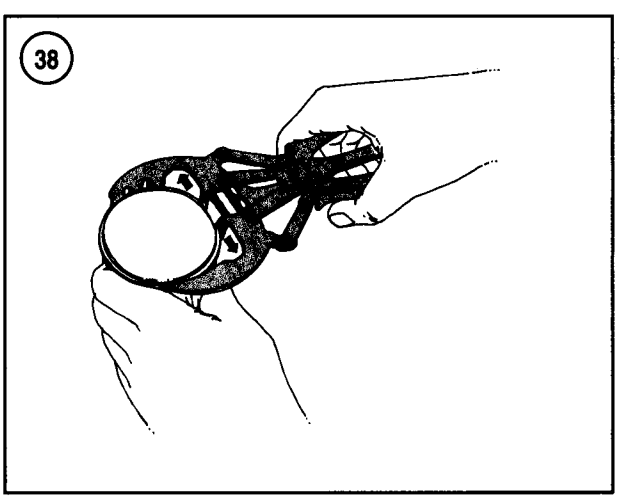

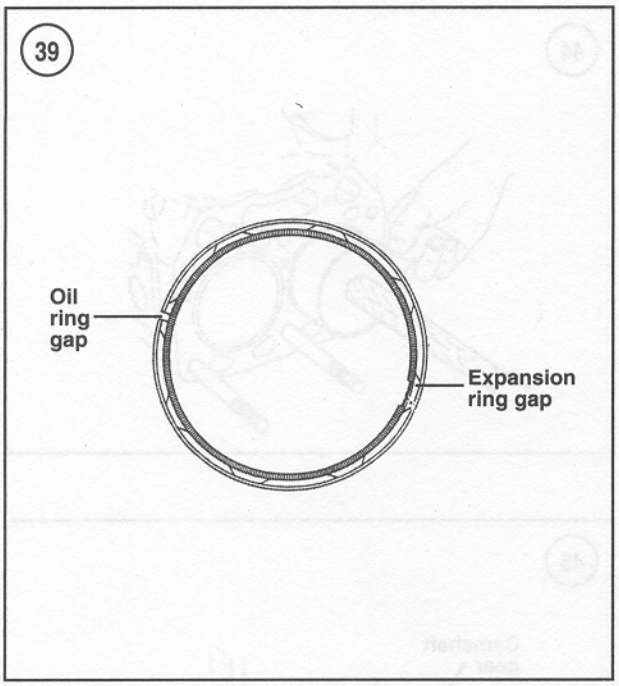

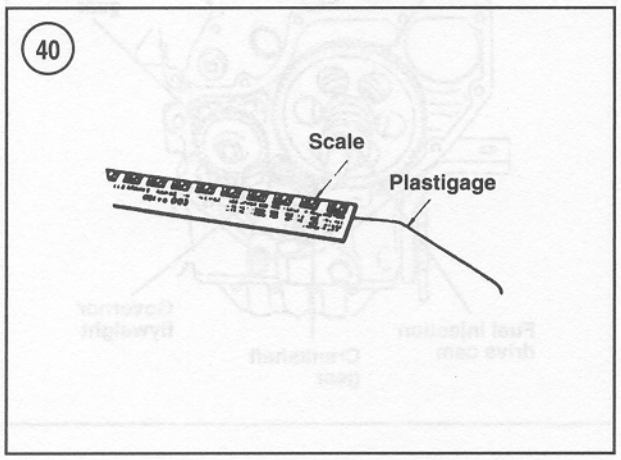

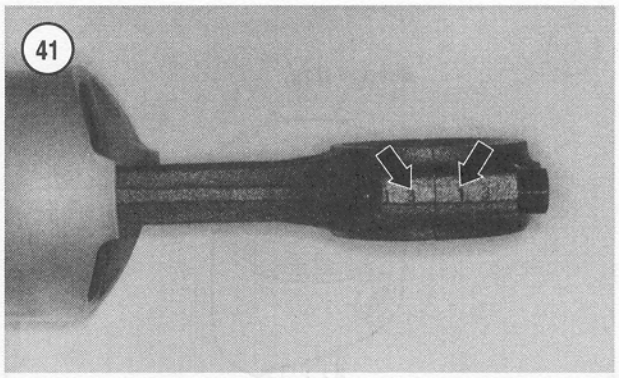

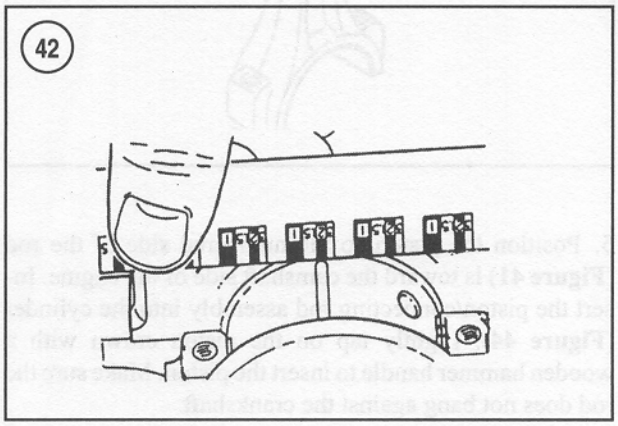

Connecting Rod Bearing Clearance Measurement

1. Place the connecting rod and upper bearing half on the connecting rod journal.

2. Cut a piece of Plastigage the width of the bearing (**Figure 40**). Place the Plastigage on the journal, then install the rod cap and bearing. Be sure to install the cap so the marks on the cap and rod are on the same side (**Figure 41**).

NOTE

Do not place Plastigage over the journal oil hole.

3. Tighten the connecting rod cap to specification (**Table 4**). Do not rotate the crankshaft while the Plastigage is in place.

4. Remove the connecting rod cap. To determine bearing clearance, compare the width of the flattened Plastigage to the markings on the envelope (**Figure 42**). If the clearance is excessive, have the crankshaft reground and install undersize bearings.

Piston/Connecting Rod Installation

1. Rotate the crankshaft so the crankpin is at bottom dead center.

2. Make sure the ring gaps are positioned as shown in **Figure 43**.

3. Immerse the entire piston in clean engine oil. Coat the cylinder wall with oil.

4. Install a piston ring compressor on the piston around the piston rings.

CAUTION

Use extreme care in Step 5 to prevent the connecting rod from nicking the crankshaft journal.

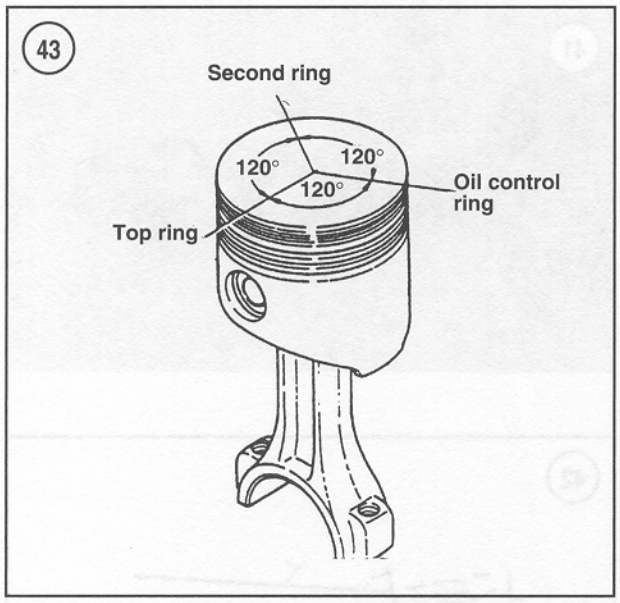

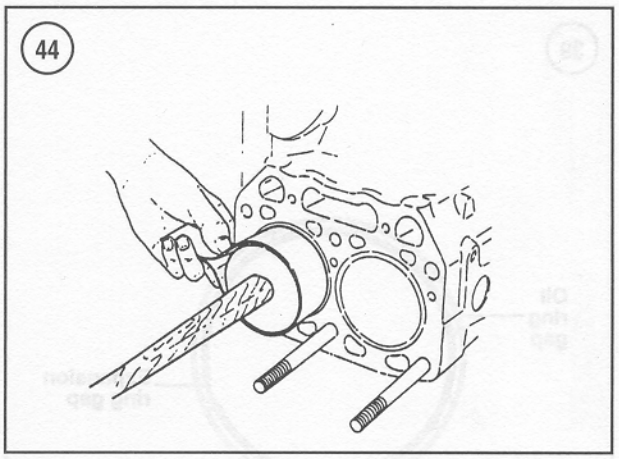

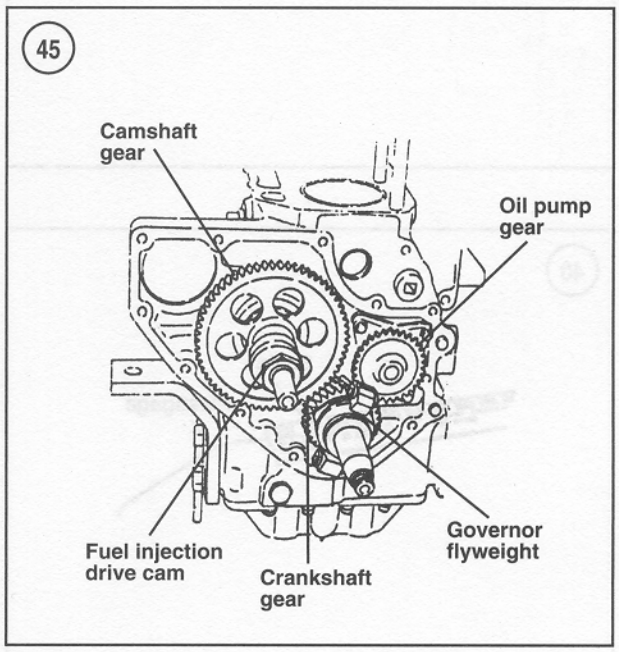

5. Position the piston so the numbered side of the rod (**Figure 41**) is toward the camshaft side of the engine. Insert the piston/connecting rod assembly into the cylinder (**Figure 44**). Lightly tap on the piston crown with a wooden hammer handle to insert the piston. Make sure the rod does not bang against the crankshaft.

6. Clean the connecting rod bearings carefully, including the back sides. Coat the crankpin journal and bearings with clean engine oil. Place the bearings in the connecting rod and cap.

7. Pull the connecting rod and bearing into position against the crankpin. Lightly lubricate the connecting rod bolt threads with engine oil.

8. Install the connecting rod cap. Make sure the rod and cap are properly aligned. Install the cap bolts finger-tight.

9. Tighten the cap retaining bolts to specification (**Table 4**).

10. Check the connecting rod side clearance as described under *Piston/Connecting Rod Removal* in this chapter.

TIMING GEARCASE

The timing gearcase covers the camshaft and crankshaft gears and the oil pump (**Figure 45**). The timing gearcase also contains the governor mechanism and serves as the mounting location for the fuel injection pump. A ball bearing in the timing gearcase supports the outer end of the crankshaft.

To remove and reinstall the timing gearcase, proceed as follows:

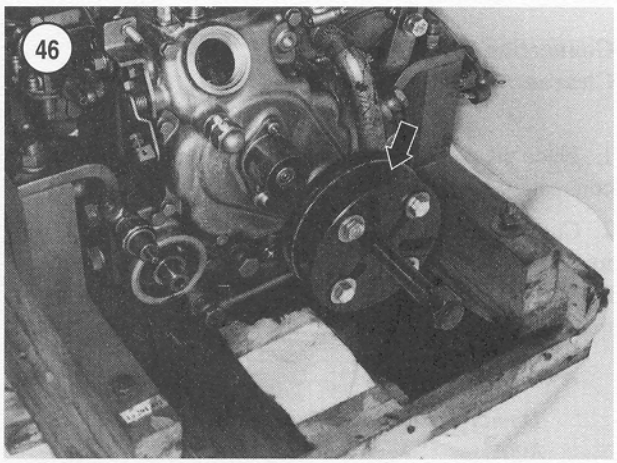

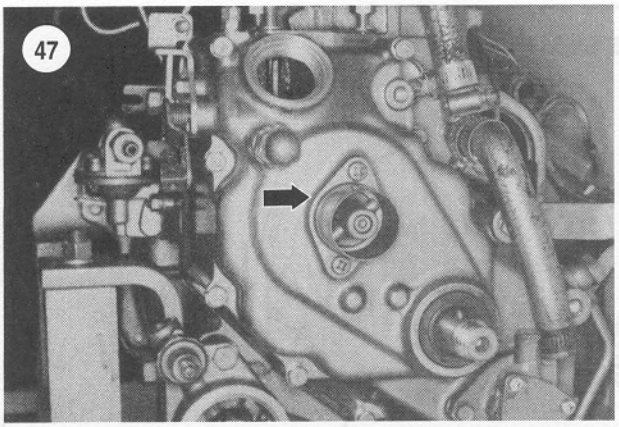

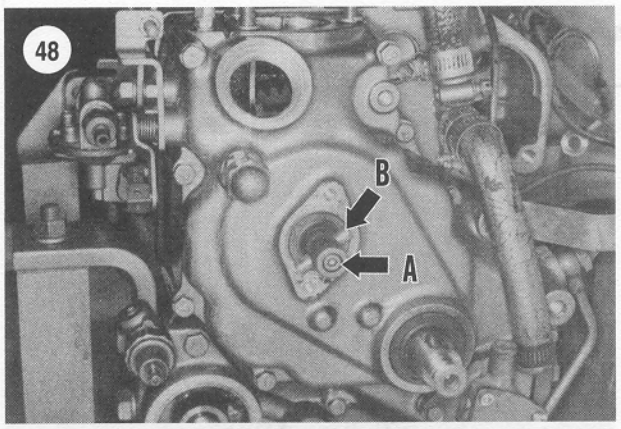

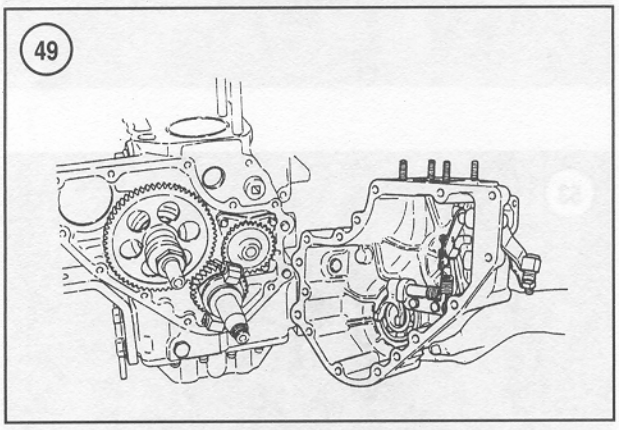

1. Disconnect the negative battery cable from the negative battery terminal.

2. Remove the alternator as described in Chapter Nine.

3. Remove the oil filter.

4. Detach the control cables from the speed control lever and the stop lever.

5. Remove the fuel injection pump as described in Chapter Seven.

6. Remove the seawater pump as described in Chapter Eight.

7. Remove the crankshaft pulley retaining nut. Using a suitable puller, remove the crankshaft pulley (**Figure 46**, typical). Remove the drive key from the crankshaft.

8. Remove the manual starter cover (**Figure 47**, typical).

9. Remove the setscrew in the end of the camshaft (A, **Figure 48**, typical), then remove the manual starter drive pin (B).

10. Remove the timing gearcase (**Figure 49**).

11. Remove the gasket and any residue from the gearcase and crankcase surfaces.

12. If crankshaft or starter seal replacement is necessary, proceed as follows:

a. Pry the old seal from the gearcase with a large screwdriver. Work carefully to prevent damage to the gearcase seal surface.

b. Clean the seal recess in the cover with solvent and blow it dry with compressed air.

c. Apply gasket sealer to the periphery of the seal.

d. Position a new seal in the cover recess with its open end facing the inside of the gearcase. Drive the seal into place with a suitably sized seal driver or socket.

13. If crankshaft bearing replacement is necessary, proceed as follows:

a. Refer to Chapter Seven and remove governor shaft from timing gearcase.

b. Pry the seal from the gearcase with a large screwdriver. Work carefully to prevent damage to the gearcase seal surface.

c. Drive or press out the bearing. Force the bearing toward the inside of the gearcase.

d. Clean the seal and bearing recesses in the cover with solvent and blow them dry with compressed air.

e. Drive or press in a new bearing until the bearing seats in the recess in the gearcase.

f. Apply gasket sealer to the periphery of the seal.

g. Position a new seal in the cover recess with its open end facing the inside of the gearcase. Drive the seal into place with a suitably sized seal driver or socket.

h. Refer to Chapter Seven and reinstall the governor shaft.

14. Reverse the removal procedure to reinstall the timing gearcase. Refer to **Table 4** for the tightening torque of the gearcase retaining screws.

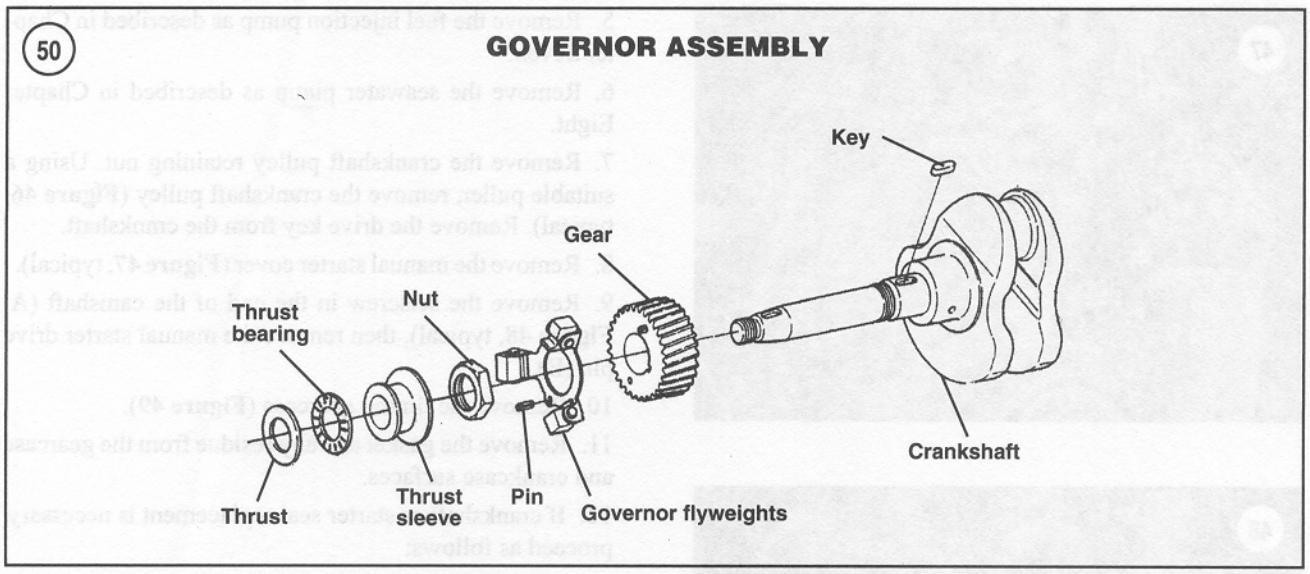

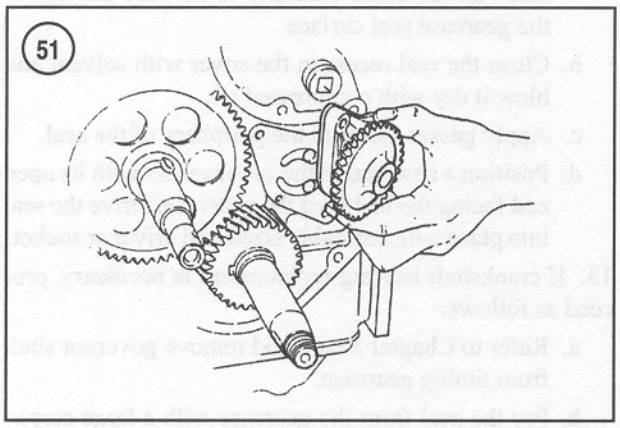

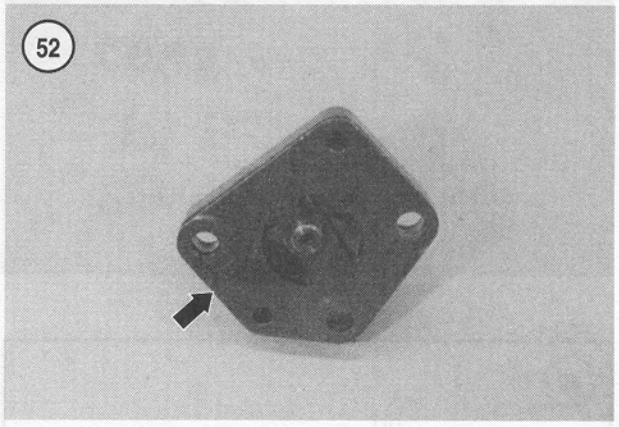

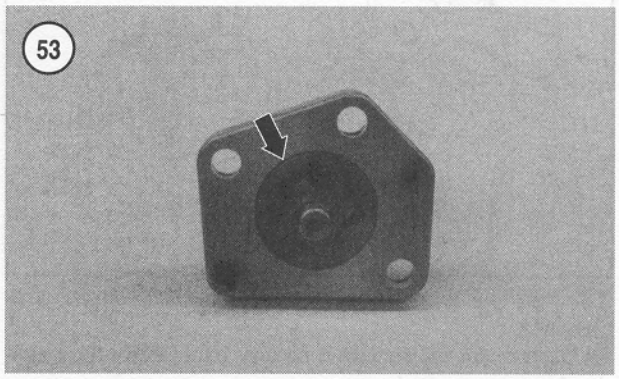

LUBRICATION SYSTEM

Refer to Chapter Two for lubrication system operation, diagrams and oil pressure test.

Oil Pump

The oil pump is mounted on the front (timing gear) side of the cylinder block (**Figure 45**).

Removal and installation

1. Remove the timing gearcase as previously described.
2. Remove the governor thrust washer (**Figure 50**), thrust bearing and thrust sleeve from the crankshaft.
3. Using a suitable tool (if available, Yanmar special tool 124085-92700), unscrew the crankshaft nut.
4. Remove the governor flyweight assembly.
5. Remove the oil pump (**Figure 51**) and gasket.
6. Clean any gasket residue from the oil pump and engine.

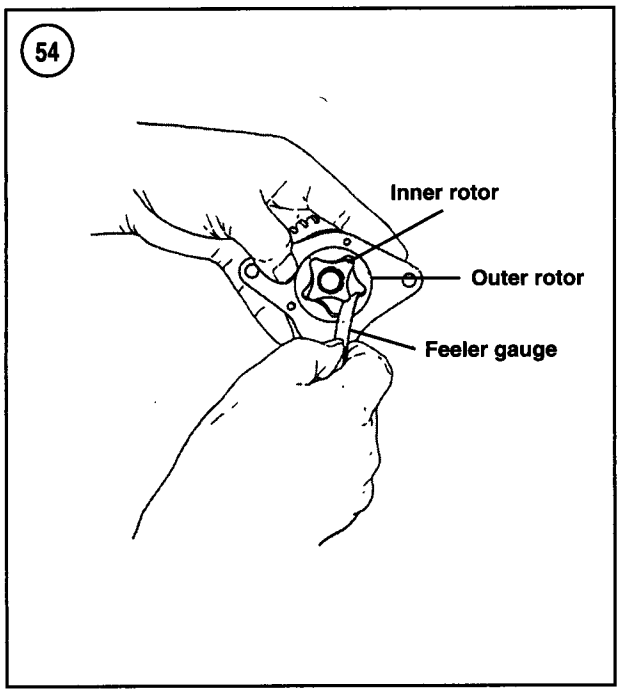

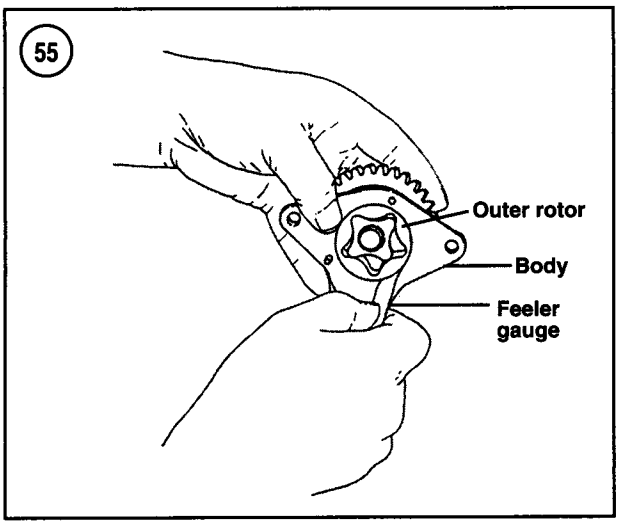

7. Installation is the reverse of removal. Tighten the oil pump retaining screws to the tightening torque specified in **Table 2**. Be sure the governor flyweight assembly is positioned on the locating pin (**Figure 50**).Tighten the crankshaft nut to the tightening torque specified in **Table 4**.

Disassembly, inspection and reassembly

1. Remove the oil pump cover (**Figure 52**).
2. Lift out the inner and outer pump rotors (**Figure 53**).

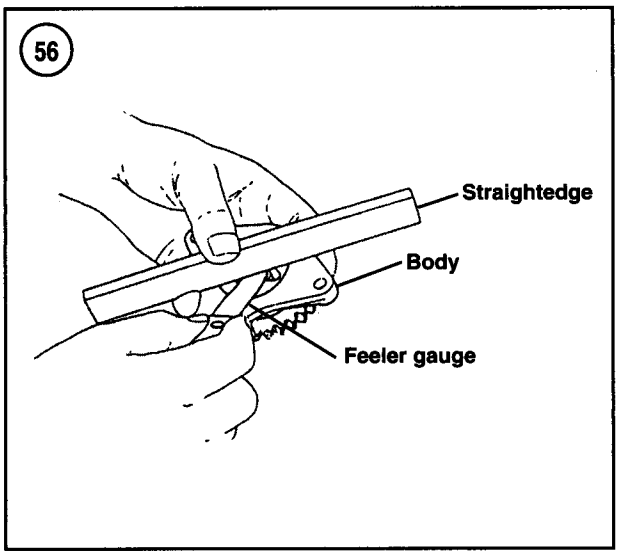

3. Thoroughly clean all parts in solvent and blow them dry with compressed air.

4. Check the drive spindle and pump rotors for signs of wear, scoring or damage. Replace damaged parts.

NOTE
The oil pump shaft and gear are pressed together; do not attempt to disassemble them. The oil pump must be replaced as a unit assembly if any parts are damaged.

5. Reinstall the inner rotor in the pump body. Reinstall the outer rotor in the pump body.

6. Measure the clearance between the inner rotor tip and outer rotor tip (**Figure 54**). Compare the results with specifications in **Table 1**.

7. Measure the clearance between the outer rotor and the pump body (**Figure 55**). Compare the results with specifications in **Table 1**.

8. Place a straightedge across the pump body. Measure the side clearance between the rotors and straightedge with a flat feeler gauge (**Figure 56**). Compare the measurement with specifications in **Tables 1-3**.

9. Measure the diameter of the inner rotor shaft. Measure the shaft bore of the pump body. Calculate shaft clearance and compare it with specifications in **Tables 1-3**.

10. If any clearance measured in Steps 6-9 is not with specifications, replace the pump. Individual components are not available. The pump must be replaced as a unit.

11. When reassembling the oil pump, be sure to lubricate the rotors, body and shaft with engine oil.

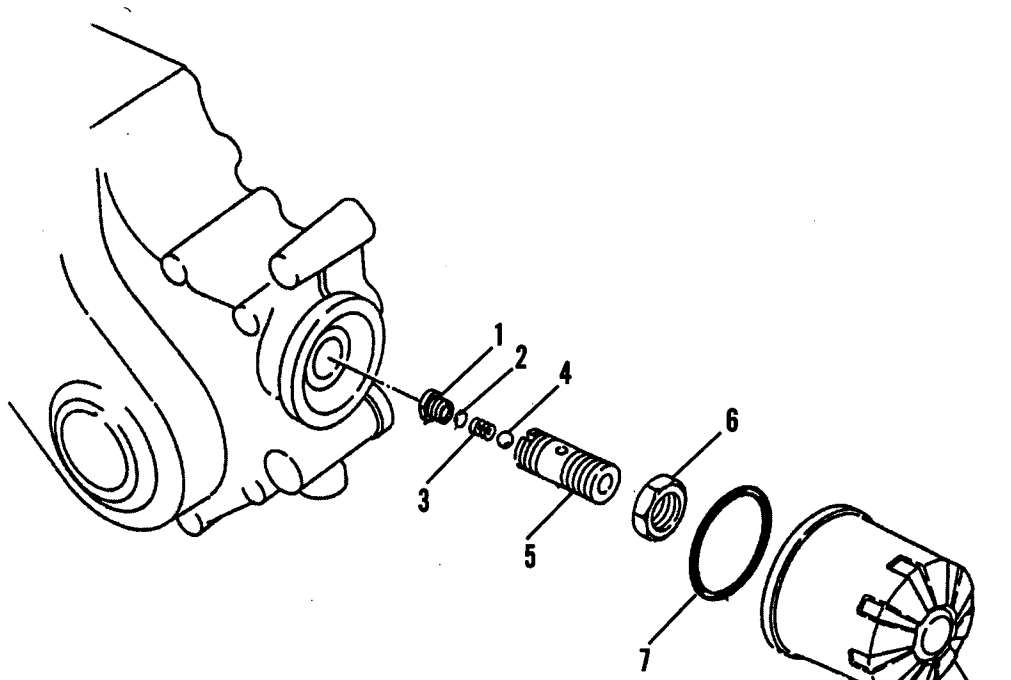

Pressure relief valve

An oil pressure relief valve is located in the oil filter mounting pipe (**Figure 57**). If oil pressure exceeds 300-400 kPa (43-57 psi), the relief valve opens and expels oil into the timing gearcase.

Do not attempt to disassemble the oil pressure relief valve. The valve is sealed and it must be replaced as a unit assembly.

Oil pickup

The oil pickup is located in the oil pan. The pickup includes a strainer to prevent foreign matter from entering the lubrication system.

To remove the oil pickup, remove the oil pan and unscrew the jam nut (**Figure 58**).

FLYWHEEL

Removal/Installation

1. Remove the engine from the boat.
2. Remove the transmission.
3. Remove the drive disc (**Figure 59**, typical).
4. Gradually loosen and remove the flywheel bolts, working in a diagonal pattern. Install two drive disc screws into two outer holes in the flywheel (**Figure 60**, typical), then use the screws to pull and remove the flywheel.
5. Inspect the ring gear. If the ring gear is excessively worn or damaged, use the following procedure to remove the ring gear:
   a. Heat the ring gear evenly, then drive the ring gear off the flywheel.

58

OIL PICKUP
2GM, 1GM10, 3GM AND 3GM30
(TYPICAL)

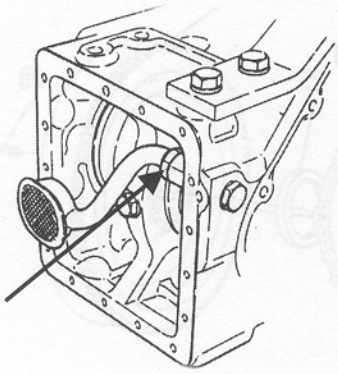

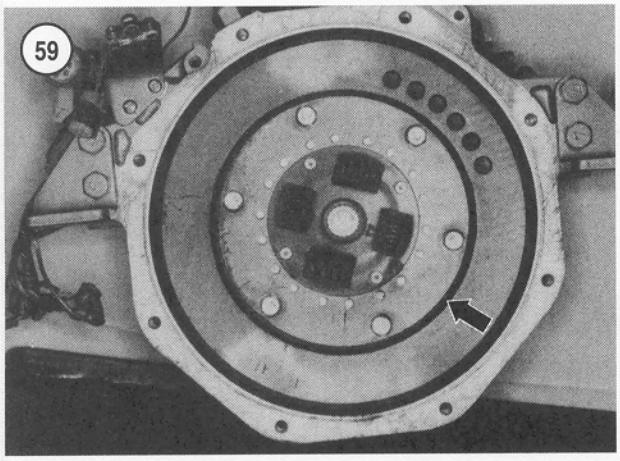

b. Heat the ring gear prior to installation. Drive the ring gear onto the flywheel while being careful not to damage the gear teeth.

6. Reverse the removal procedure to install the flywheel. Tighten the flywheel retaining bolts to the tightening torque specified in **Table 4**. Refer to Chapters Ten and Eleven to install the drive disc and transmission.

DRIVE DISC

Refer to Chapters Ten and Eleven for information concerning the drive disc (**Figure 59**).

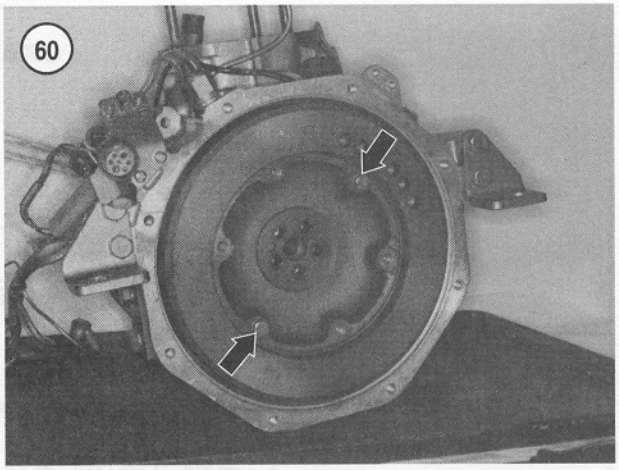

CRANKSHAFT

Removal and Installation

Refer to **Figure 61** for an exploded view of the crankshaft assembly.

1. Remove the flywheel as previously described.
2. Remove the bellhousing (A, **Figure 62**, typical).
3. Remove the piston and connecting rod as previously described.
4. Remove the oil pump as previously described.
5. Remove the crankshaft gear.
6. Install a dial indicator as shown in **Figure 63** and measure crankshaft end play. Compare the measurement with the specification in **Tables 1-3**. If end play is excessive, inspect the main bearing as described in *Main Bearings*.
7. Remove the main bearing housing (B, **Figure 62**, typical).
8. Position the engine so the crankshaft is vertical with the flywheel end up.
9. Attach a hoist to the flywheel end of the crankshaft.

NOTE

Two-cylinder engines are equipped with one intermediate bearing carrier. Three-cylinder engines are equipped with two intemediate bearing carriers.

10. Remove the retaining bolt(s) for the intermediate main bearing carrier(s). See **Figure 64**.

NOTE

Adjusting the lifting tension on the crankshaft may ease or increase the force necessary to unscrew the retaining bolt(s) for the intermediate main bearing carrier(s).

61

CRANKSHAFT

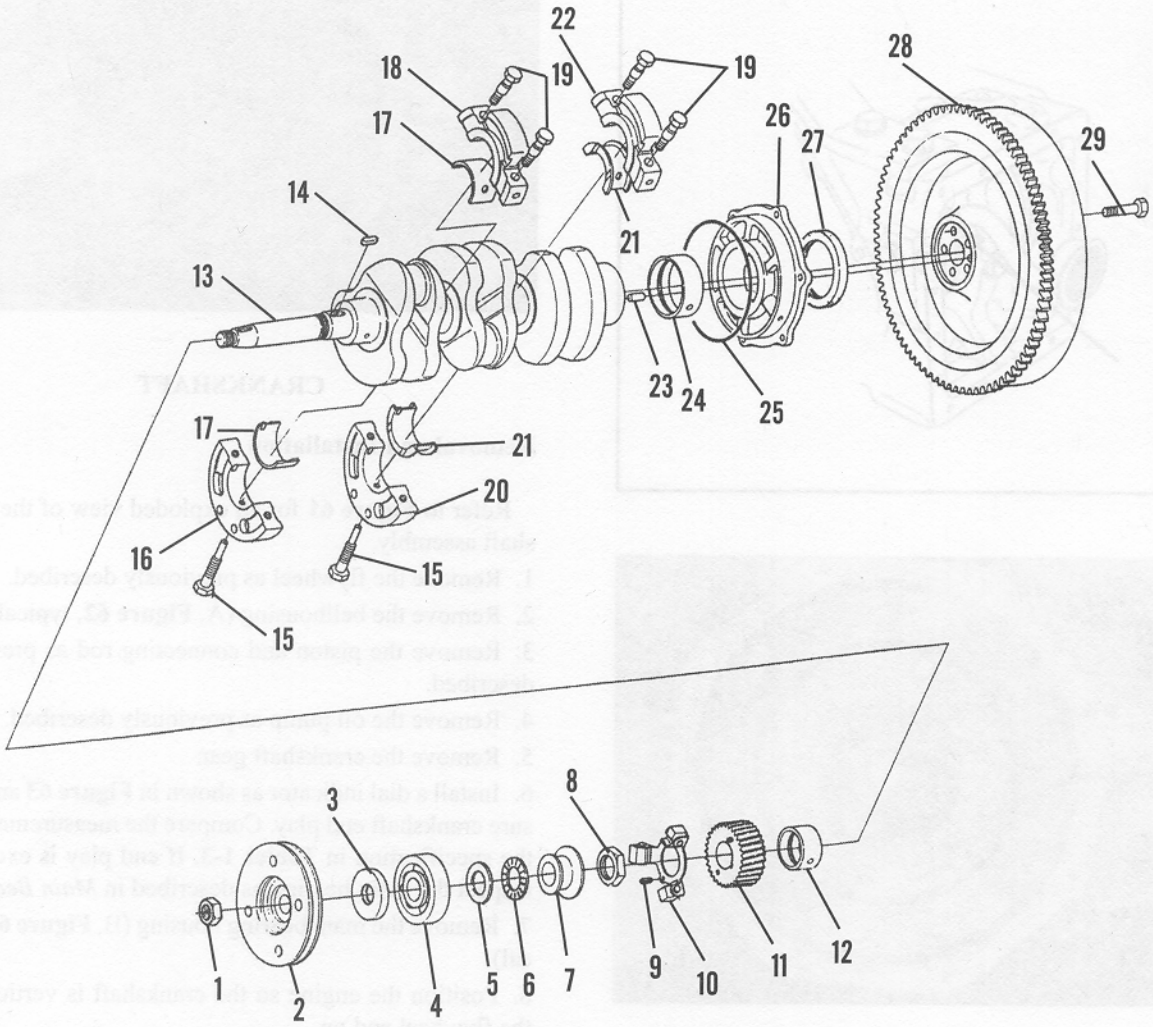

1. Nut
2. Pulley
3. Oil seal
4. Bearing
5. Thrust washer
6. Thrust bearing
7. Thrust sleeve
8. Nut
9. Pin
10. Governor flyweight assy.
11. Gear
12. Main bearing
13. Crankshaft
14. Key
15. Bolt
16. Lower main bearing holder
17. Main bearing insert
18. Upper main bearing holder
19. Bolts
20. Lower main bearing holder
21. Main bearing insert
22. Upper main bearing holder
23. Pin
24. Main bearing
25. O-ring
26. Main bearing holder
27. Oil seal
28. Flywheel
29. Bolt

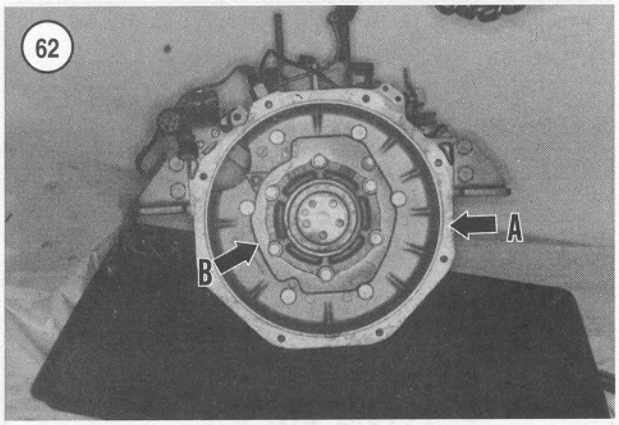

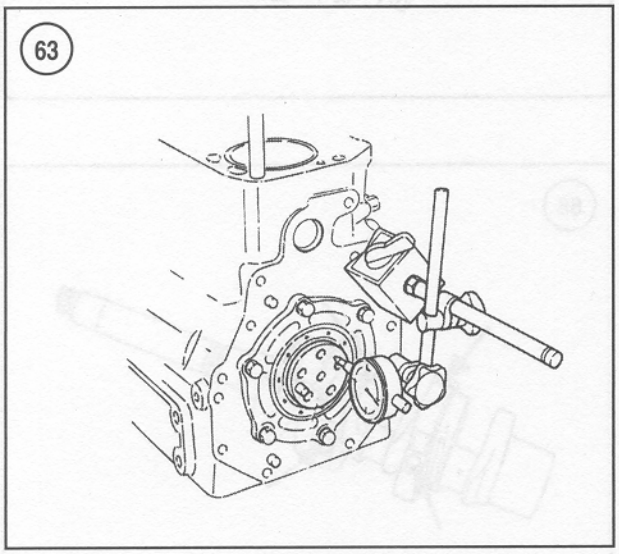

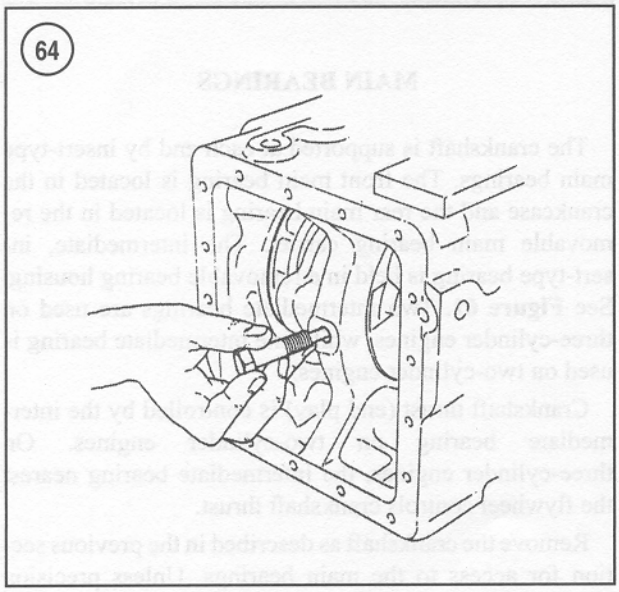

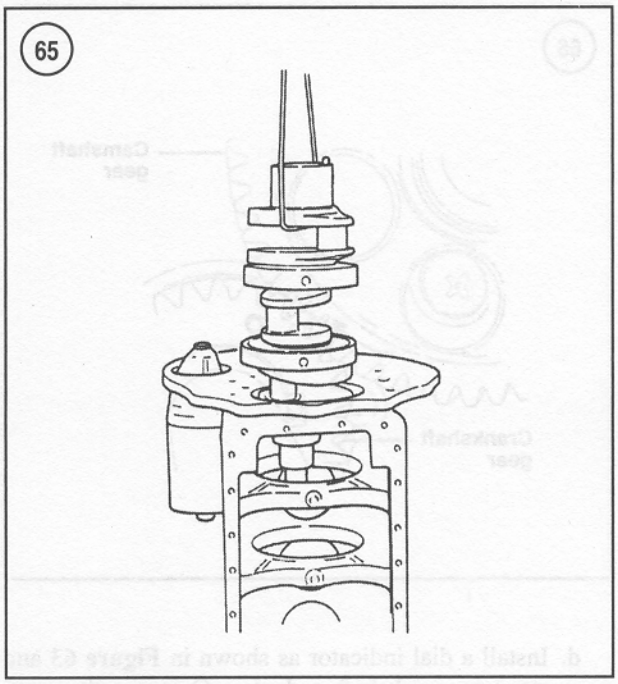

11. Carefully lift the crankshaft out of the engine (**Figure 65**).

12. Proceed as follows to replace the crankshaft seal in the main bearing housing:

a. Pry the old seal from the main bearing housing with a large screwdriver. Work carefully to prevent damage to the main bearing housing seal surface.

b. Clean the seal recess in the housing with solvent and blow it dry with compressed air.

c. Apply gasket sealer to the periphery of the seal.

d. Position the new seal in the housing recess with its open end facing the inside of the bearing housing. Drive the seal into place with a suitably sized seal driver.

13. Refer to the *Main Bearings* section for information concerning service to the main bearings and thrust bearings.

14. Reinstall the crankshaft by reversing the removal procedure while noting the following:

a. Thoroughly lubricate the main bearings and thrust bearings.

b. Be sure to install a new O-ring on the main bearing housing.

c. Tighten the main bearing and intermediate housing bolts to the tightening torque specified in **Table 4**. After tightening, rotate the crankshaft to be sure it rotates freely. If not, loosen, then retighten the intermediate main bearing housing bolts.

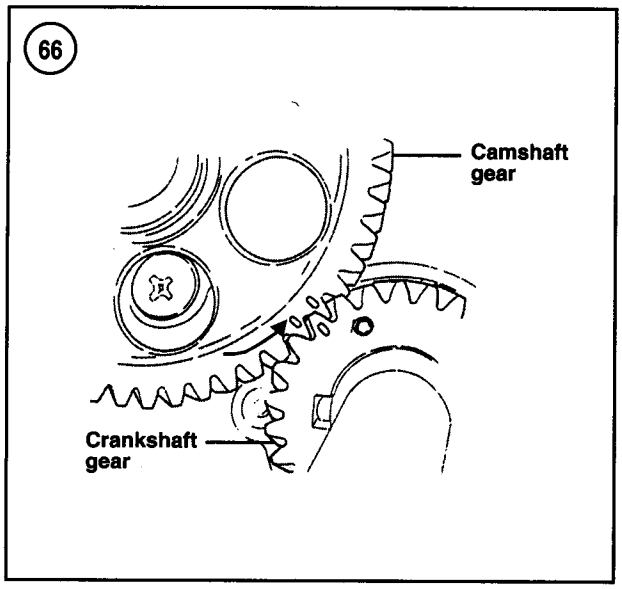

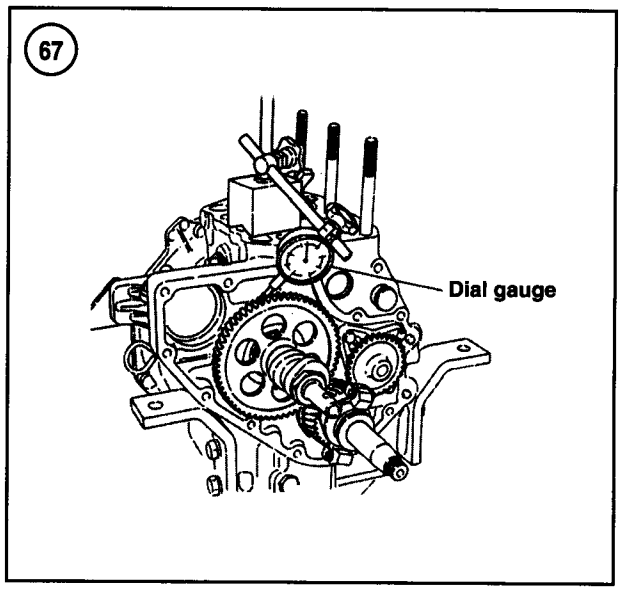

d. Install a dial indicator as shown in **Figure 63** and measure crankshaft end play. Compare the measurement with the specification in **Tables 1-3**. If end play is incorrect, refer to the *Main Bearings* section to determine the cause.
e. Align the timing marks (**Figure 66**) on the camshaft and crankshaft gears when installing the crankshaft gear.
f. Check timing gear backlash by installing a dial indicator as shown in **Figure 67** or by rotating the gear teeth with soft solder between the gear teeth. Compare the measurement with the specification in **Tables 1-3**. If gear backlash is incorrect, replace the camshaft and crankshaft gears.

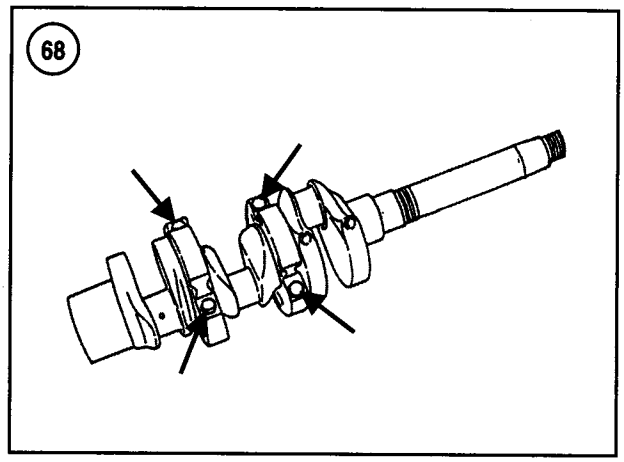

Inspection

1. Clean the crankshaft thoroughly with solvent. Blow out the oil passages with compressed air.
2. Check the main and connecting rod journals for wear, scratches, grooves, scoring or cracks. Check oil seal surface for burrs, nicks or other sharp edges that might damage a seal during installation.

NOTE
Unless precision measuring equipment is available, have a machine shop perform Step 3.

3. Check all journals against specifications (**Tables 1-3**) for out-of-roundness and taper. Have the crankshaft reground, if necessary, and install new undersize bearings.

MAIN BEARINGS

The crankshaft is supported at each end by insert-type main bearings. The front main bearing is located in the crankcase and the rear main bearing is located in the removable main bearing carrier. The intermediate, insert-type bearing is held in a removable bearing housing. See **Figure 61**. Two intermediate bearings are used on three-cylinder engines, while one intermediate bearing is used on two-cylinder engines.

Crankshaft thrust (end play) is controlled by the intermediate bearing on two-cylinder engines. On three-cylinder engines, the intermediate bearing nearest the flywheel controls crankshaft thrust.

Remove the crankshaft as described in the previous section for access to the main bearings. Unless precision

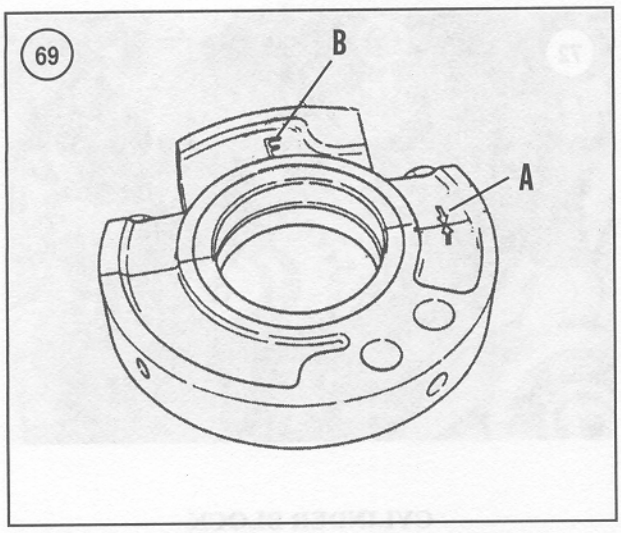

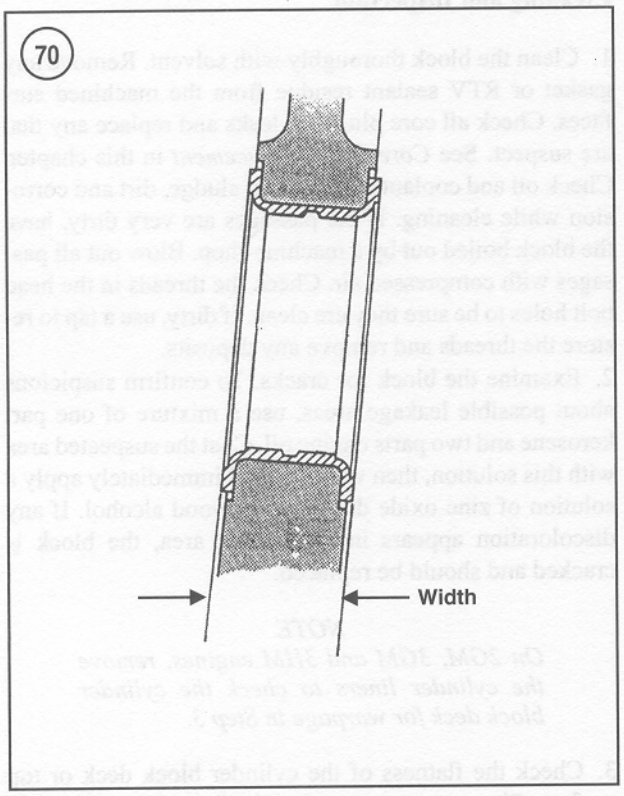

measuring equipment is available, have a dealership or machine shop measure main bearing dimensions. Refer to specifications in **Tables 1-3**.

If front or rear bearing replacement is necessary, have the main bearings replaced by a dealership or machine shop. Be sure the oil holes in the main bearings align with the oil passages in the crankcase and main bearing carrier.

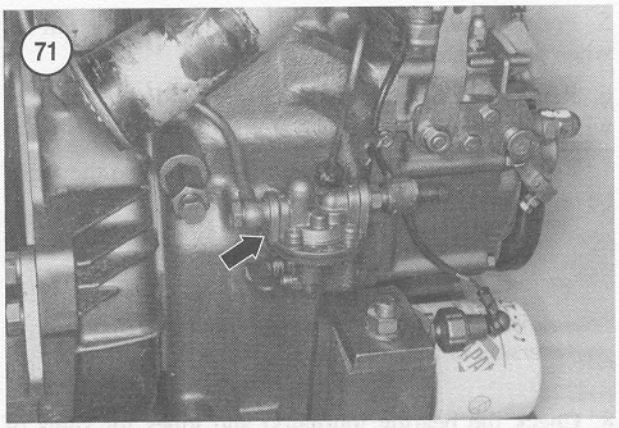

6

Intermediate Main Bearing

1. Remove the intermediate bearing housing bolts (**Figure 68**).
2. Separate the intermediate bearing housing halves from the crankshaft.
3. Inspect the bearings for excessive wear and damage.
4. Reassemble the intermediate bearing housing including the bearing inserts. Assemble the bearing housing so the arrows (A, **Figure 69**) at the parting surfaces are on the same side. Tighten the bolts to the torque specified in **Table 2**.
5. Measure the crankshaft and bearing diameters and compare them with the specifications in **Tables 1-3**.
6. Measure the width of the intermediate thrust bearing (**Figure 70**) and compare it with the specification in **Table 1**.
7. Be sure to lubricate the bearing inserts with oil before installing the intermediate main bearing housing on the crankshaft. Install the bearing housing on the crankshaft so the F mark (B, **Figure 69**) on the housing faces toward the flywheel end of the crankshaft.
8. Tighten the bearing housing bolts to the torque specified in **Table 4**.

CAMSHAFT

Removal and Installation

1. Remove the fuel transfer pump (**Figure 71**, typical).
2. Remove the crankshaft as previously described.
3. Prevent rotation of the camshaft gear by holding a screwdriver or other tool against the camshaft bearing retaining screw (**Figure 72**, typical).
4. Remove the camshaft gear nut (**Figure 73**), fuel injection pump cam and camshaft gear.

5. Position the engine so the valve lifters will not fall out when the camshaft is withdrawn.

6. Remove the bearing retaining screw (**Figure 74**), then withdraw the camshaft.

7. Remove the valve lifters and mark them so they may be reinstalled in their original locations.

NOTE

If precision measuring equipment is not available, have Step 8 performed by a dealership or machine shop.

8. Check the bearing journal(s) and lobes for signs of wear or scoring.

9. Measure the bearing journal(s) and lobes (**Figure 75**) and compare the results to the specifications in **Tables 1-3**. Replace the camshaft if the journal or lobes do not meet specifications.

10. Measure the stem diameter of the valve lifters and compare it to the specification in **Tables 1-3**. Measure the lifter bores in the cylinder block. Calculate the lifter clearance and compare it with the specification in **Tables 1-3**. Replace the valve lifters if they do not meet specifications. Replace the valve lifter if the lifter face is scored, galled, excessively worn or otherwise damaged.

11. Replace the ball bearing if it is damaged or feels rough during rotation.

12. Installation is the reverse of removal. Note the following:

a. If installing a new camshaft, coat the camshaft lobes with camshaft break-in lubricant. If reinstalling the original camshaft, apply heavy oil to the camshaft lobes.

b. Lubricate the camshaft bearing journal(s) with heavy engine oil before reinstallation.

c. Lightly tap the end of the camshaft to seat the ball bearing in the engine. Rotate the camshaft to be sure it rotates freely.

d. Align the timing marks (**Figure 76**) on the camshaft and crankshaft gears when installing the camshaft gear.

e. Install the fuel injection cam so the side marked with a zero is out (**Figure 77**, typical).

f. Check gear backlash by installing a dial indicator as shown in **Figure 67** or by rotating the gear teeth with soft solder between the gear teeth. Compare the measurement with the specification in **Tables 1-3**. If gear backlash is incorrect, replace the camshaft and crankshaft gears.

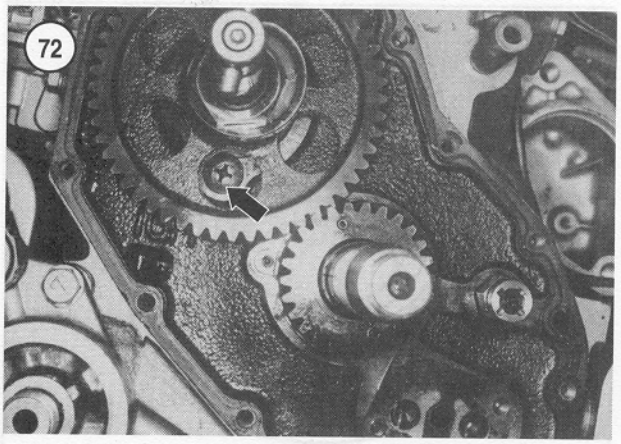

CYLINDER BLOCK

Cleaning and Inspection

1. Clean the block thoroughly with solvent. Remove any gasket or RTV sealant residue from the machined surfaces. Check all core plugs for leaks and replace any that are suspect. See *Core Plug Replacement* in this chapter. Check oil and coolant passages for sludge, dirt and corrosion while cleaning. If the passages are very dirty, have the block boiled out by a machine shop. Blow out all passages with compressed air. Check the threads in the head bolt holes to be sure they are clean. If dirty, use a tap to restore the threads and remove any deposits.

2. Examine the block for cracks. To confirm suspicions about possible leakage areas, use a mixture of one part kerosene and two parts engine oil. Coat the suspected area with this solution, then wipe dry and immediately apply a solution of zinc oxide dissolved in wood alcohol. If any discoloration appears in the treated area, the block is cracked and should be replaced.

NOTE

On 2GM, 3GM and 3HM engines, remove the cylinder liners to check the cylinder block deck for warpage in Step 3.

3. Check the flatness of the cylinder block deck or top surface. Place an accurate straightedge on the block. If there is any gap between the block and straightedge, measure it with a flat feeler gauge (**Figure 78**). Measure from end to end and from corner to corner. Have the block resurfaced if it is warped more than 0.07 mm (0.0028 in.).

4. *On 2GM20, 3GM30 and 3HM35 models*—Measure the cylinder bores with a bore gauge (**Figure 79**) for out-of-roundness or excessive wear as described in *Piston/Clylinder Bore Check* in this chapter. If the cylinders exceed maximum tolerances, they must be rebored.

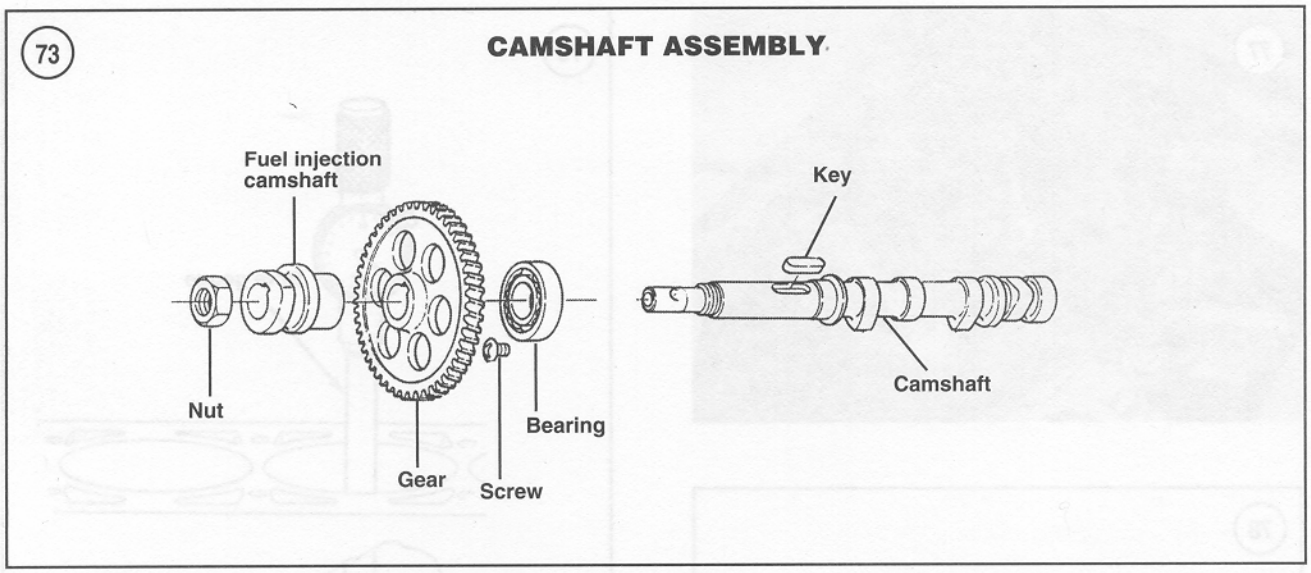

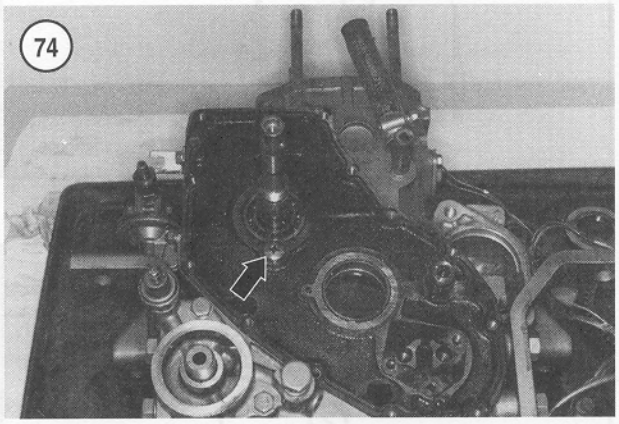

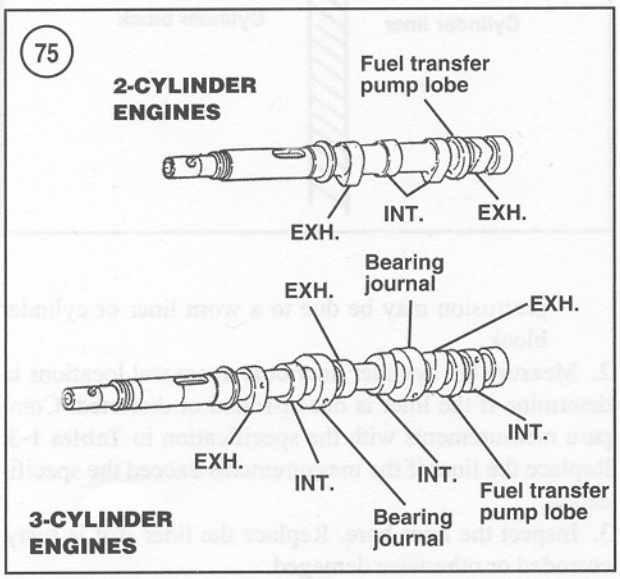

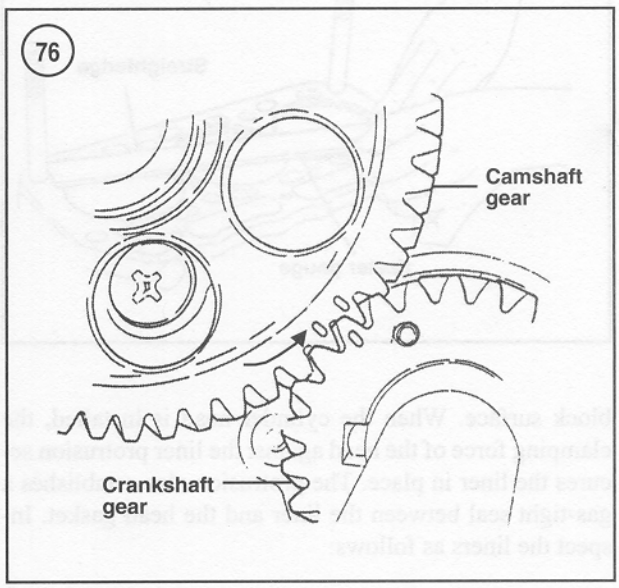

Reboring is also necessary if the cylinder walls are badly scuffed or scored.

Cylinder Liners 2GM, 3GM and 3HM (Including F and D Series) Models

Have cylinder liners replacement performed by a dealership or diesel engine shop. The liner is available in different outside diameters so a precise fit between the liner and cylinder block may be obtained. The upper flanged end of the liner fits in a step at the upper end of the cylinder bore. Each liner must protrude above the cylinder

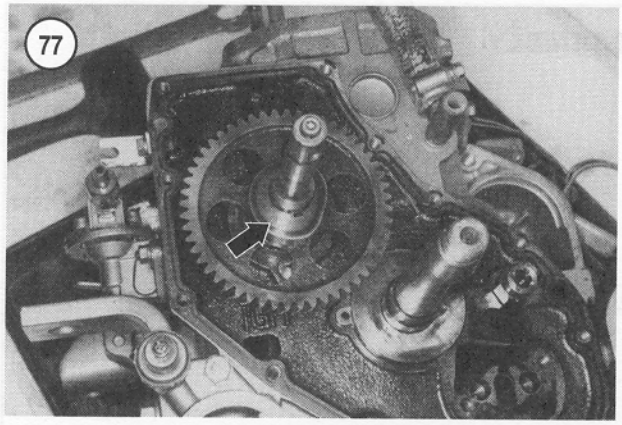

77

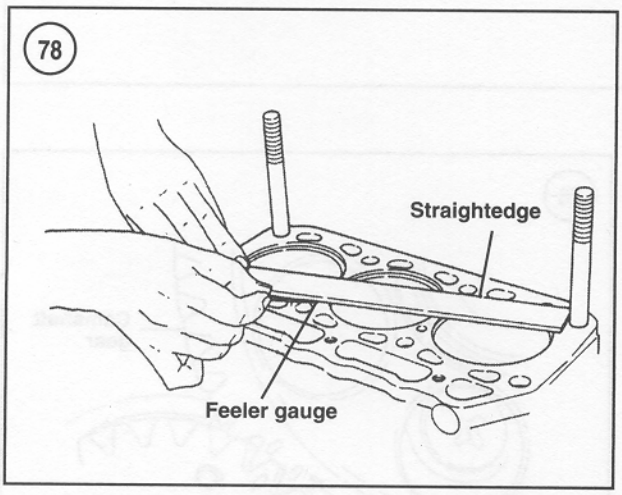

78

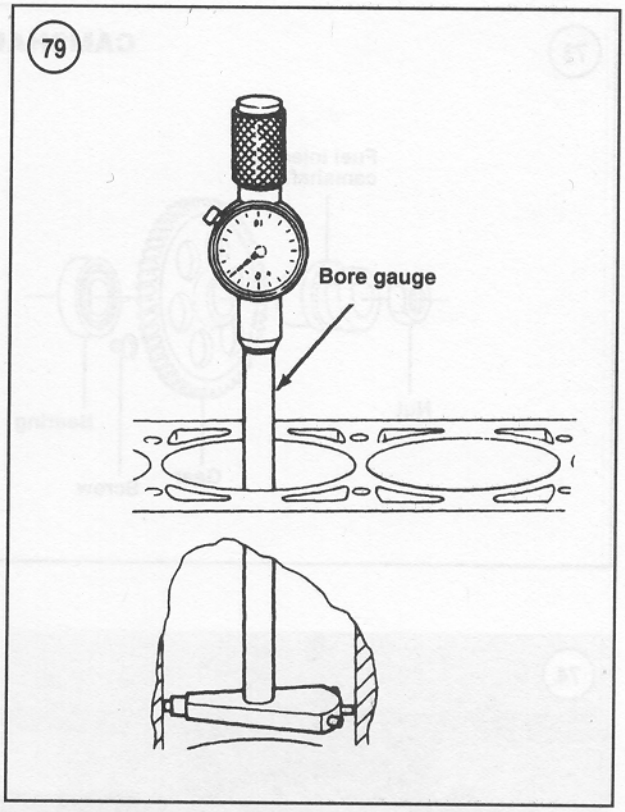

79

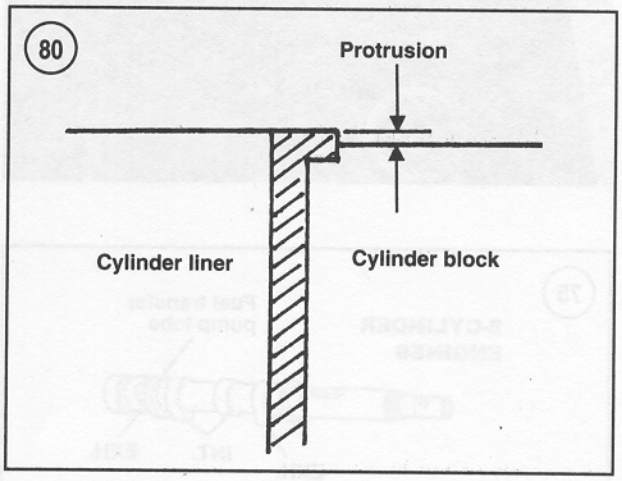

80

block surface. When the cylinder head is installed, the clamping force of the head against the liner protrusion secures the liner in place. The protrusion also establishes a gas-tight seal between the liner and the head gasket. Inspect the liners as follows:

NOTE

The liner is a close fit in the block, but it may be movable. Distortion or corrosion may freeze the liner in the block, which will necessitate a puller to remove the liner.

1. Measure liner protrusion above the cylinder block (**Figure 80**) and compare the result with the specification in **Tables 1-3**.
   a. Excess protrusion may damage the head gasket. Excess protrusion may be caused by improper seating of the liner flange in the block, possibly due to corrosion.
   b. Insufficient protrusion may allow compression leaks and liner movement in the block. Insufficient protrusion may be due to a worn liner or cylinder block.
2. Measure the cylinder liner bore at several locations to determine if the liner is out-of-round or distorted. Compare measurements with the specification in **Tables 1-3**. Replace the liner if the measurements exceed the specification.
3. Inspect the liner bore. Replace the liner if it is rusty, corroded or otherwise damaged.

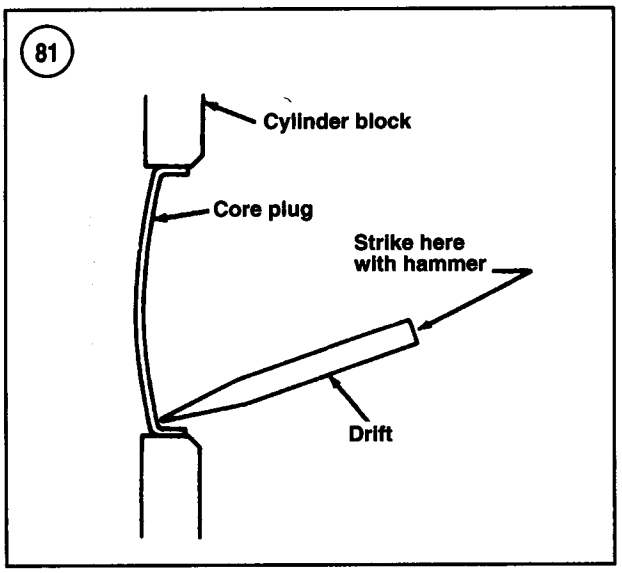

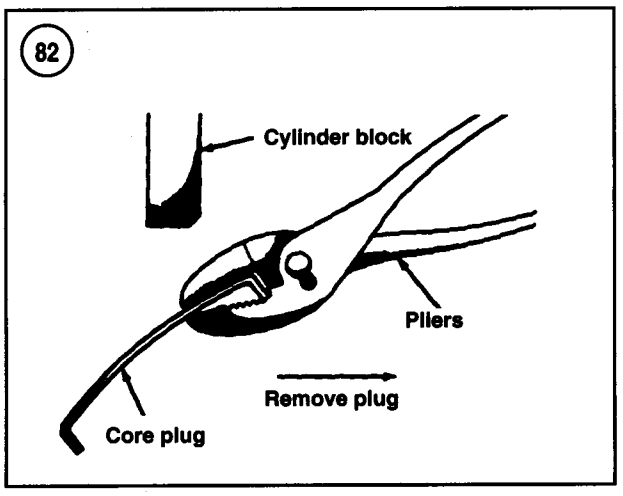

Core Plug Replacement

Check the condition of all core plugs in the block whenever the engine is out of the boat for service. If any signs of leakage or corrosion are found around one core plug, replace them all. Core plugs in the cylinder block prevent damage to the block should the coolant freeze. The cylinder block of 2GM, 3GM and 3HM engines is equipped with cast iron, removable cylinder liners. See *Cylinder Liners* in this chapter.

NOTE
A machine shop can replace core plugs inexpensively. If machine work on the engine is necessary, have the core plugs replaced at the same time.

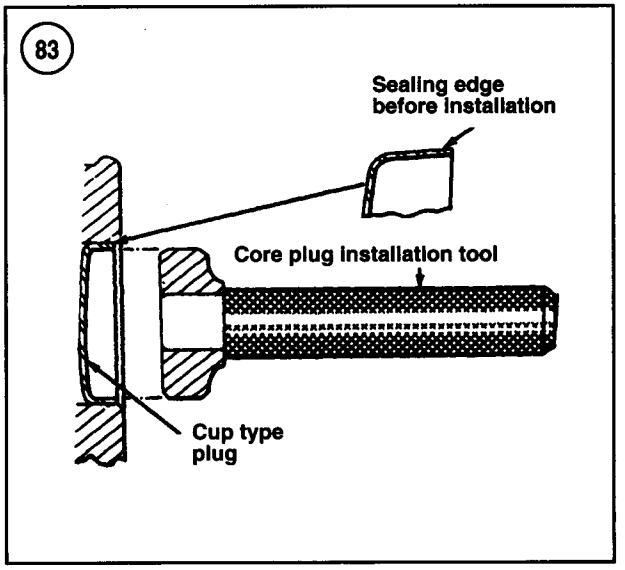

Removal and Installation

CAUTION
Do not drive core plugs into the engine casting. It will be impossible to retrieve them and they can restrict coolant circulation, resulting in serious engine damage.

1. Tap the bottom edge of the core plug with a hammer and drift. Use several sharp blows to push the bottom of the plug inward, tilting the top out (**Figure 81**).
2. Grip the top of the plug firmly with pliers. Pull the plug from its bore (**Figure 82**) and discard.

NOTE
It is also possible to remove core plugs by drilling a hole in the center of the plug and prying it out with an appropriate size drift or pin punch. When removing a large core plug, the use of a universal impact slide hammer is recommended.

3. Clean the plug bore thoroughly to remove all traces of the old sealer. Inspect the bore for any damage that might interfere with proper sealing of the new plug.
4. Coat the inside diameter of the plug bore and the outer diameter of the new plug with sealer. Use an oil-resistant sealer if the plug is to be installed in an oil gallery or a water-resistant sealer for plugs installed in the water jacket.
5. Install the new core plug with an appropriate size core plug installation tool (**Figure 83**), driver or socket. Position the outside edge of the plug 2-3 mm (0.08-0.12 in.) inside the block.
6. Repeat Steps 1-5 to replace each remaining core plug.

Table 1 ENGINE SPECIFICATIONS (2GM AND 2GM20)

Bore	
2GM	72 mm (2.83 in.)
2GM20	75 mm (2.95 in.)
Stroke	72 mm (2.83 in.)
Displacement	
2GM	586 cc (35.7 cu. in.)
2GM20	636 cc (38.8 cu. in.)
Number of cylinders	2
Firing order	1-2
Cylinder liner diameter (2GM)	72.000 mm (2.8346 in.)
Cylinder liner protrusion (2GM)	0.005-0.075 mm (0.0002-0.0030 in.)
Cylinder bore diameter (2GM20)	75.000-75.030 mm (2.9528-2.9540 in.)
Bore/liner out-of-round—max.	0.02 mm (0.0008 in.)
Cylinder block warpage—max.	0.05 mm (0.002 in.)
Piston diameter	
2GM	
Standard	71.913-71.943 mm (2.8312-2.8324 in.)
Wear limit	71.850 mm (2.8287 in.)
2GM20	
Standard	74.910-74.940 mm (2.9492-2.9504 in.)
Wear limit	74.850 mm max. (2.9468 in.)
Piston top clearance	0.68-0.88 mm (0.027-0.035 in.)
Piston ring side clearance	
Top ring	0.065-0.100 mm (0.0026-0.0039 in.)
Second ring	0.035-0.070 mm (0.0014-0.0028 in.)
Oil ring	0.020-0.055 mm (0.0008-0.0022 in.)
Ring end gap (all rings)	0.20-0.40 mm (0.008-0.016 in.)
Piston pin diameter	19.991-20.000 mm (0.7870-0.7874 in.)
Piston pin hole diameter	
In piston	19.995-20.008 mm (0.7872-0.7877 in.)
In rod	20.000 mm (0.7874 in.)
Piston pin clearance	
In rod	0.025-0.047 mm (0.0010-0.0019 in.)
In piston	0.005 mm tight-0.017 mm loose (0.0002 in. tight-0.0007 in. loose)
Piston ring width	
Top and second ring	1.97-1.99 mm (0.0776-0.0783 in.)
Oil control ring	3.97-3.99 mm (0.1563-0.1571 in.)
Cylinder liner protrusion (2GM)	0.005-0.075 mm (0.0002-0.0030 in.)
Crankshaft main journal diameter	
Timing gear end	43.950-43.964 mm (1.7303-1.7309 in.)
Center	43.950-43.964 mm (1.7303-1.7309 in.)
Flywheel end	59.950-59.964 mm (2.3602-2.3608 in.)
Journal out-of-round—max.	0.01 mm (0.0004 in.)
Crankshaft end play	0.09-0.19 mm (0.0035-0.0075 in.)
Crankshaft runout—max.	0.15 mm (0.006 in.)
Main bearing clearance	
Timing gear end	0.036-0.092 mm (0.0014-0.0036 in.)
Center	0.036-0.092 mm (0.0014-0.0036 in.)
Flywheel end	0.036-0.095 mm (0.0014-0.0037 in.)
Intermediate thrust bearing width—min.	24.63 mm (0.970 in.)
Crankpin diameter	39.950-39.964 mm (1.5728-1.5734 in.)
Journal out-of-round—max.	0.01 mm (0.0004 in.)
Crankpin bearing clearance	0.028-0.086 mm (0.0011-0.0034 in.)
Connecting rod side clearance	0.2-0.4 mm (0.008-0.016 in.)
Cylinder head warpage—max.	0.07 mm (0.003 in.)
Camshaft	
Valve lobe lift	35.000 mm (1.3780 in.)
Fuel pump lobe lift	33.000 mm (1.2992 in.)
Journal diameter	30.000 mm (1.1811 in.)
Runout	0.02 mm max. (0.0008 in. max.)

(continued)

Table 1 ENGINE SPECIFICATIONS (2GM AND 2GM20) (continued)

Timing gear backlash	0.05-0.13 mm (0.002-0.005 in.)
Maximum allowable	0.3 mm (0.012 in.)
Push rod runout—max.	0.03 mm (0.0012 in.)
Valve lifter	
Type	Mechanical
Outside diameter	10.000 mm (0.3937 in.)
Outside diameter—min.	9.95 mm (0.3917 in.)
Clearance in block	0.010-0.040 mm (0.0004-0.0016 in.)
Max. clearance	0.10 mm (0.004 in.)
Valve face angle	45°
Valve seat angle	45°
Valve head margin	0.75-1.15 mm (0.030-0.045 in.)
Seat width (int. and exh.)	1.77 mm (0.070 in.)
Valve depth—max.	1.25 mm (0.049 in.)
Valve stem clearance	
Intake	0.040-0.065 mm (0.0016-0.0026 in.)
Exhaust	0.045-0.070 mm (0.0018-0.0028 in.)
Max. stem clearance	0.15 mm (0.006 in.)
Valve stem diameter	7.000 mm (0.2756 in.)
Valve stem wear limit	6.900 mm (0.2717 in.)
Valve stem runout—max.	0.03 mm (0.0012 in.)
Valve guide diameter	7.000 mm (0.2756 in.)
Valve guide wear limit	7.080 mm (0.2878 in.)
Valve guide protrusion	7.0 mm (0.276 in.)
Valve spring	
Standard free length	38.5 mm (1.52 in.)
Min. free length	37 mm (1.46 in.)
Installed height	29.2 mm (1.15 in.)
Pressure at installed height	16.16 kg at 29.2 mm (35.63 lb. at 1.15 in.)
Rocker arm shaft clearance	0.016-0.052 mm (0.0006-0.0020 in.)
Rocker arm shaft clearance—max.	0.15 mm (0.006 in.)
Rocker arm bore wear limit	14.10 mm (0.555 in.)
Rocker arm shaft wear limit	13.90 mm (0.547 in.)
Oil pump	
Inner rotor tip-to-outer rotor tip	0.050-0.105 mm (0.0020-0.0041 in.)
Max.	0.15 mm (0.006 in.)
Outer rotor-to-pump body	0.050-0.105 mm (0.0020-0.0041 in.)
Max.	0.15 mm (0.006 in.)
Rotor side clearance	0.030-0.080 mm
Max.	0.13 mm (0.005 in.)
Shaft clearance	0.015-0.050 mm (0.0006-0.0020 in.)
Max.	0.20 mm (0.0079 in.)

Table 2 ENGINE SPECIFICATIONS (3GM AND 3GM30)

Bore	
3GM	72 mm (2.83 in.)
3GM30	75 mm (2.95 in.)
Stroke	72 mm (2.83 in.)
Displacement	
3GM	879 cc (53.6 cu. in.)
3GM30	954 cc (58.2 cu. in.)
Number of cylinders	3
Firing order	1-2-3
Cylinder liner diameter (3GM)	72.000 mm (2.8346 in.)
Cylinder liner protrusion (3GM)	0.005-0.075 mm (0.0002-0.0030 in.)
Cylinder bore diameter (3GM30)	75.000-75.030 mm (2.9528-2.9540 in.)
Bore/liner out-of-round—max.	0.02 mm (0.0008 in.)

(continued)

Table 2 ENGINE SPECIFICATIONS (3GM AND 3GM30) (continued)

Cylinder block warpage—max.	0.05 mm (0.002 in.)
Piston diameter	
3GM	
Standard	71.913-71.943 mm (2.8312-2.8324 in.)
Wear limit	71.850 mm (2.8287 in.)
3GM30	
Standard	74.910-74.940 mm (2.9492-2.9504 in.)
Wear limit	74.850 mm (2.9468 in.)
Piston top clearance	0.68-0.88 mm (0.027-0.035 in.)
Piston ring side clearance	
Top ring	0.065-0.100 mm (0.0026-0.0039 in.)
Second ring	0.035-0.070 mm (0.0014-0.0028 in.)
Piston ring side clearance (continued)	
Oil ring	0.020-0.055 mm (0.0008-0.0022 in.)
Ring end gap (all rings)	0.20-0.40 mm (0.008-0.016 in.)
Piston pin diameter	19.991-20.000 mm (0.7870-0.7874 in.)
Piston pin hole diameter	
In piston	19.995-20.008 mm (0.7872-0.7877 in.)
In rod	20.000 mm (0.7874 in.)
Piston pin clearance	
In rod	0.025-0.047 mm (0.0010-0.0019 in.)
In piston	0.005 mm tight-0.017 mm loose (0.0002 in. tight-0.0007 in. loose)
Piston ring width	
Top and second ring	1.97-1.99 mm (0.0776-0.0783 in.)
Oil control ring	3.97-3.99 mm (0.1563-0.1571 in.)
Crankshaft main journal diameter	
Timing gear end	43.950-43.964 mm (1.7303-1.7309 in.)
Center	43.950-43.964 mm (1.7303-1.7309 in.)
Flywheel end	59.950-59.964 mm (2.3602-2.3608 in.)
Journal out-of-round—max.	0.01 mm (0.0004 in.)
Crankshaft end play	0.09-0.19 mm (0.0035-0.0075 in.)
Crankshaft runout—max.	0.15 mm (0.006 in.)
Main bearing clearance	
Timing gear end	0.036-0.092 mm (0.0014-0.0036 in.)
Center	0.036-0.092 mm (0.0014-0.0036 in.)
Flywheel end	0.036-0.095 mm (0.0014-0.0037 in.)
Crankpin diameter	39.950-39.964 mm (1.5728-1.5734 in.)
Journal out-of-round—max.	0.01 mm (0.0004 in.)
Intermediate thrust bearing width—min.	24.63 mm (0.970 in.)
Crankpin bearing clearance	0.028-0.086 mm (0.0011-0.0034 in.)
Connecting rod side clearance	0.2-0.4 mm (0.008-0.016 in.)
Cylinder head warpage—max.	0.07 mm (0.003 in.)
Camshaft	
Valve lobe lift	35.000 mm (1.3780 in.)
Fuel pump lobe lift	33.000 mm (1.2992 in.)
Journal diameter	
End journal	30.000 mm (1.1811 in.)
Center journal	41.500 mm (1.6339 in.)
Runout	0.02 mm max. (0.0008 in. max.)
Timing gear backlash	0.05-0.13 mm (0.002-0.005 in.)
Maximum allowable	0.3 mm (0.012 in.)
Push rod runout—max.	0.03 mm (0.0012 in.)
Valve lifter	
Type	Mechanical
Outside diameter	10.000 mm (0.3937 in.)
Outside diameter—min.	9.95 mm (0.3917 in.)
Clearance in block	0.010-0.040 mm (0.0004-0.0016 in.)
Max. clearance	0.10 mm (0.004 in.)
Valve face angle	45°
Valve seat angle	45°

(continued)

Table 2 ENGINE SPECIFICATIONS (3GM AND 3GM30) (continued)

Valve head margin	0.75-1.15 mm (0.030-0.045 in.)
Seat width (int. and exh.)	1.77 mm (0.070 in.)
Valve depth—max.	1.25 mm (0.049 in.)
Valve stem clearance	
Intake	0.040-0.065 mm (0.0016-0.0026 in.)
Exhaust	0.045-0.070 mm (0.0018-0.0028 in.)
Max. stem clearance	0.15 mm (0.006 in.)
Valve stem diameter	7.000 mm (0.2756 in.)
Valve stem wear limit	6.900 mm (0.2717 in.)
Valve stem runout—max.	0.03 mm (0.0012 in.)
Valve guide diameter	7.000 mm (0.2756 in.)
Valve guide wear limit	7.080 mm (0.2878 in.)
Valve guide protrusion	7.0 mm (0.276 in.)
Valve spring	
Standard free length	38.5 mm (1.52 in.)
Min. free length	37 mm (1.46 in.)
Installed height	29.2 mm (1.15 in.)
Pressure at installed height	16.16 kg at 29.2 mm (35.63 lb. at 1.15 in.)
Rocker arm shaft clearance	0.016-0.052 mm (0.0006-0.0020 in.)
Rocker arm shaft clearance—max.	0.15 mm (0.006 in.)
Rocker arm bore wear limit	14.10 mm (0.555 in.)
Rocker arm shaft wear limit	13.90 mm (0.547 in.)
Oil pump	
Inner rotor tip-to-outer rotor tip	0.050-0.105 mm (0.0020-0.0041 in.)
Max.	0.15 mm (0.006 in.)
Outer rotor-to-pump body	0.050-0.105 mm (0.0020-0.0041 in.)
Max.	0.15 mm (0.006 in.)
Rotor side clearance	0.030-0.080 mm
Max.	0.13 mm (0.005 in.)
Shaft clearance	0.015-0.050 mm (0.0006-0.0020 in.)
Max.	0.20 mm (0.0079 in.)

Table 3 ENGINE SPECIFICATIONS (3HM AND 3HM35)

Bore	
3HM	75 mm (2.95 in.)
3HM35	80 mm (3.15 in.)
Stroke	85 mm (3.35 in.)
Displacement	
3HM	1126 cc (68.7 cu. in.)
3HM35	1282 cc (78.2 cu. in.)
Number of cylinders	3
Firing order	1-2-3
Cylinder bore diameter (3HM35)	80.000-80.030 mm (3.1496-3.1508 in.)
Cylinder liner diameter (3HM)	75.00 mm (2.9528 in.)
Max.	75.10 mm (2.9567 in.)
Cylinder liner protrusion (3HM)	0.005-0.075 mm (0.0002-0.0030 in.)
Bore/liner out-of-round—max.	0.02 mm (0.0008 in.)
Cylinder block warpage—max.	0.05 mm (0.002 in.)
Piston diameter	
3HM	
Standard	74.907-74.937 mm (2.9491-2.9503 in.)
Wear limit	74.850 mm max. (2.9468 in.)
3HM35	
Standard	79.902-79.932 mm (3.1457-3.1470 in.)
Wear limit	79.840 mm max. (3.1433 in.)
Piston top clearance	0.66-0.86 mm (0.026-0.034 in.)
Piston ring side clearance	
Top ring	0.065-0.100 mm (0.0026-0.0039 in.)
Second ring	0.035-0.070 mm (0.0014-0.0028 in.)

(continued)

Table 3 ENGINE SPECIFICATIONS (3HM AND 3HM35) (continued)

Piston ring side clearance (continued)	
Oil ring	0.020-0.055 mm (0.0008-0.0022 in.)
Ring end gap	
Top ring	0.25-0.45 mm (0.010-0.018 in.)
Second ring	0.20-0.40 mm (0.008-0.016 in.)
Oil ring	0.25-0.45 mm (0.010-0.018 in.)
Piston pin diameter	22.991-23.000 mm (0.9052-0.9055 in.)
Piston pin hole diameter	
In piston	22.995-23.008 mm (0.9053-0.9058 in.)
In rod	23.000 mm (0.9055 in.)
Piston pin clearance	
In rod	0.025-0.047 mm (0.0010-0.0019 in.)
In piston	0.005 mm tight-0.017 mm loose (0.0002 in. tight-0.0007 in. loose)
Piston ring width	
Top and second ring	1.97-1.99 mm (0.0776-0.0783 in.)
Oil control ring	3.97-3.99 mm (0.1563-0.1571 in.)
Crankshaft main journal diameter	
Timing gear end	46.950-46.964 mm (1.8484-1.8490 in.)
Intermediate	46.950-46.964 mm (1.8484-1.8490 in.)
Flywheel end	64.950-64.964 mm (2.5571-2.5576 in.)
Journal out-of-round—max.	0.01 mm (0.0004 in.)
Crankshaft end play	0.09-0.18 mm (0.0035-0.007 in.)
Crankshaft runout—max.	0.15 mm (0.006 in.)
Main bearing clearance	
Timing gear end	0.036-0.095 mm (0.0014-0.0037 in.)
Intermediate	0.036-0.095 mm (0.0014-0.0037 in.)
Flywheel end	0.036-0.099 mm (0.0014-0.0039 in.)
Intermediate thrust bearing width—min.	29.63 mm(1.166 in.)
Intermediate thrust bearing width—min.	
2GM, 2GM20, 3GM, 3GM30	24.63 mm (0.970 in.)
3HM, 3HM35	29.63 mm (1.166 in.)
Crankpin diameter	43.950-43.964 mm (1.7303-1.7309 in.)
Journal out-of-round—max.	0.01 mm (0.0004 in.)
Crankpin bearing clearance	0.036-0.092 mm (0.0014-0.0036 in.)
Connecting rod side clearance	0.2-0.4 mm (0.008-0.016 in.)
Cylinder head warpage—max.	0.07 mm (0.003 in.)
Camshaft	
Valve lobe lift	35.000 mm (1.3780 in.)
Fuel pump lobe lift	33.500 mm (1.3189 in.)
Journal diameter	
End journal	30.000 mm (1.1811 in.)
Center journal	41.500 mm (1.6339 in.)
Runout	0.02 mm max. (0.0008 in. max.)
Timing gear backlash	0.05-0.13 mm (0.002-0.005 in.)
Maximum allowable	0.3 mm (0.012 in.)
Push rod runout—max.	0.03 mm (0.0012 in.)
Valve lifter	
Type	Mechanical
Outside diameter	10.000 mm (0.3937 in.)
Outside diameter—min.	9.95 mm (0.3917 in.)
Clearance in block	0.010-0.040 mm (0.0004-0.0016 in.)
Max. clearance	0.10 mm (0.004 in.)
Valve face angle	45°
Valve seat angle	45°
Valve head margin	0.85-1.15 mm (0.034-0.045 in.)
Seat width (int. and exh.)	1.77 mm (0.070 in.)
Valve depth—max.	1.55 mm (0.061 in.)
Valve stem clearance	
Intake	0.040-0.065 mm (0.0016-0.0026 in.)
Exhaust	0.045-0.070 mm (0.0018-0.0028 in.)

(continued)

Table 3 ENGINE SPECIFICATIONS (3HM AND 3HM35) (continued)

Valve stem clearance (continued)	
Max. stem clearance	0.15 mm (0.006 in.)
Valve stem diameter	7.000 mm (0.2756 in.)
Valve stem wear limit	6.900 mm (0.2717 in.)
Valve stem runout—max.	0.03 mm (0.0012 in.)
Valve guide diameter	7.000 mm (0.2756 in.)
Valve guide wear limit	7.080 mm (0.2878 in.)
Valve guide protrusion	7.0 mm (0.276 in.)
Valve spring	
Standard free length	38.5 mm (1.52 in.)
Min. free length	37 mm (1.46 in.)
Installed height	30.2 mm (1.19 in.)
Pressure and installed height	14.43 kg at 30.2 mm (31.81 lb. at 1.19 in.)
Rocker arm shaft clearance	0.016-0.052 mm (0.0006-0.0020 in.)
Rocker arm shaft clearance—max.	0.15 mm (0.006 in.)
Rocker arm bore wear limit	14.10 mm (0.555 in.)
Rocker arm shaft wear limit	13.90 mm (0.547 in.)
Oil pump	
Inner rotor tip-to-outer rotor tip	0.050-0.105 mm (0.0020-0.0041 in.)
Max.	0.15 mm (0.006 in.)
Outer rotor-to-pump body	0.050-0.105 mm (0.0020-0.0041 in.)
Max.	0.15 mm (0.006 in.)
Rotor side clearance	0.030-0.080 mm
Max.	0.13 mm (0.005 in.)
Shaft clearance	0.015-0.050 mm (0.0006-0.0020 in.)
Max.	0.20 mm (0.0079 in.)

Table 4 TIGHTENING TORQUES

Fastener	N•m	ft.-lb.	in.-lb.
Connecting rod	25	18	216
Cylinder head			–
M8	30	22	–
M12	120	88	–
3HM, 3HM35			
M8	30	22	–
M12	130	95	–
Exhaust elbow (2GM, 2GM20)	45	33	–
Exhaust manifold (3-cylinder)	45	33	–
Flywheel	65-70	48-51	–
Intermediate bearing housing			
2GM, 2GM20, 3GM, 3GM30	30-35	22-25	–
3HM, 3HM35	45-50	33-36	–
Retaining (set) bolt	45-50	33-36	
Rear main bearing housing	25	18	–
Timing gearcase	15	11	–
Oil pump	8	–	17

Chapter Seven

Fuel Injection and Governor Systems

This chapter describes operation of the fuel injection and governor systems and service procedures. Refer to Chapter Two for troubleshooting procedures. Refer to Chapter Three for maintenance procedures. Refer to Chapter Five for a description of diesel engine operation.

Tables 1-3 are located at the end of this chapter.

WARNING

Serious fire hazards always exist around diesel fuel. Do not allow any smoking in areas where fuel is present. Always have a fire extinguisher, rated for fuel and electrical fires, on hand when refueling or servicing any part of the fuel system.

WARNING

Fuel emerges from the injector and high-pressure fuel fittings with sufficient force to penetrate the skin, which may cause blood poisoning. Wear goggles and cover exposed skin when working on high-pressure components.

FUEL INJECTION FUNDAMENTALS

Engine operation is described under *Diesel Engine Fundamentals* in Chapter Five.

The major components of the diesel fuel system are the fuel tank, fuel filters, injection pump and injection nozzle(s) (**Figure 1**). A feed (transfer) pump moves fuel from the fuel tank through the filters to the fuel injection pump. Governor operation is described in *Governor System* in this chapter.

Fuel Injection Pump

The fuel injection pump forces fuel into the fuel injector(s), which direct fuel into the engine combustion chamber. The pump raises fuel pressure to approximately 17000 kPa (2540 psi), while also controlling the time and amount of fuel injected.

The diesel injection pumps used on the engines covered in this manual operate on the plunger and cam principle. Refer to **Figure 2** and **Figure 3**. A rotating cam in the engine causes a plunger in the fuel injection pump to move in a cylinder and pump fuel to the injector nozzle. A delivery valve and spring establish the beginning and ending of injection while also maintaining residual pressure in the injection line. The plunger is designed to alter fuel flow when it is rotated. Fuel control is achieved by moving the fuel control rack, which rotates the fuel plunger pinion and plunger.

1

FUEL INJECTION SYSTEM

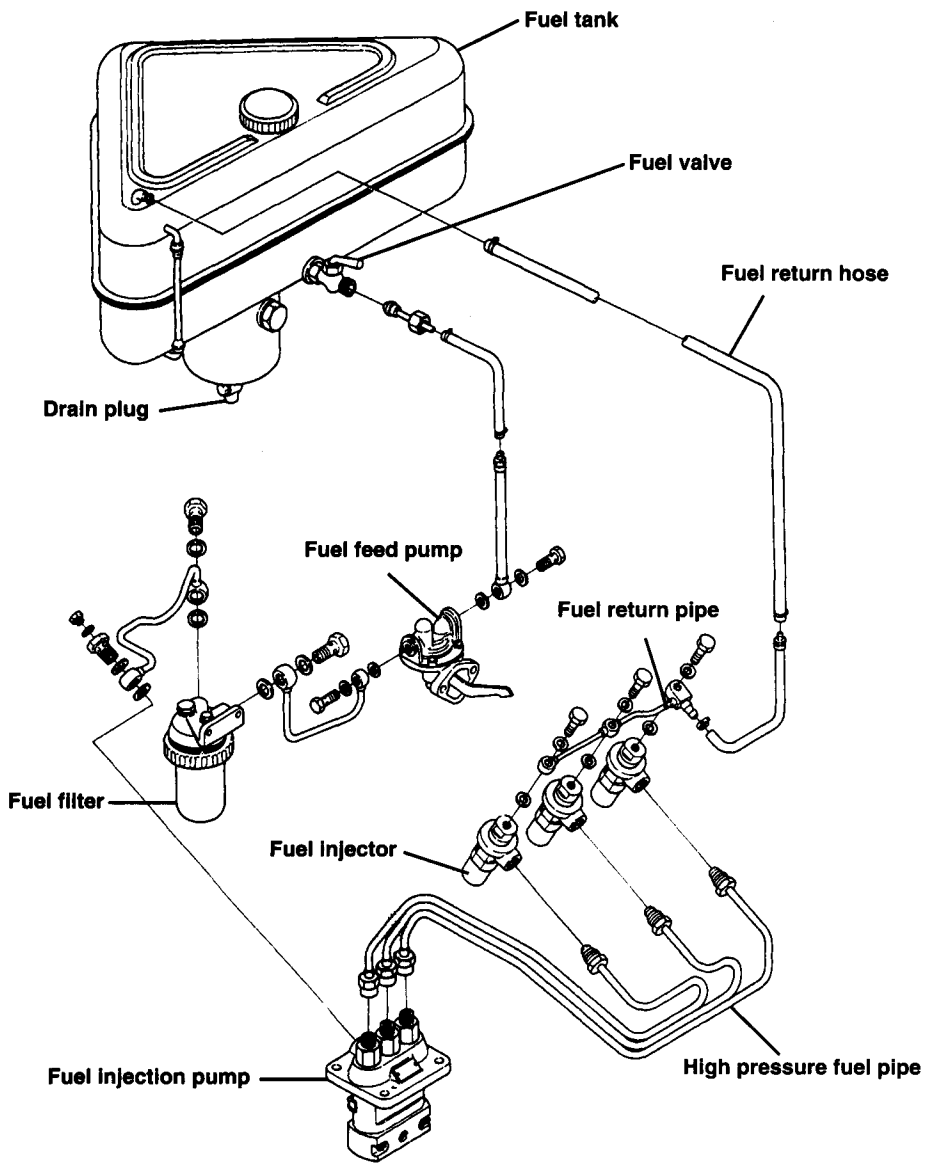

Individual pumping elements are used on single-cylinder engines as shown in **Figure 4**. Multiple-cylinder engines are equipped with pumping elements combined in a single unit as shown in **Figure 5**.

Fuel injection pumps are precision-built units that require clean fuel to operate properly. The extremely close tolerances and high injection pressure dictate that specialized equipment and experienced technicians are needed to service fuel injection pumps. If properly operated and maintained, a fuel injection pump will provide long-lasting, trouble-free service.

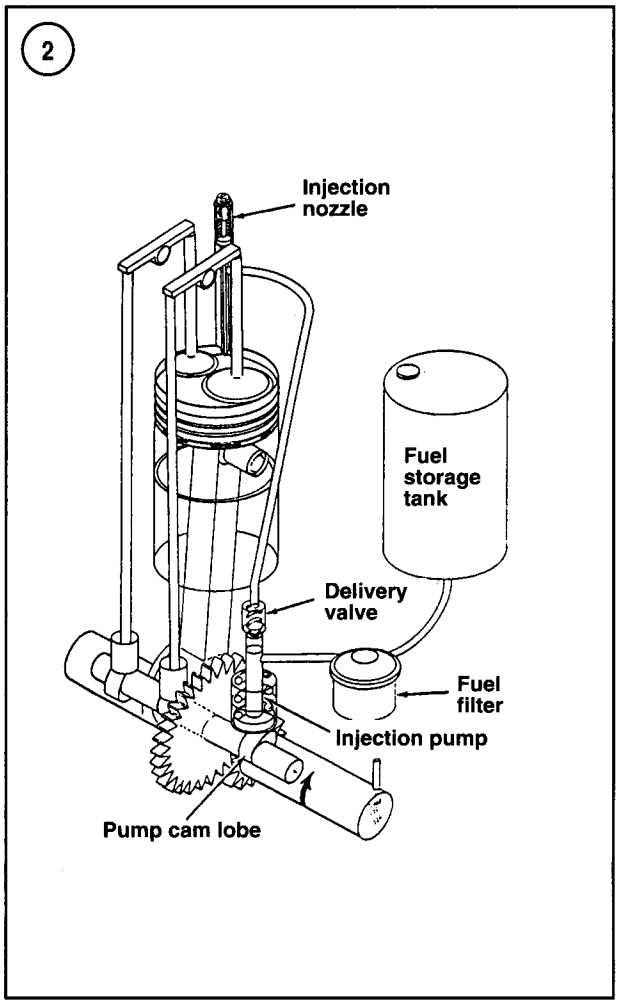

Fuel Injector

A fuel injector (A, **Figure 6**) is required for each cylinder to inject fuel into the combustion chamber. A high-pressure fuel line (B, **Figure 6**) directs fuel from the fuel injection pump to the fuel injector, while a fuel return line (C, **Figure 6**) carries bypass fuel back to the fuel tank. Refer to **Figure 7** for an exploded view of the fuel injector.

The engines covered in this manual are equipped with an inward opening, throttling-pintle type fuel injector (**Figure 8**). High fuel pressure from the injection pump enters the injection nozzle, surrounds the nozzle valve and forces the valve away from the seat. The pressure exerted by the spring above the nozzle holds the nozzle valve closed until the pressure of the fuel rises higher than spring pressure. The fuel delivered by the pump sprays from the nozzle tip into the combustion chamber when the valve opens. After the fuel is injected, fuel pressure decreases and the spring once again closes the valve.

The injection nozzle atomizes the fuel to help mix fuel with the compressed air in the engine's cylinder. The fuel must be broken into very small particles so that the fuel will quickly absorb heat from the compressed (hot) air, change to a vapor, then ignite. The design of the nozzle tip affects the size and shape of the fuel spray. The throttling pintle reduces the amount of fuel injected for a given orifice and causes a delay in the injection of the principal amount of fuel.

Excess fuel is routed from the injectors back to the fuel tank through a fuel return line.

Fuel and Fuel Filters

Clean, moisture-free fuel is very important to a diesel fuel system. As well as acting as the fuel for combustion, diesel fuel is also a lubricant for many of the internal moving parts in the fuel system. The close tolerances of the injection pump and nozzles are easily damaged by solid particles in the fuel as well as by water in the fuel.

All diesel fuel contains some sulfur, which forms sulfuric acid if water mixes with the sulfur. The sulfuric acid will quickly erode the precision parts of the pump and nozzles. Extra care must be exercised in the storage and handling of diesel fuel to prevent contamination.

Diesel fuel is graded according to the composition of the fuel after passing through the refining process. Common diesel fuel grades are 1D and 2D, with 1D the lighter fuel. The recommended fuel for the Yanmar engines covered by this manual is 2-D diesel fuel.

Filters are included within the system to remove solid particles and absorb moisture. In many cases, at least two filtering stages plus a water trap are incorporated to help ensure only clean fuel reaches the fuel injection pump. The primary filter (nearest the fuel tank) removes sediment and water from the fuel. The secondary filter removes very fine particles from the fuel. Both filters must

3

INJECTION PUMP

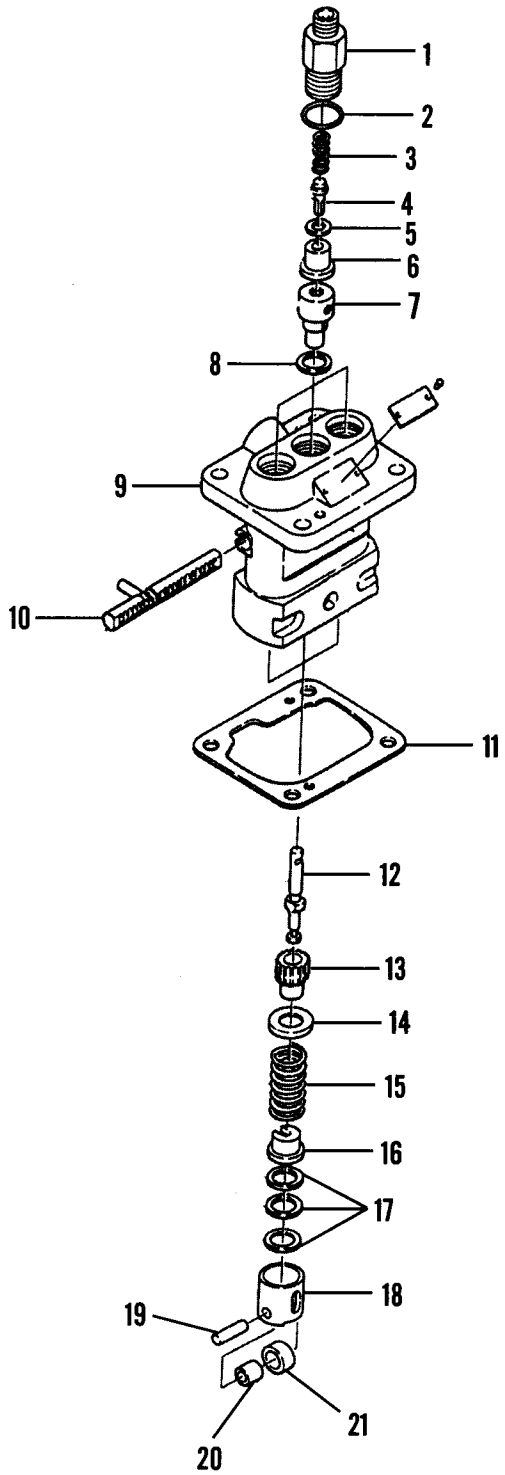

1. Delivery valve holder
2. O-ring
3. Spring
4. Delivery valve
5. Gasket
6. Delivery valve seat
7. Barrel
8. Gasket
9. Pump body
10. Control rack
11. Shims
12. Plunger
13. Control sleeve
14. Washer
15. Spring
16. Spring seat
17. Shims
18. Tappet
19. Pin
20. Bearing
21. Roller

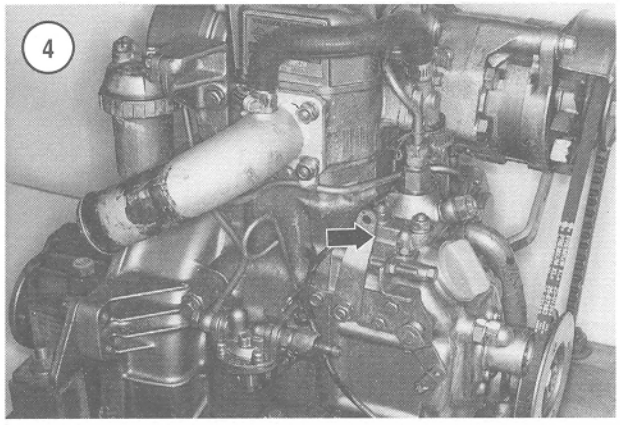

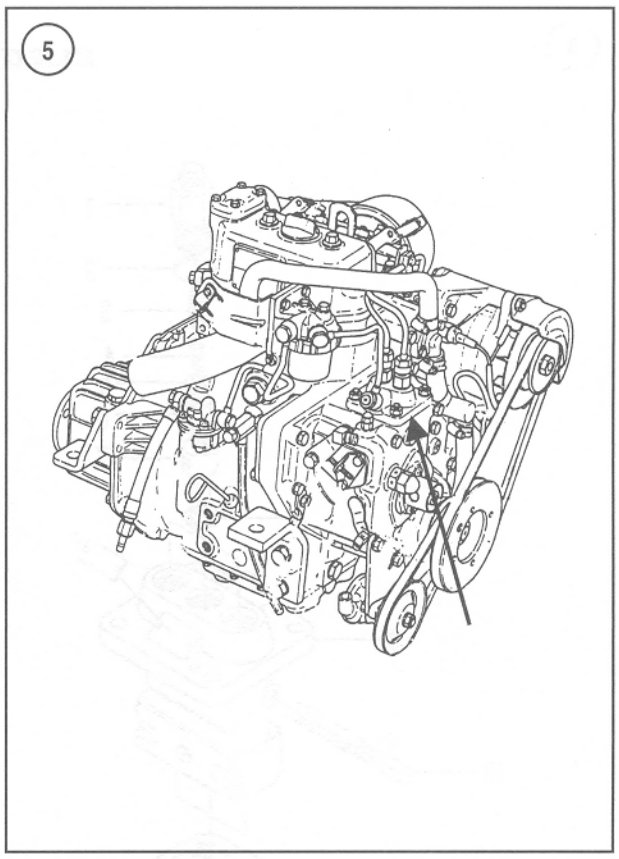

be operating properly to adequately protect the fuel injection system. Failure to maintain fuel filters and use clean fuel can result in engine stoppage and expensive replacement or repair of the injection pump or injectors.

Fuel Transfer Pump

The fuel transfer pump (A, **Figure 9**) moves fuel from the fuel tank to the fuel injection pump. The pump is necessary when the fuel tank is lower than the fuel injection pump. A primer lever on the side of the transfer pump permits manual operation of the fuel pump diaphragm. Priming or bleeding the fuel system requires operation of the primer lever so fuel flows to the injection system with the engine stopped.

FUEL INJECTION SYSTEM BLEEDING

Air in the fuel system can cause rough engine operation or stoppage. Bleeding purges air from the system. Bleed the system anytime fuel line connections are disconnected or fuel components are removed. To ensure all air is removed, perform the complete bleeding procedure described in the following steps:

1. Open the bleed screw on the fuel filter (**Figure 10**). Make sure the fuel valve on the fuel tank is open.

NOTE
Be prepared to contain and wipe up expelled fuel.

2. Operate the priming lever (B, **Figure 9**) on the fuel transfer pump while observing the fuel expelled from the bleed screw hole. Continue to operate the priming lever until air-free fuel is expelled, then close the air bleed screw.

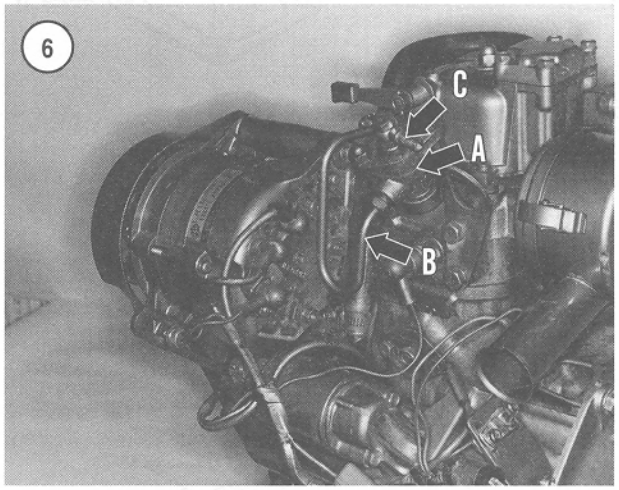

3. Open the air bleed screw (**Figure 11**) on the fuel injection pump.

4. Operate the priming lever (B, **Figure 9**) on the fuel transfer pump while observing the fuel expelled from the bleed screw hole. Continue to operate the priming lever until air-free fuel is expelled, then close the air bleed screw.

7

FUEL INJECTOR

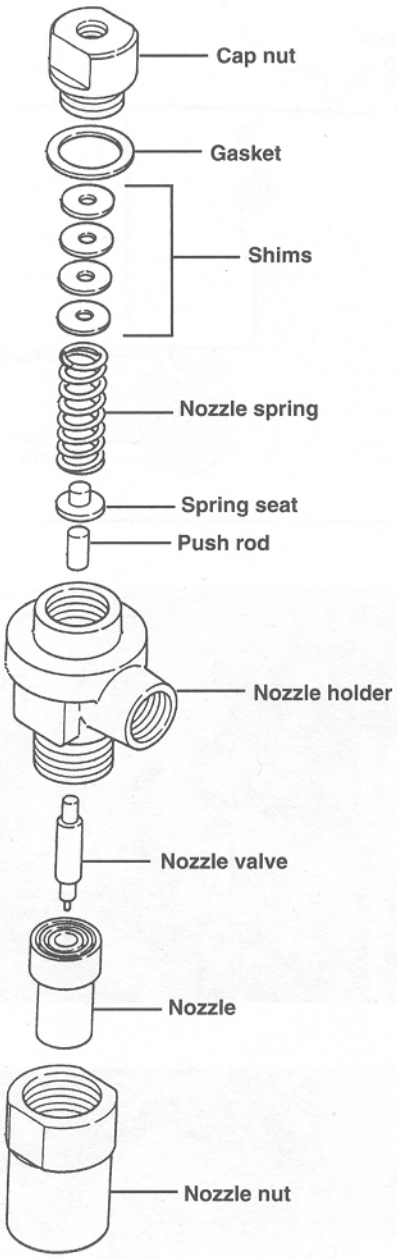

8

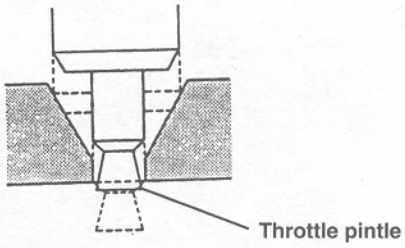

9

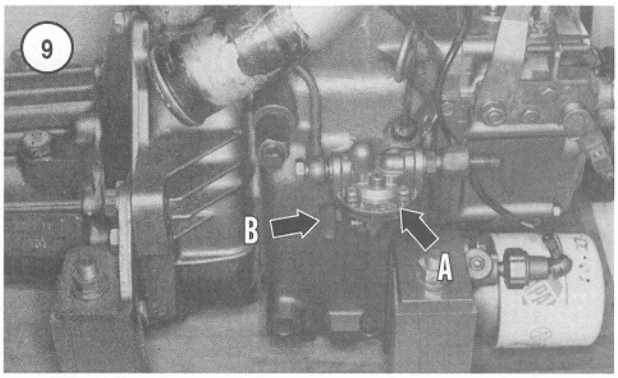

10

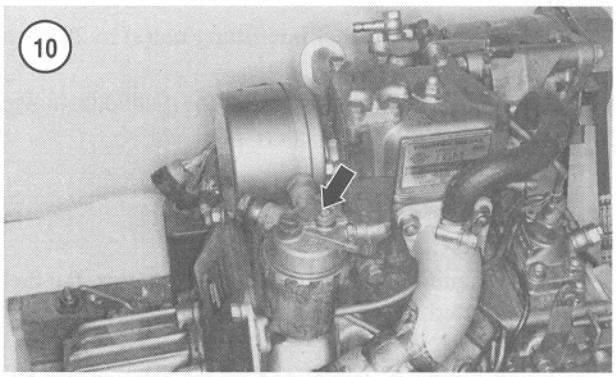

11

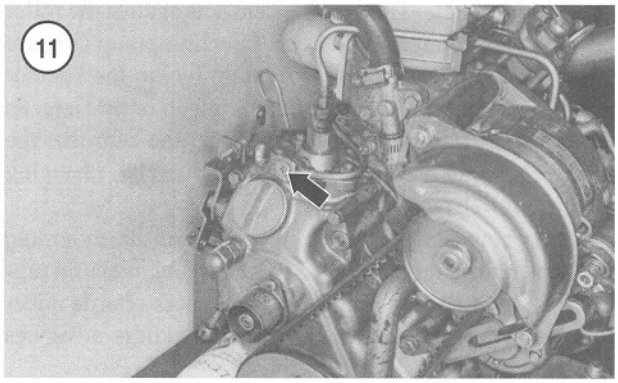

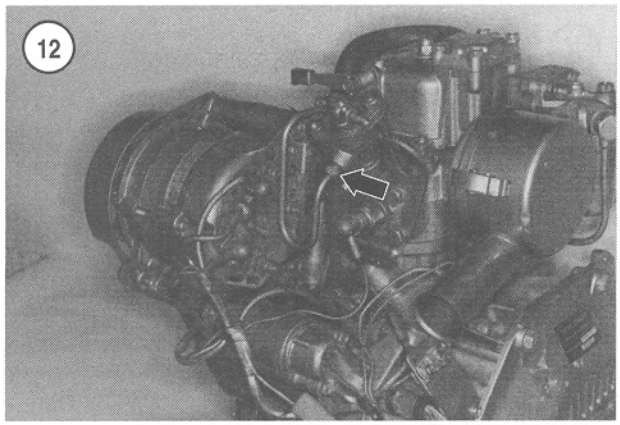

5. Loosen the fitting nut (**Figure 12**) on the injector(s) just enough to expel fuel.
6. Move the engine speed control to the full throttle position.
7. Move the decompression lever to the ON position.

NOTE
Do not operate the starter for more than 30 seconds; otherwise the starter may be damaged due to overheating.

8. Operate the starter until air-free fuel flows from the injector(s).
9. Tighten the injector fuel line fitting nut(s) to 20 N•m (15 ft.-lb.).
10. Operate the starter and listen for the distinctive noise that indicates the injector is operating.

FUEL INJECTION TIMING

Similar to ignition timing on a gasoline engine, the fuel must be injected at the proper time to obtain optimum combustion.

Injection timing is determined by the relationship between the injection pump plunger and the injection camshaft in the engine. The rotating cam acts against the roller on the pump plunger in the fuel injection pump (**Figure 13**) to force up the plunger and pump fuel to the injector nozzle. Moving the fuel injection pump up or down on its mounting surface changes the point on the cam that the plunger begins vertical movement, thereby changing when injection occurs.

Shims between the injection pump and its mounting surface on the engine are used to adjust fuel injection timing (**Figure 13**). Increasing shim thickness retards injection timing, while decreasing shim thickness advances injection timing.

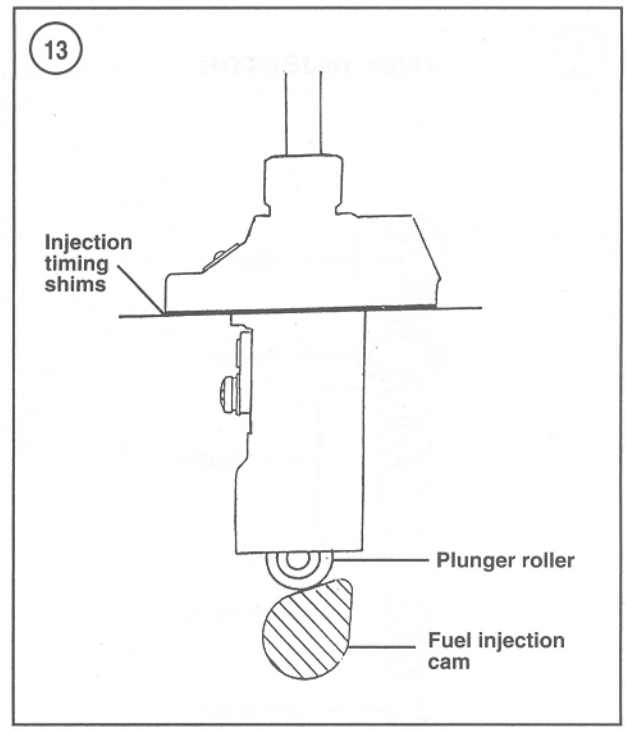

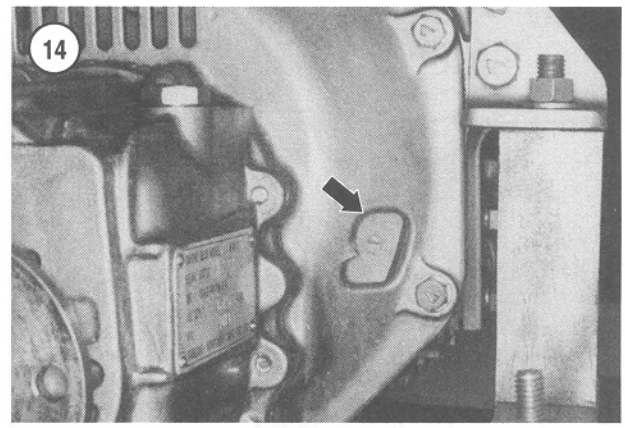

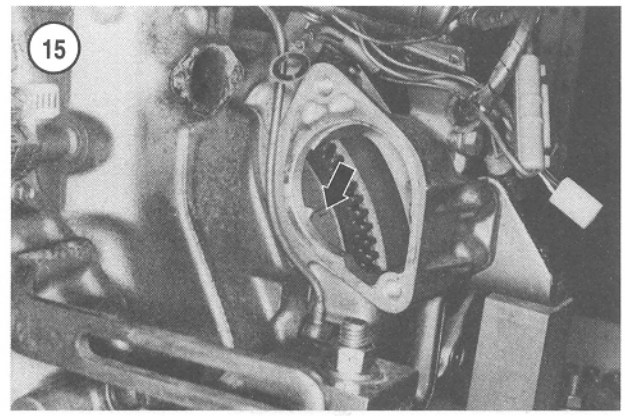

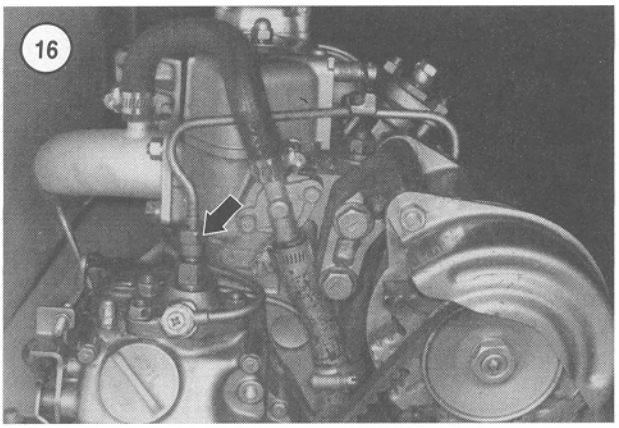

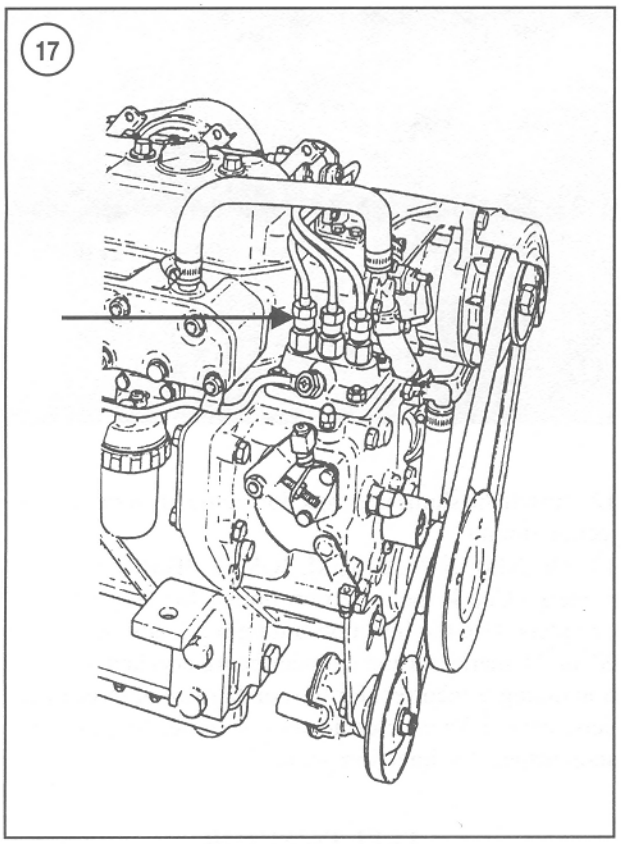

Adjust Fuel Injection Timing

1. Make sure there is no air in the fuel system. If necessary, bleed the fuel system as described in the previous section.

2. If there is no flywheel observation hole in the clutch cover (**Figure 14**), remove the starter motor so the timing marks on the flywheel (**Figure 15**) are visible.

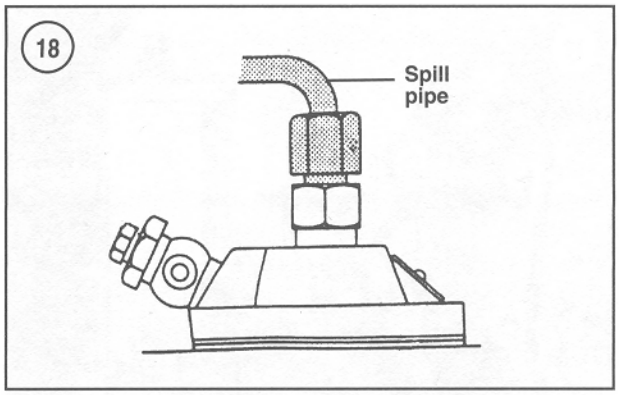

3A. On 1GM and 1GM10 models—Unscrew the fuel injection line retaining nut (**Figure 16**) and disconnect the fuel line from the pump.

NOTE
On 2GM, 2GM20, 3GM, 3GM30, 3HM and 3HM35 engines, the cylinder nearest the flywheel is the number one cylinder.

3B. On 2GM, 2GM20, 3GM, 3GM30, 3HM and 3HM35 models—Unscrew the fuel injection line retaining nut (**Figure 17**) for the number one cylinder fuel injection line, then disconnect the fuel line from the pump.

4. Install a spill pipe on the pump in place of the high-pressure fuel line (**Figure 18**).

NOTE
If a spill pipe is not available or cannot be fabricated, observe fuel flow in the open nipple.

5. Place the speed control lever at the mid-throttle position.

NOTE
Do not use the starter motor when rotating the crankshaft.

NOTE
Always rotate the crankshaft in the normal running direction (clockwise at the crankshaft pulley); otherwise the water pump impeller may be damaged.

6. Rotate the crankshaft with the crankshaft pulley retaining nut until the 1T mark on the flywheel appears.

NOTE
The piston must be on its compression stroke. If fuel does not appear in the spill pipe, the piston may not be on the compres-

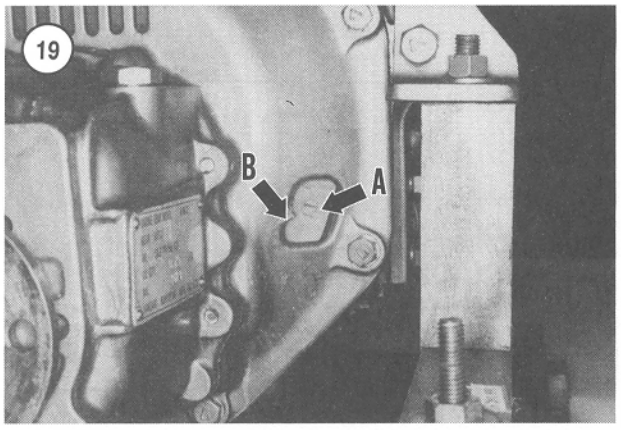

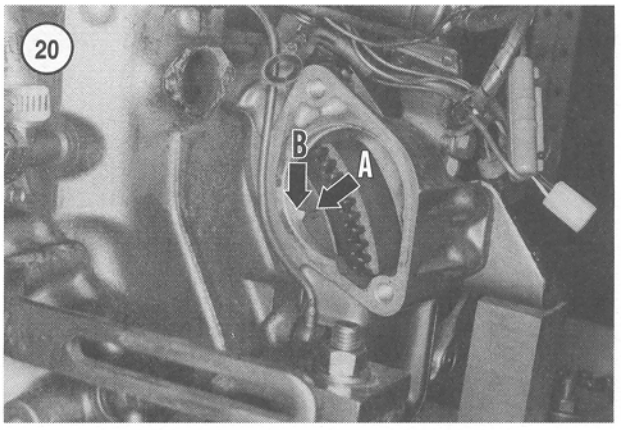

sion stroke. Rotate the crankshaft one full turn.

7. Slowly rotate the crankshaft while observing the fuel in the fuel nipple on the injection pump and the timing marks on the flywheel.
8. When fuel appears in the spill pipe, the injection timing mark on the flywheel (A, **Figure 19**) should align with the reference pointer (B) on the clutch cover. If viewing marks through the starter hole, the injection timing mark on the flywheel (A, **Figure 20**) should align with the reference mark (B) on the clutch cover.

NOTE

There are two timing marks for each cylinder on the flywheel: a mark for top dead center (TDC) and the injection timing mark. The TDC mark is identified by a T next to the mark. Near the TDC mark is another mark, the injection timing mark, which has no identifying letters or numbers. The injection timing mark is to the right of the TDC mark when viewing the mark through the starter hole, or to the left of the TDC mark when viewing the mark through the clutch cover hole.

9. If the injection timing is not correct, remove the fuel injection pump as described in this chapter.
10. Measure the shim pack located between the pump and engine mounting surface (**Figure 21**).

11A. *Injection timing retarded*—If injection timing is retarded, decrease the shim thickness to advance injection timing. Decreasing shim thickness 0.1 mm will advance injection timing one degree.

11B. *Injection timing advanced*—If injection timing is advanced, increase the shim thickness to retard injection timing. Increasing shim thickness 0.1 mm will retard injection timing one degree.

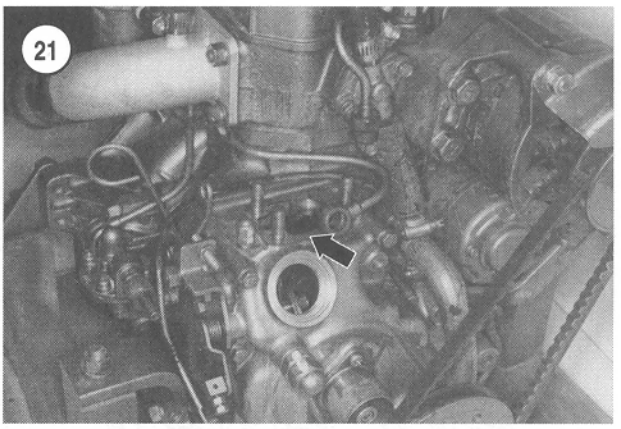

12. Install the shims and injection pump, then recheck injection timing.
13. On 2GM, 2GM20, 3GM, 3GM30, 3HM and 3HM35 models—Check fuel injection timing for the remaining cylinders. Use the injection timing mark adjacent to the 2T or 3T marks for the cylinder being checked. If injection timing is incorrect for the number two or three cylinders, have a Yanmar dealership or diesel fuel injection shop inspect the injection pump.

FUEL INJECTOR

Each cylinder is equipped with a fuel injector (**Figure 22**). Refer to *Fuel Injector* in the *Fuel Injection Fundamentals* section of this chapter for information regarding fuel injector operation.

Maintaining optimum fuel injector performance is primarily dependent on using clean fuel. Dirt or debris in the fuel is the predominant cause of poor injector performance. The injector is also subject to the heat and byproducts of combustion. The fuel injector nozzle is protected from combustion heat by a heat shield. However, heat and

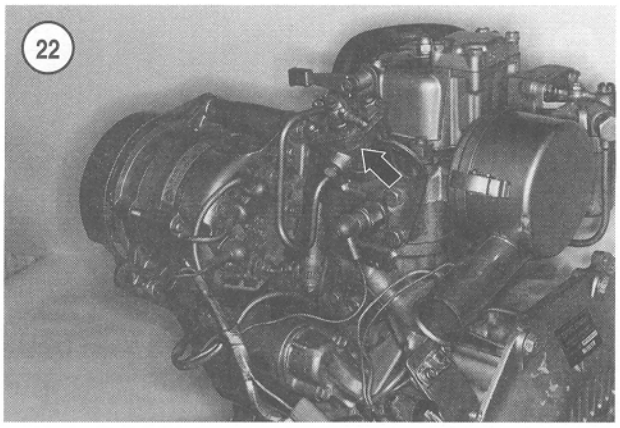

22

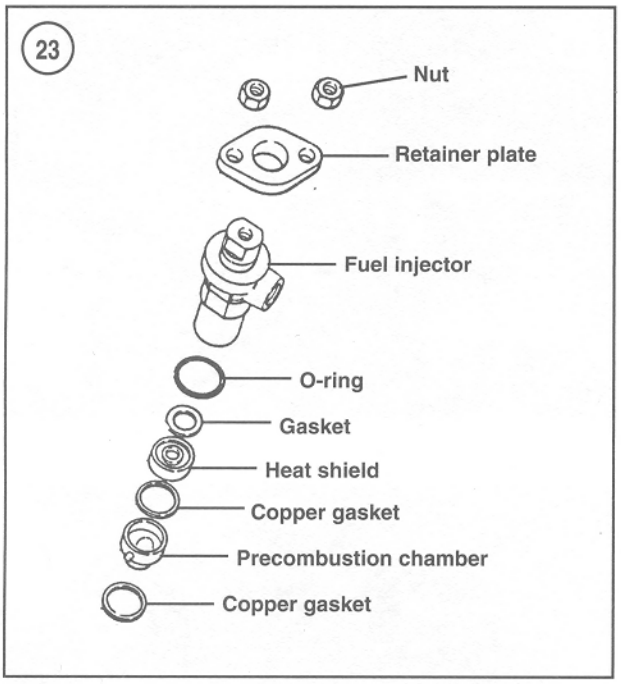

23

combustion byproducts eventually affect injector operation. Clogging may affect the spray pattern, which may cause misfiring and decreased engine performance. Yanmar does not specify when a fuel injector should be removed for cleaning. A periodic maintenance schedule can be formulated based on when engine performance declines due to the injector becoming clogged. An injector should perform properly for several hundred hours before requiring service; otherwise, operating procedures, fuel type or condition, or another engine problem are responsible for unsatisfactory injector operation.

Injector service should be limited to removal for external cleaning. Have a Yanmar dealership or diesel fuel injection shop perform internal cleaning or overhaul.

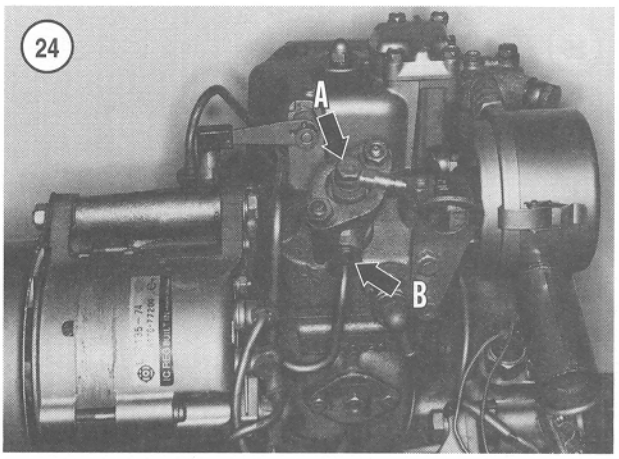

24

7

Removal and Installation

Refer to **Figure 23** for an exploded view of the fuel injector and precombustion chamber assembly.

1. Thoroughly clean the fuel injector and the area around the injector to make sure debris will not fall into the engine.

NOTE
Plug or cap all fuel openings to prevent the entrance of dirt or debris.

NOTE
Note the location of all washers so they can be returned to their original positions.

2. Detach the fuel return line from the nipple on the fuel injector. On multicylinder engines, the fuel return line must be removed from all injectors. Hold the injector and remove the fuel return line nut (A, **Figure 24**) and return line fitting.

3. If necessary, unscrew the fuel line retaining brackets. Detach the high-pressure fuel line (B, **Figure 24**) from the fuel injector.

4. Unscrew the retainer plate nuts (A, **Figure 25**), then remove the retainer plate (B).

5. Remove the fuel injector (**Figure 26**).

6. Extract the heat shield and gasket (**Figure 27**). The gasket resides in a groove in the top of the heat shield.

NOTE
Do not damage the precombustion chamber when removing it in Step 7 if it is tight in the cylinder head. If necessary, remove the cylinder head to dislodge the precombustion chamber.

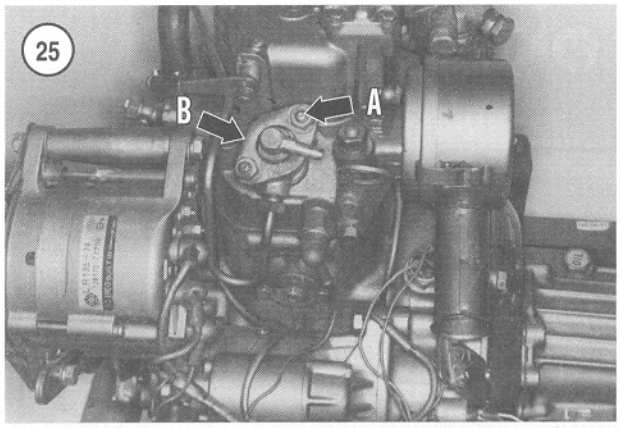

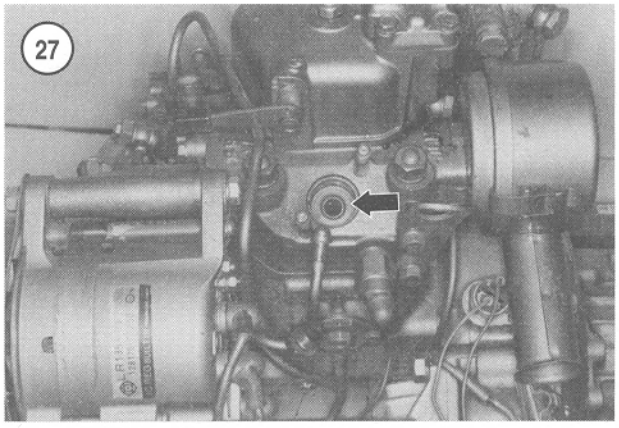

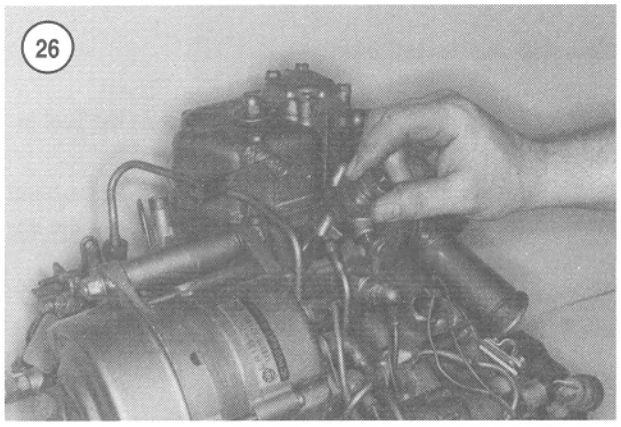

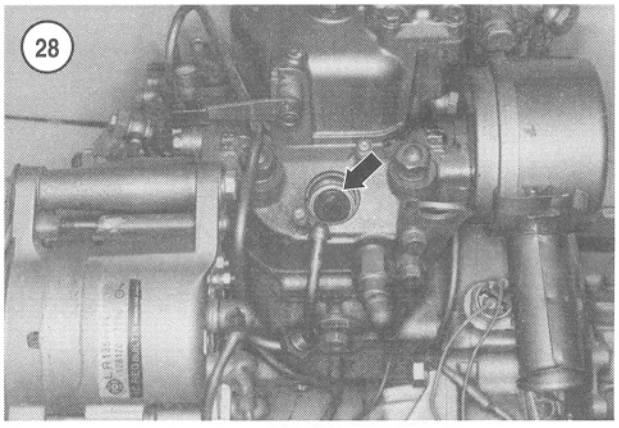

7. Extract the precombustion chamber and copper gaskets (**Figure 28**). Note that there is a copper gasket (**Figure 29**) above and below the chamber; make sure to remove the bottom gasket after removing the chamber.

8. On models so equipped, remove and discard the O-ring on the fuel injector (**Figure 23**).

9. Plug the opening in the cylinder head to prevent the entry of dirt or debris.

10. Refer to the following section for injector testing and cleaning information.

11. Inspect the precombustion chamber. If damaged, discard the chamber. Clean the heat shield.

12. Discard the gaskets and install new gaskets. Thoroughly remove any gasket residue in the top of the heat shield.

13. Install the bottom copper gasket in the injector bore in the cylinder head.

14. Install the precombustion chamber with the holes toward the cylinder head. Align the pin on the side of the precombustion chamber (**Figure 30**) with the groove in the injector bore (**Figure 31**).

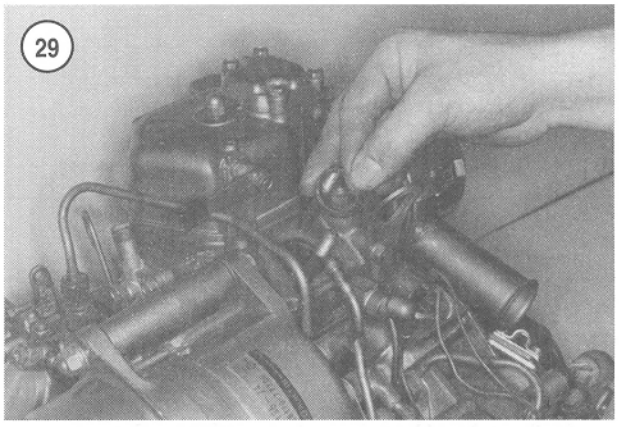

15. Install the upper copper gasket onto the precombustion chamber.

16. Install the heat shield and gasket. The open side of the heat shield must be down.

17. Install the O-ring onto the fuel injector (**Figure 29**).

18. Install the fuel injector into the injector bore in the cylinder head (**Figure 26**).

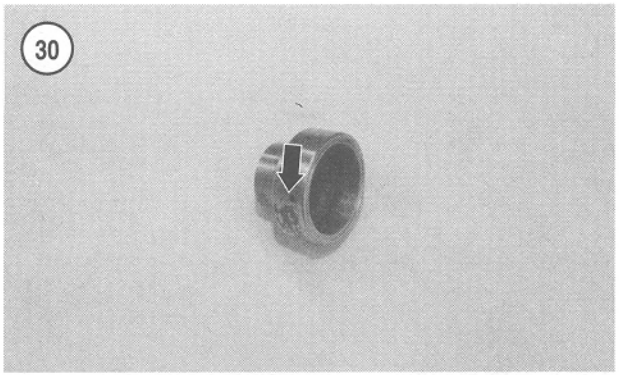

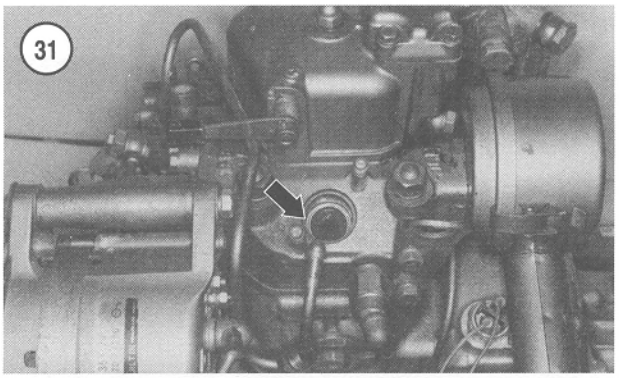

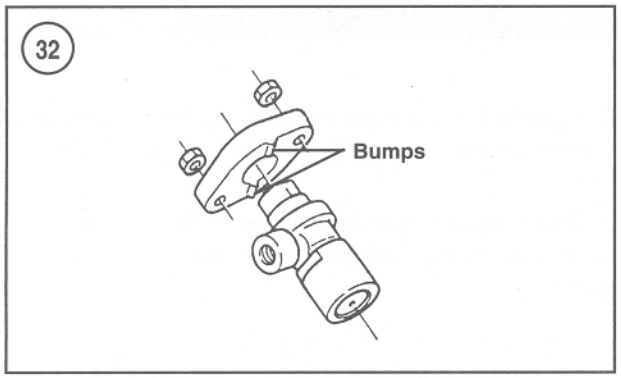

19. Connect the high-pressure fuel line to the injector.

20. Install the retainer plate so the side with bumps (**Figure 32**) is down and contacts the injector.

21. Install the retaining nuts. Tighten the nuts evenly to 20 N•m (14.5 ft.-lb.).

22. Connect the fuel return line.

23. Reattach fuel line retaining brackets.

24. Bleed the fuel injection system as described in this chapter. Run the engine and check for leaks.

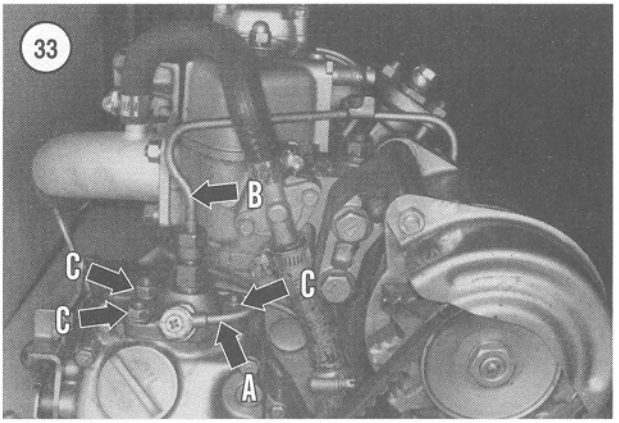

FUEL INJECTION PUMP

The fuel injection pump is built to precise specifications and is easily damaged by contamination from dirt or debris. Due to the close tolerances in the pump and the special tools and equipment required for overhaul and testing, have a Yanmar dealership or diesel fuel injection shop perform any unnecessary service.

Removal and Installation

WARNING

Serious fire hazards always exist around diesel fuel. Do not allow any smoking in areas where fuel is present. Always have a fire extinguisher, rated for fuel and electrical fires, on hand when servicing any part of the fuel system.

1. Close the fuel shutoff valve.
2. Thoroughly clean the fuel injection pump and the area around the pump of all debris.

NOTE

Plug or cap all fuel openings to prevent the entrance of debris.

3. Detach the fuel supply line from the fuel injection pump (A, **Figure 33**).
4. Unscrew the fuel line retaining brackets. Remove the fuel injection line(s) between the fuel injection pump and fuel injector(s) (B, **Figure 33**).
5. Remove the injection pump retaining nuts (C, **Figure 33**).

NOTE

Removing the oil fill cap on 1GM and 1GM10 models provides access to the gov-

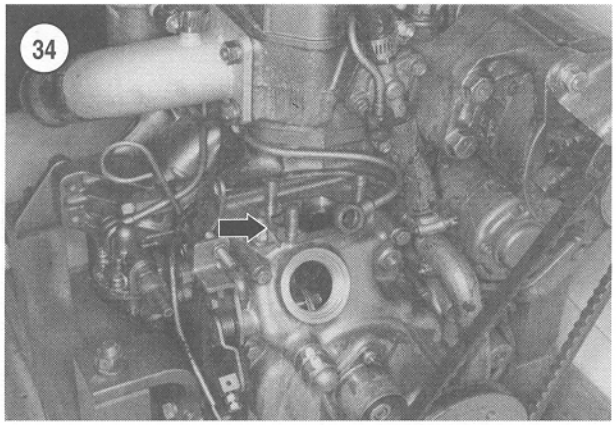

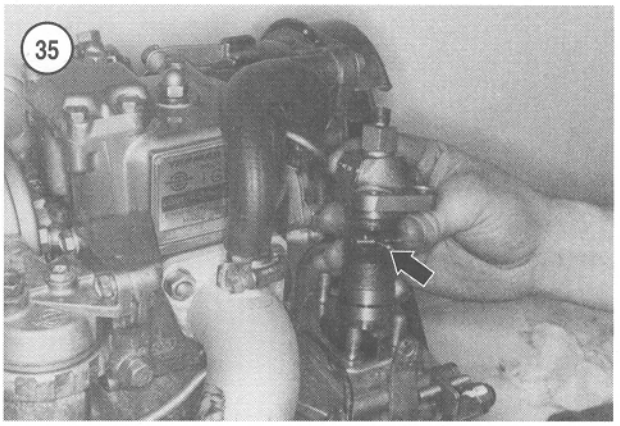

ernor linkage for easier pump removal and installation.

6. Lift the injection pump out of the engine while carefully disengaging the governor linkage from the pump.
7. Remove the timing shims (**Figure 34**) and set them aside for reinstallation.
8. To reinstall the injection pump, reverse the removal procedure. Make sure to reinstall the timing shims and engage the control rack pin (**Figure 35**) with the governor lever fork. Tighten the pump retaining nuts to 25 N•m (18 ft.-lb.). Bleed the fuel injection system as previously described. Run the engine and check for leaks.

FUEL TRANSFER PUMP

The engine is equipped with a fuel transfer pump (A, **Figure 36**) to move fuel from the fuel tank to the fuel filter and fuel injection pump. A cam lobe on the engine camshaft operates the pump lever (**Figure 37**), which moves the fuel pump diaphragm to pump the fuel. Fuel pump pressure is approximately 9.7 kPa (1.4 psi).

The transfer pump output port on 1GM and 1GM10 engines is on the left side with the pump mounted on the engine. On all other engines, the output port is on the right side.

Fuel Pump Testing

WARNING
Always have a fire extinguisher, rated for fuel and electrical fires, on hand when servicing any part of the fuel system. Clean up any spilled fuel as soon as possible.

1. Loosen the air bleed screw (**Figure 38**) on the fuel filter.

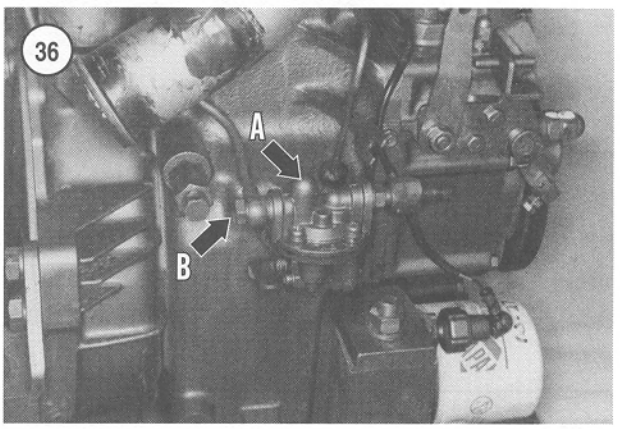

2. Operate the engine starter. If the fuel transfer pump is operating properly, fuel will flow from the air bleed screw hole.
3. If fuel does not flow from the air bleed screw hole, disconnect the output fuel line (B, **Figure 36**) from the fuel pump.

NOTE
Be prepared to catch fuel expelled from the pump.

4. Operate the engine starter. If fuel does not flow from the fuel pump, replace the pump.

Removal and Installation

1. Close the fuel tank valve.

NOTE
Account for the sealing washers on the fuel hose ends.

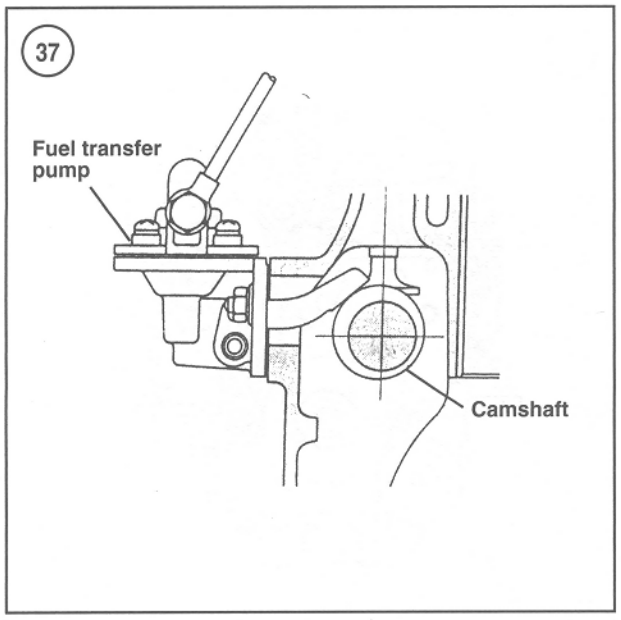

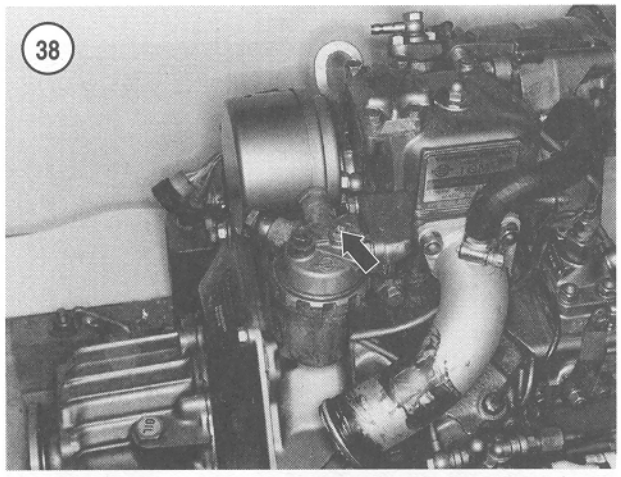

2. Disconnect the fuel lines (A, **Figure 39**) from the fuel transfer pump.
3. Remove the fuel pump retaining bolts (B, **Figure 39**), and then remove the pump.
4. Clean any gasket material from the engine and the fuel pump.
5. Reverse the removal procedure to install the fuel transfer pump. Bleed the fuel injection system as described in this chapter.

NOTE
The transfer pump output port on 1GM and 1GM10 engines is on the left side with the pump mounted on the engine. On all other engines, the output port is on the right side.

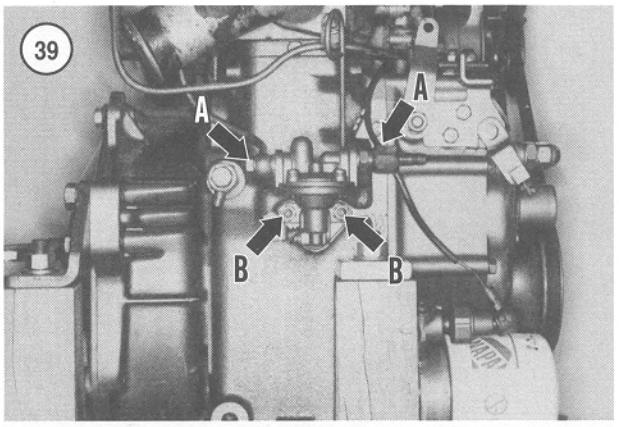

Overhaul

Internal parts for the fuel transfer pump are not available. Replace a defective pump; do not attempt to overhaul it.

FUEL LINES

The fuel system utilizes both rubber and steel lines. When replacing fuel lines, use only lines recommended by the manufacturer or a diesel engine shop. Purchase the formed steel fuel lines from a Yanmar dealership. If necessary, a diesel fuel injection shop can fabricate fuel lines. All lines must be secured by brackets to prevent fractures or splitting due to vibration.

Inspection

Periodically inspect the fuel lines for leaks and damage, such as dented or bent steel lines, or cut or abraded rubber lines. Leaks may be due to loose fittings or damage. Tighten loose fittings and recheck the leak after operating the engine. Do not overtighten a fitting to try to stop a leak; overtightening may damage the fitting threads or the fuel line sealing surfaces. If tightening does not stop the leak, disassemble the fuel line and inspect the line and seat to determine the cause of the leak. If sealing surfaces are damaged, replace the fuel line and, if necessary, the fuel fitting or component.

NOTE
Always operate the engine and check for leaks after reconnecting the fuel lines.

Fuel lines with banjo fittings (A, **Figure 40**) are equipped with copper sealing washers (B) on *both* sides of the fitting. Copper washers harden with age and will not

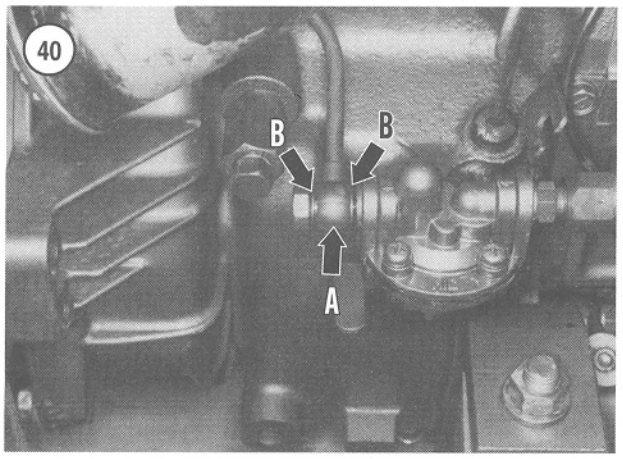

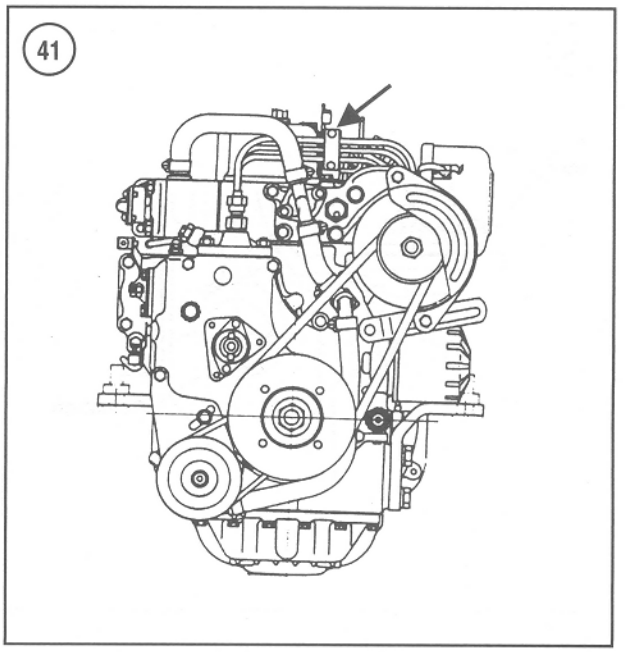

seal properly if reused. Always install *new* washers when reconnecting a fitting.

The fuel lines are secured with brackets to prevent leaks due to engine vibration. Periodically check that fuel lines are properly secured with brackets. The high-pressure fuel injection lines are held by a rubber pad in the bracket (**Figure 41**). Replace any rubber pads that are missing or no longer holding the line securely.

GOVERNOR SYSTEM

Operation

The governor components are in the timing gearcase (**Figure 42**, typical). The purpose of the governor system is to maintain engine speed regardless of the load imposed.

The mechanical governor system utilizes centrifugal force to monitor and adjust engine speed. Refer to **Figure 43, Figure 44** and **Figure 45**. A set of flyweights are mounted on the crankshaft. When engine speed increases, the flyweights are thrown out. When engine speed decreases, the flyweights recede. Trapped between the flyweights is a flanged sleeve that moves in and out with the flyweights, pushing against a forked governor arm. The forked governor arm transfers motion to the governor lever, which is connected to the fuel injection pump fuel control rack. The governor spring tension forces the speed control lever against the governor lever, which forces the injection pump speed control rack to the full open throttle position. When load on the engine increases and engine speed decreases, the governor sleeve is withdrawn, which through the linkage moves the speed control rack to increase fuel injection. When load on the engine decreases and engine speed increases, the governor sleeve extends, which moves the linkage to overcome governor spring

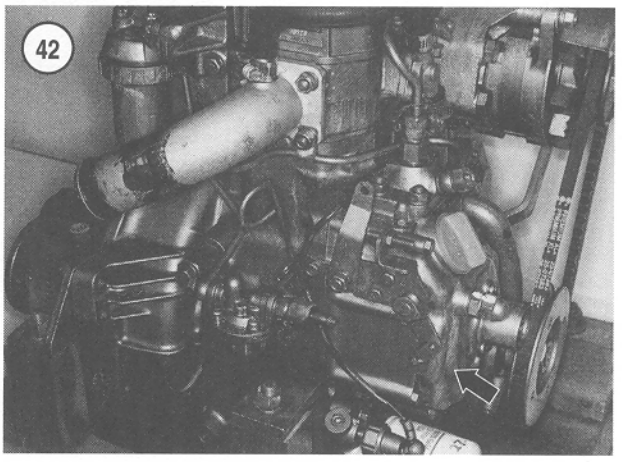

tension. The linkage moves the speed control rack and decreases fuel injection.

The governor controls engine speed in an operating range between idle speed and maximum governed speed. Maximum governed speed is critical as it sets the upper limit of engine operation. Exceeding the maximum governed speed can cause overspeeding, which may result in engine failure.

A fuel limiter screw sets maximum injection pump fuel delivery. When the governor senses a decrease in engine speed, the fuel control rack moves to the full fuel position. The factory-adjusted fuel limiter screw stops the governor linkage at a point that provides maximum, but not excessive, fuel delivery to the engine.

43

GOVERNOR SYSTEM OPERATION

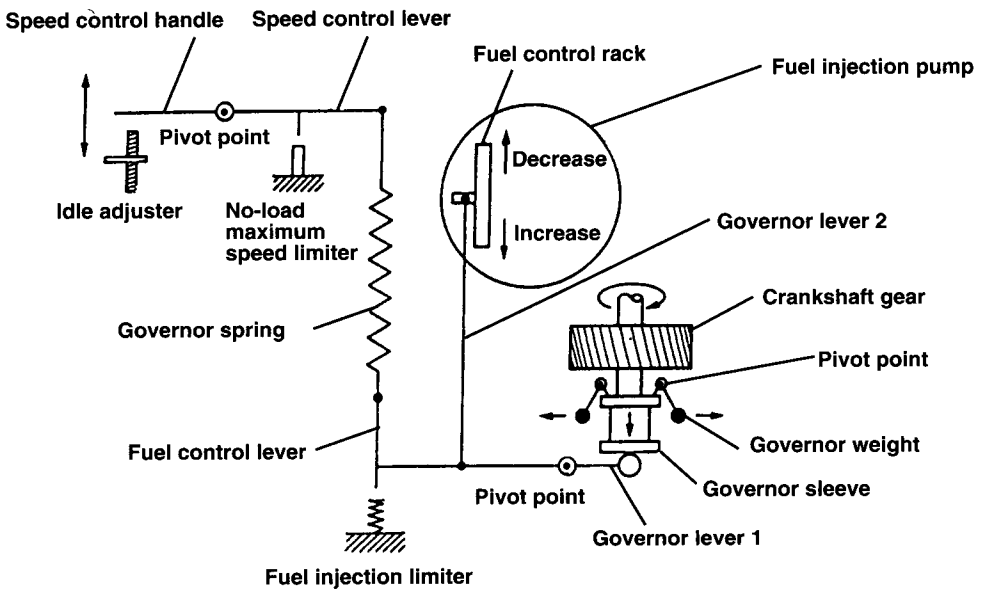

44

GOVERNOR SYSTEM

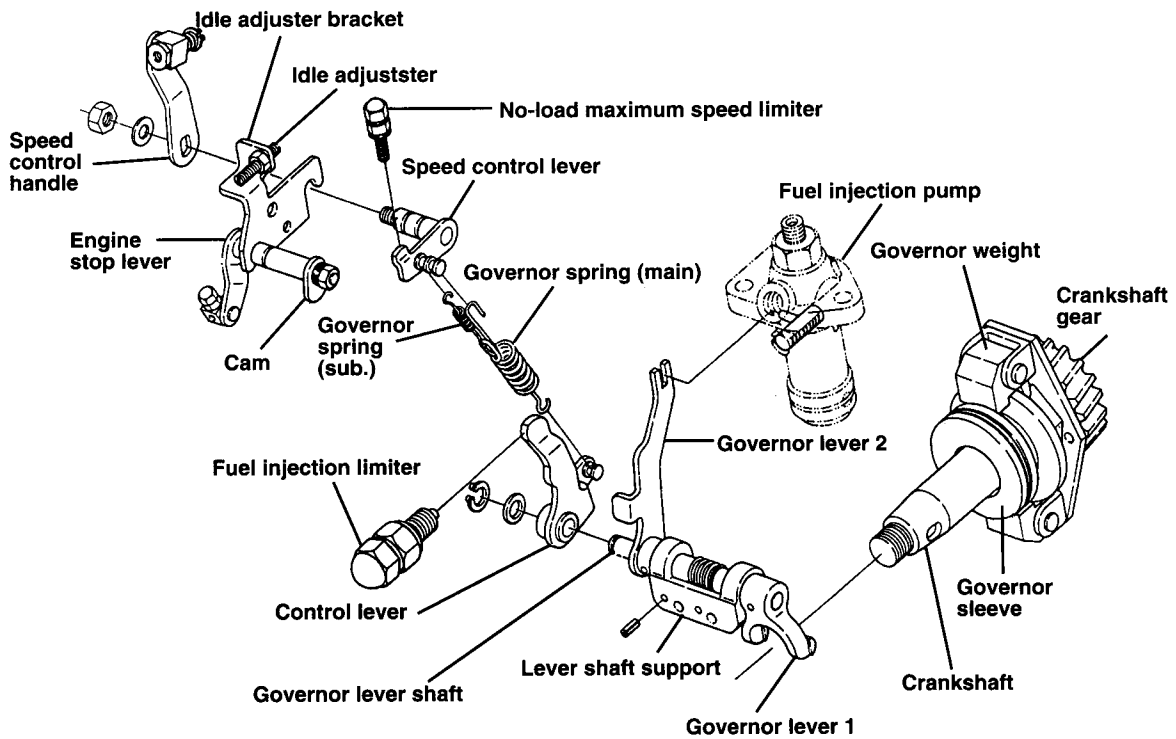

7

45

GOVERNOR SYSTEM

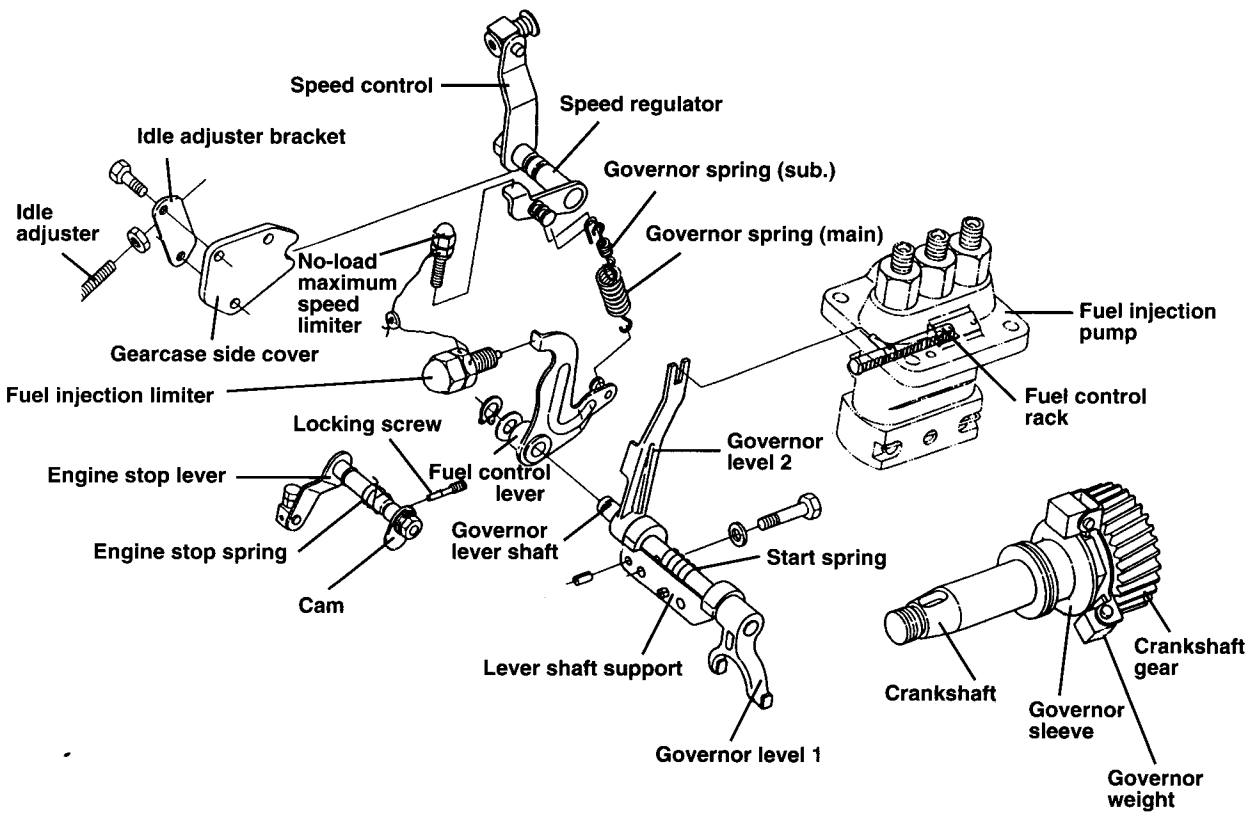

Adjustments

Yanmar recommends that only idle speed adjustment should be performed by non-authorized service technicians. Refer to Chapter Three for the idle speed procedure.

Other adjustments, such as no-load maximum governed speed and fuel limiter screw setting, are set by the manufacturer. Incorrect adjustment can damage the engine. To prevent tampering, a safety wire is attached to each screw and a lead seal is affixed to the wire or the screw assembly is marked (**Figure 46**). Removing or cutting the wire or seal or altering the marked screw position will void the engine warranty.