LOA	28'7"
LWL	22'10"
BEAM	9'0"
DRAFT	3'6"
BALLAST	1850#
DISP	5000#
E	10'10"
J	9'6"
P	30'6"
I	29'8 3/4"
MH FROM DWL	40'3"
RATED SAIL AREA	309 SQ FT ● 100% FORETRIANGLE
MAIN SAIL AREA	165.2 SQ FT
FORETRIANGLE AREA	143.8 SQ FT
110% JIB	166.2 SQ FT
DACRON SAIL CLOTH	5.25 OZ/YD (MAIN) 4.60 OZ/YD (JIB)

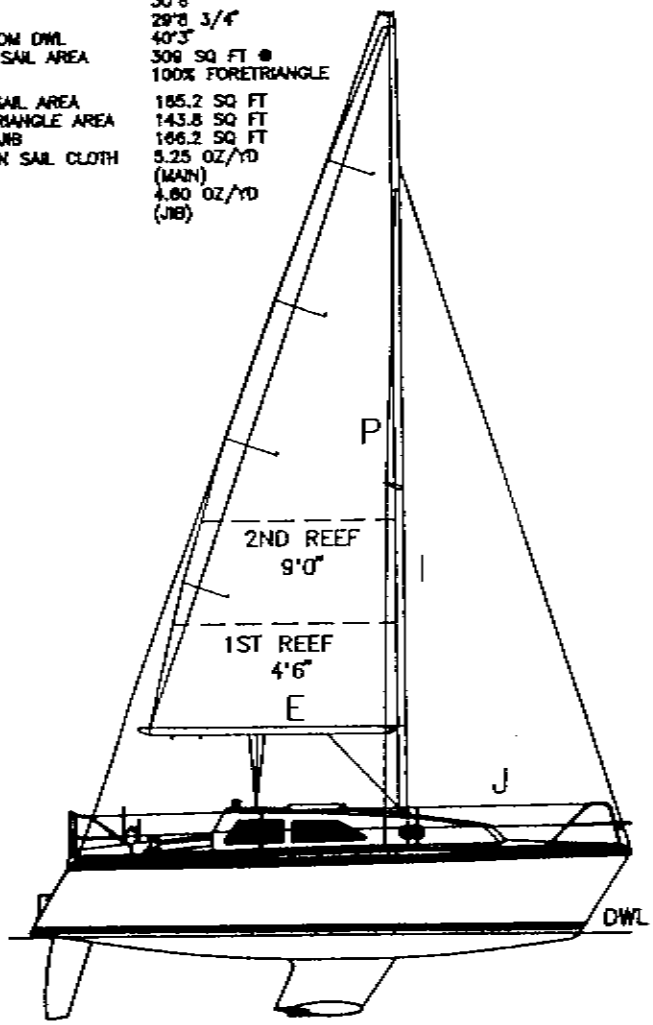

HUNTER H27 SAIL PLAN H262620A

(2)

HUNTER H27 INTERIOR PLAN H262621A

HUNTER H27 DIESEL FUEL SYSTEM H262629A

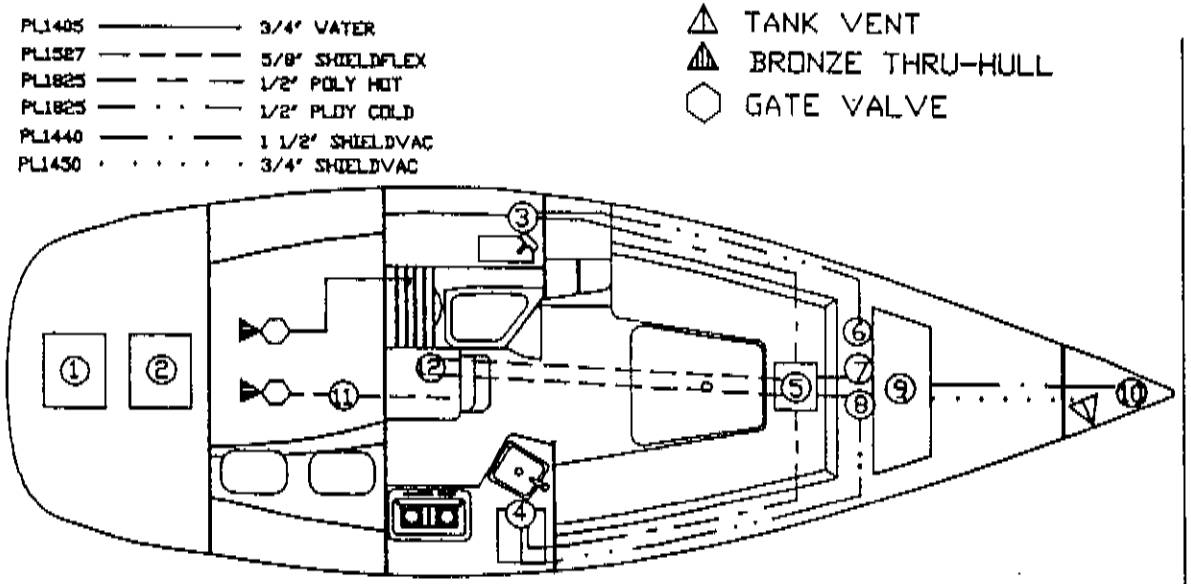
PL1405 3/4" WATER
PL1527 5/8" SHIELDFLEX
PL1825 1/2" POLY HOT
PL1825 1/2" PLOY COLD
PL1440 1 1/2" SHIELDVAC
PL1450 3/4" SHIELDVAC
TANK VENT
BRONZE THRU-HULL
GATE VALVE
① WASTE TANK
② FUEL TANK
③ VANITY FAUCET
④ GALLEY FAUCET
⑤ WATER HEATER
⑥ PUMP STRAINER
⑦ PRESSURIZED WATER PUMP
⑧ TANK FITTING
⑨ WATER TANK
⑩ TANK FILL
⑪ ENGINE STRAINER
⑫ HEAT EXCHANGER
HUNTER
H27 SUPPLY WATER SYSTEM H26062A

(7)

HUNTER H27 OUTBD. SUPPLY WATER SYS.
H262632A

HUNTER H27 WASTE WATER SYSTEM H26868BA

Hun 17 (16)

HUNTER AUTO BILGE PUMP LAYOUT GEN2617A

COPY

SINGLE LIGHT - EL0345
SWIVEL LIGHT - EL0347
STERN LIGHT - EL0390
BOW LIGHT - STB'D - EL0365
BOW LIGHT - PORT - EL0366
EL0720 - 16GA. BLUE ---- CABIN
EL0750 - 16GA. BLK. ..... COMMON
EL0760 - 16GA. WHT. ——— NAVIGATION
EL0580 - 14/2. GY —— — COMPASS
HUNTER
H27 HEADLINER SCHEMATIC
H272617A

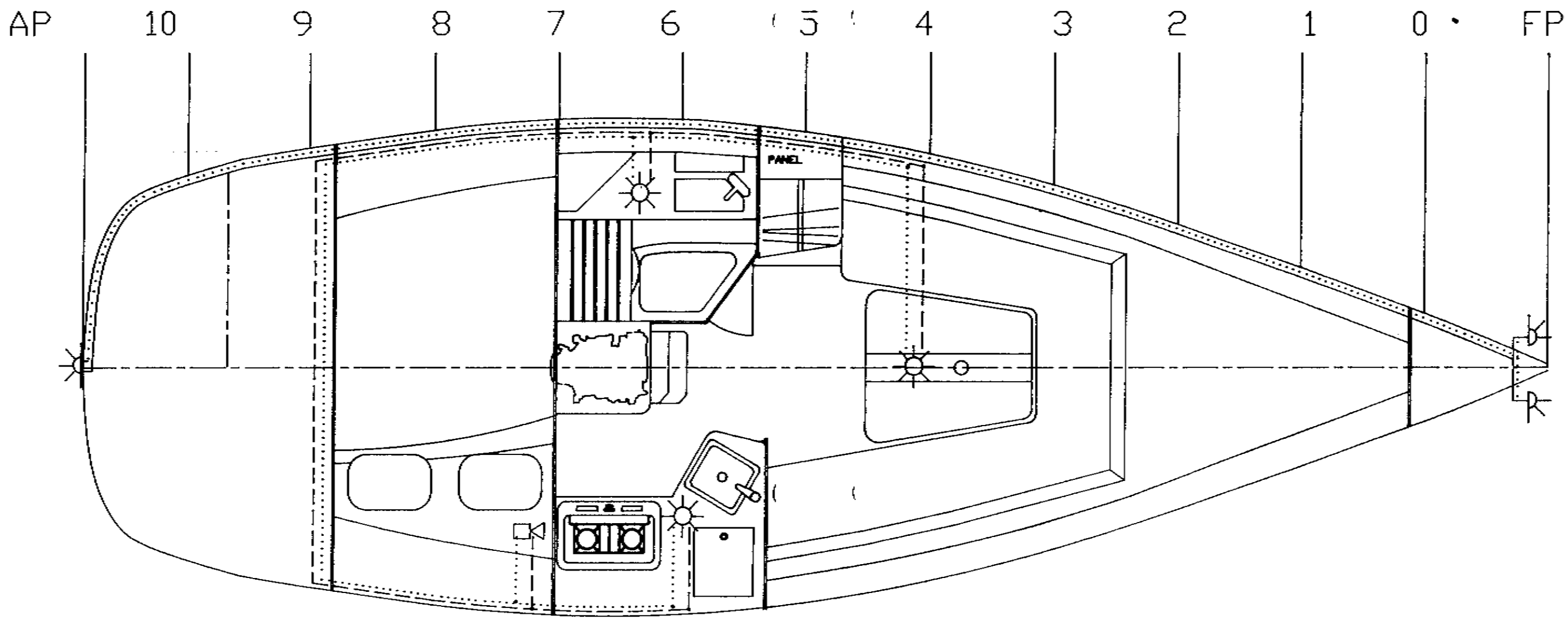

SINGLE LIGHT - EL0345

SWIVEL LIGHT - EL0347

STERN LIGHT - EL0390

BOW LIGHT - STB'D - EL0365

BOW LIGHT - PORT - EL0366

EL0720 - 16GA. BLUE ---------- CABIN

EL0750 - 16GA. BLK ..... COMMON

EL0760 - 16GA. WHT ———— NAVIGATION

EL0580 - 14/2. GY — — — — — COMPASS

HUNTER MARINE CORP.
ALACHUA, FL.

DRAWING TITLE: HUNTER 27 - HEADLINER SCHEMATIC			
CHECKED	DRAWN BY: BRIAN	DATE: 1-10-89	SCALE: 1/2"=1'-0"
MAT'L	H26 1800 FILE	DRAWING NO.	DE-01-00-01

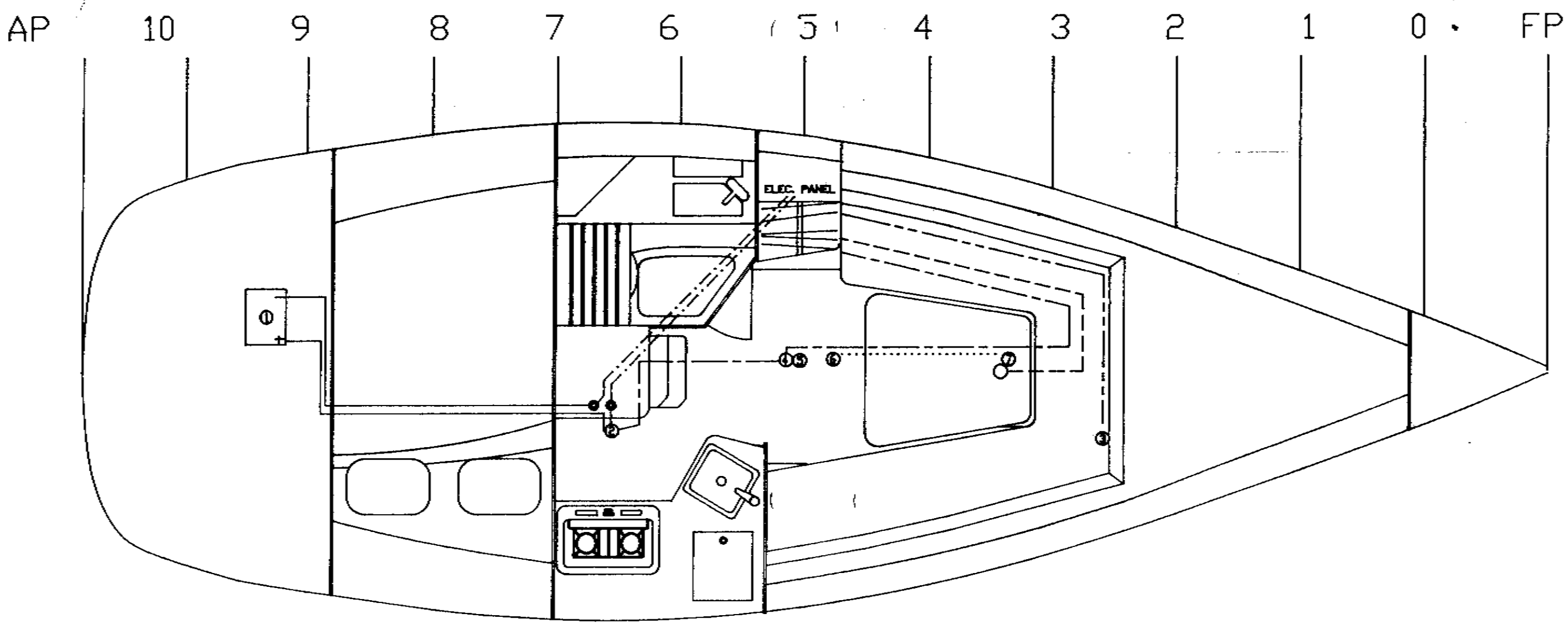

① BATTERY-72AMP
② SELECTOR SWITCH
③ WATER PUMP
④ FLOAT SWITCH
⑤ BILGE PUMP
⑥ GROUNDING PLATE
⑦ MAST POST

1/0 BATTERY CABLE
16GA. WIRE (MAST LIGHTS)
12GA. WIRE (BILGE PUMP)
10GA. WIRE (PANEL FEED)
8GA. WIRE (MAST & CHPL GROUND)
12GA. WIRE (WATER PUMP)

HUNTER MARINE CORP.
ALACHUA, FL.

DRAWING TITLE: HUNTER 26 - PAN SCHEMATIC			
CHECKED	DRAWN BY: BRIAN	DATE: 1-10-89	SCALE: 1/2"=1'-0"
MAT'L	H26 1800 FILE	DRAWING NO.	D-E-02-00-01

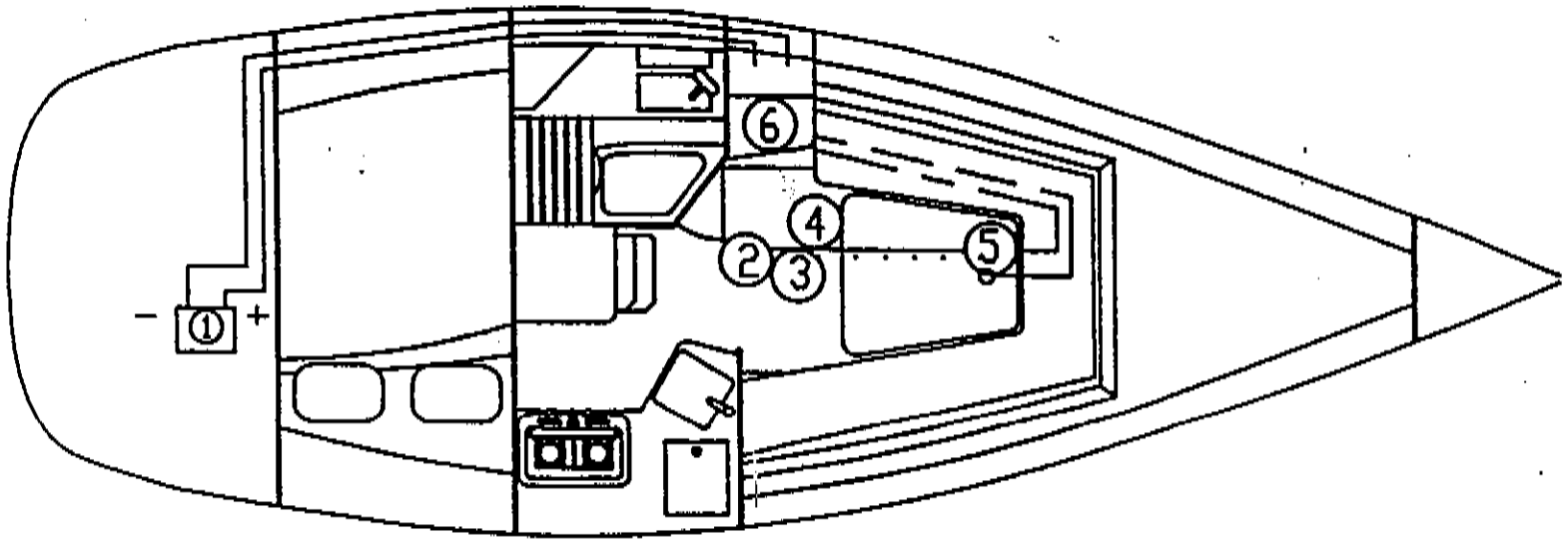

①BATTERY-72AMP
②FLOAT SWITCH
③BILGE PUMP
④GROUNDING PLATE
⑤MAST POST
⑥INSTRUMENT PANEL

1/0 BATTERY CABLE
16GA. WIRE (MAST LIGHTS)
12GA. WIRE (BILGE PUMP)
10GA. WIRE (PANEL FEED)
8GA. WIRE (MAST & CHPL GROUND)
12GA. WIRE (WATER PUMP)

HUNTER H27 OUTBD. THRU-HULL SCH.

H262630A

HUNTER H27 110V SCHEMATIC H272619A

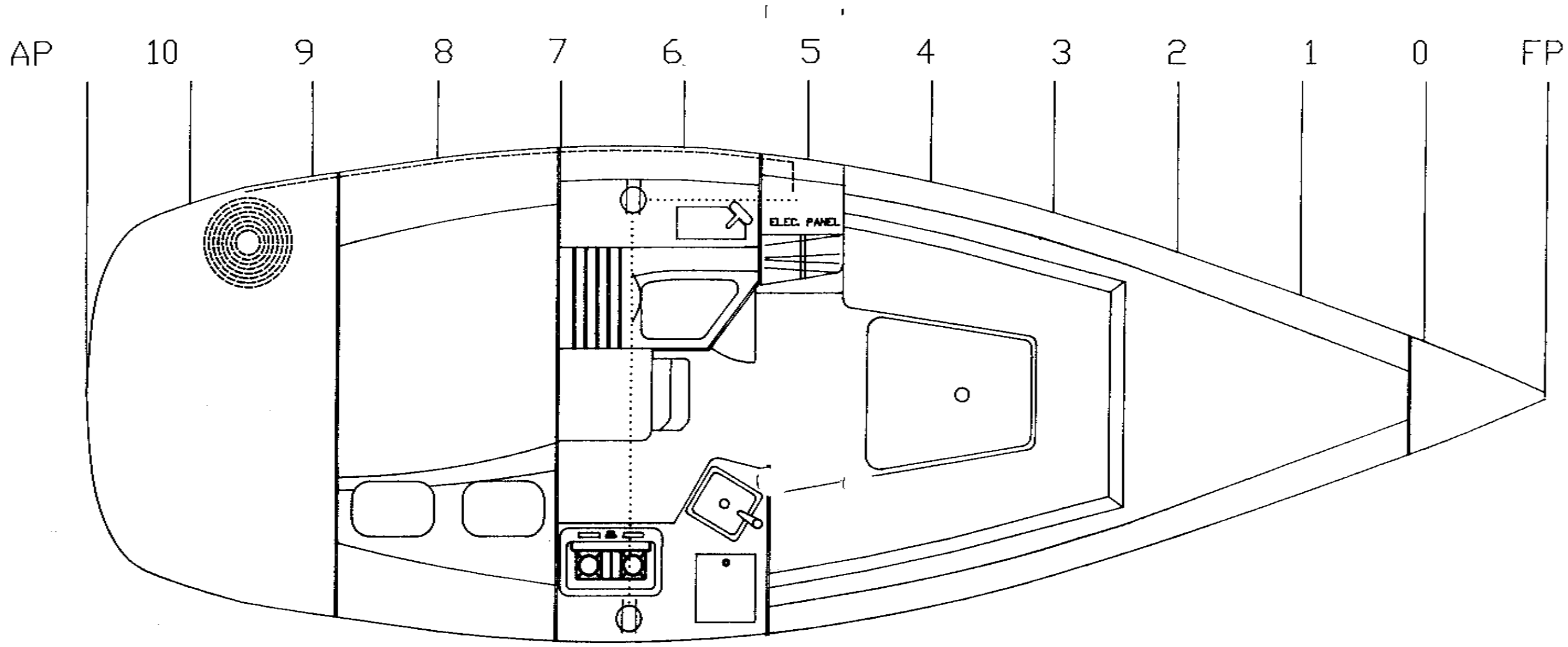

KEY

EL0560-14/3BC

LG0103 - MARINECO

EL0060 - RECEPTACLES

HUNTER MARINE CORP. ALACHUA, FL.			
DRAWING TITLE HUNTER 26 - 110V SCHEMATIC			
CHECKED	DRAWN BY GENE	DATE 1-10-89	SCALE 1/2"=1'-0"
MAT'L	H26 1800 FILE	DRAWING NO.	0E-03-00-01

1

STEP ONE: USE THE PLASTIC CABLE GUIDE (INCLUDED) AS A TEMPLATE TO MARK (6) HOLES ONTO THE TRANSOME. USE THESE HOLES FOR LOCATING THE SLOT.

STEP TWO: DRILL AND CUT A 1/2" x 3" SLOT THROUGH THE TRANSOM. THE PLASTIC TEMPLATE SHOULD COVER THE SLOT COMPLETELY AND ALLOW ACCESS THROUGH THE TEMPLATE AND TRANSOME.

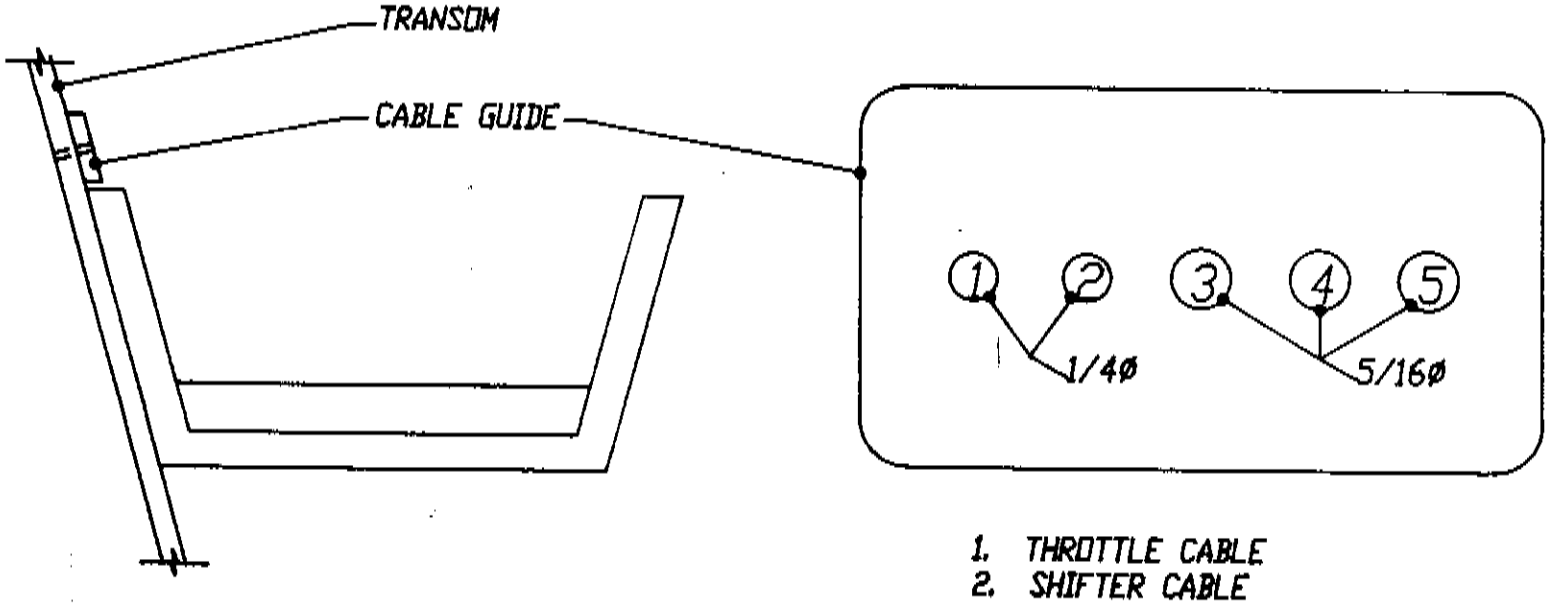

1. THROTTLE CABLE
2. SHIFTER CABLE
3. WIRING HARNESS
4. BATTERY CABLE
5. BATTERY CABLE

NOTE: DO NOT MOUNT THE PLASTIC GUIDE AT THIS TIME. ALL WIRES AND CABLES MUST BE ROUTED BEFORE THE PLASTIC GUIDE IS INSTALLED.

HUNTER

HUNTER 27 OUTBOARD ENGINE MOUNT H27A2608

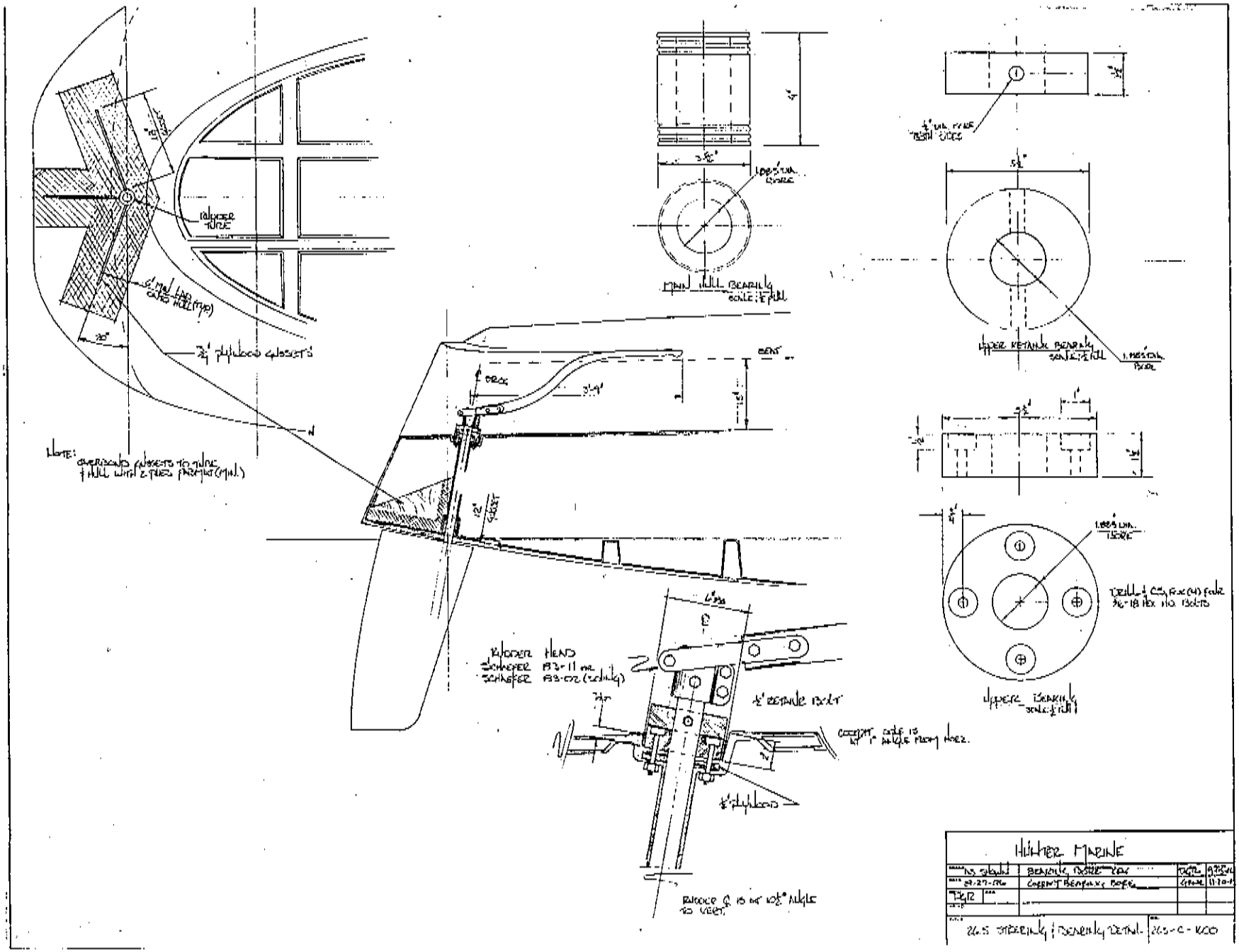
Hunter Marine
Main Hull Bearing
Upper Rudder Bearing
Upper Bearing
Rudder Head
Rudder ℄ 15 mm 10½° Angle to Vert.
Drill & Cs. Flux (4) Fore 3/8-18 Hex Hd. Bolts
Plywood Gussets
Note: Overboard Gusset to Mine Hull with 2-Tree Fastener (Typ.)

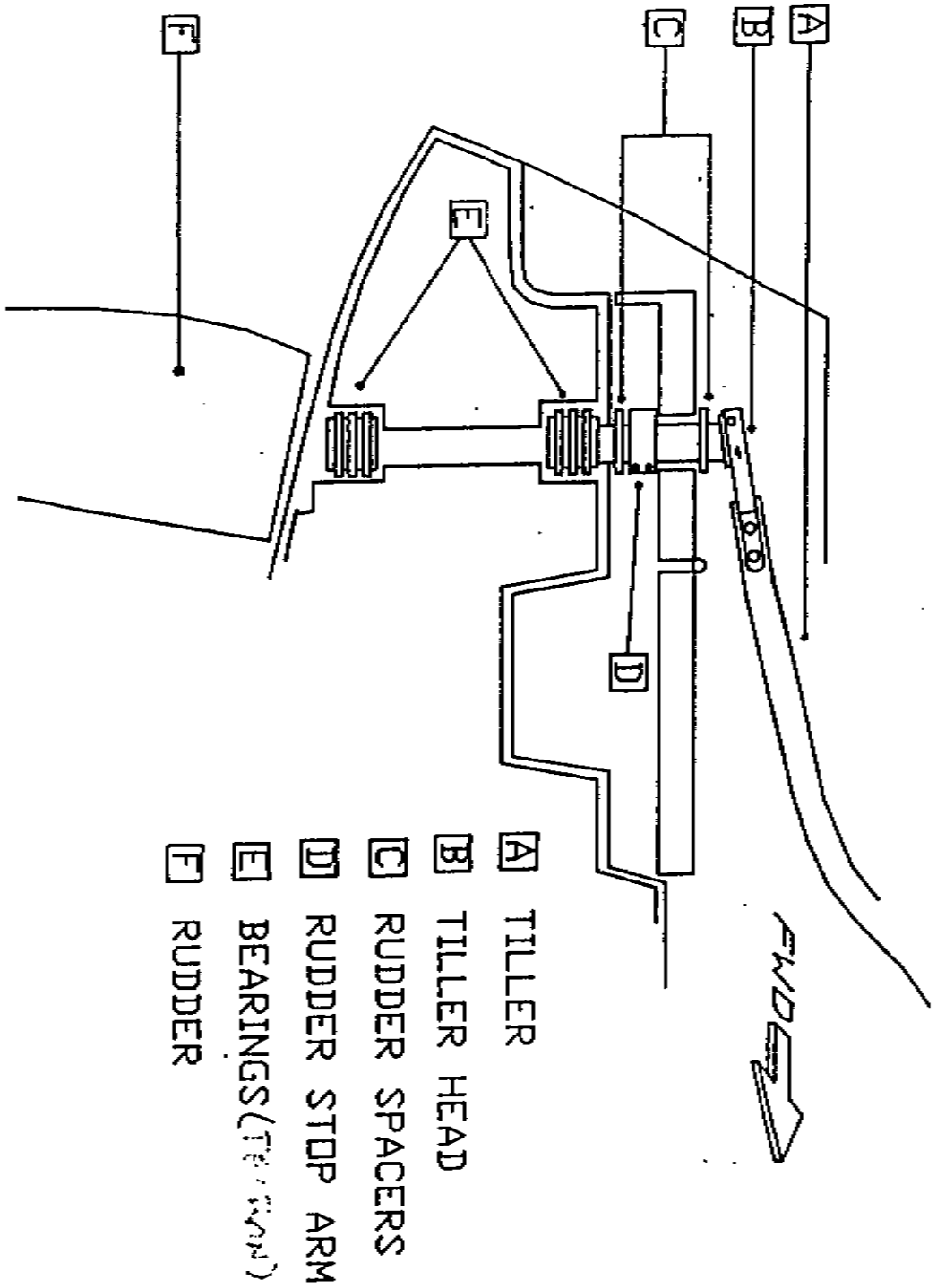

HUNTER H27 OUTBD. RUDDER DETAIL
H262626A

② ENGINE CONTROL CONFIGURATION

STEP ONE: ROUTE THE THROTTLE AND SHIFTING CABLES THROUGH THE PROPER HOLES IN THE CABLE GUIDE INTO THE PORT LAZARETTE LOCKER (BE CAREFUL TO LEAVE THE PROPER END OF THE CABLES TO MOUNT TO THE MOTOR).

STEP TWO: MOUNT THE CONTROL MECHANISM AND THE IGNITION TO THE PORT SIDE OF THE COCKPIT.

NOTE: USE THE SUPPLIED INSTRUCTIONS FOR THE MECHANISM AND THE IGNITION FOR INSTALLATION.

MOUNT THE ENGINE CONTROL MECHANISM 4 1/2" AFT OF THE AFT BULKHEAD (LOCATED BETWEEN THE LAZARETTE AND EUROPEAN SEAT) AND 15" ABOVE THE COCKPIT FLOOR. MOUNT THE IGNITION SWITCH 2 1/4" AFT OF THE AFT BULKHEAD AND 11" ABOVE THE COCKPIT FLOOR.

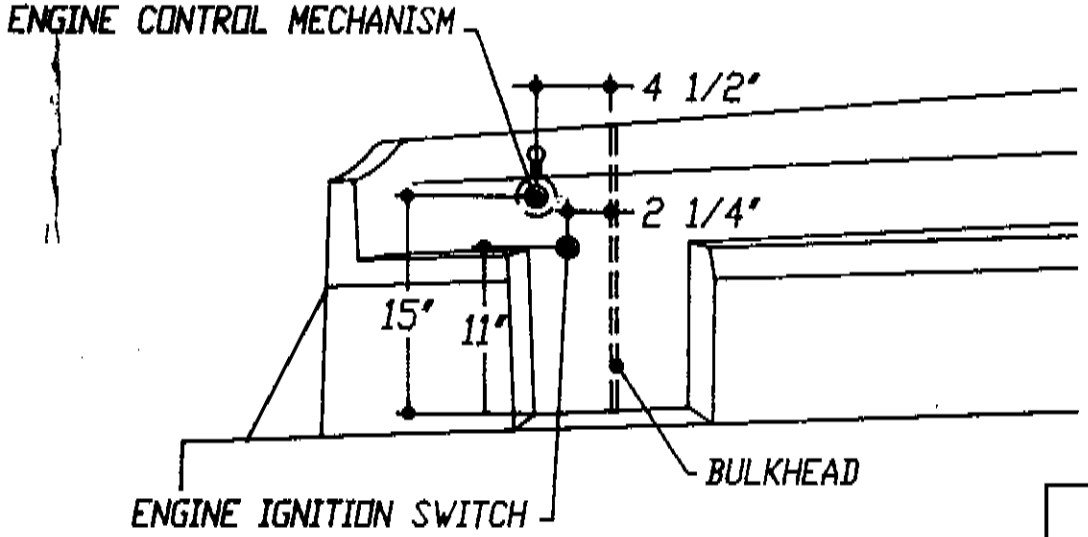

VIEW LOOKING PORT

HUNTER

HUNTER 27 OUTBOARD ENGINE CONTROL CONFIGURATION H27A2609

③ WIRING INSTRUCTIONS (COCKPIT CONTROL AND IGNITION)

STEP ONE: BEFORE WIRING BEGINS MAKE SURE THAT THE IGNITION KEY IS IN THE VERTICAL POSITION THE HARNESS SHOULD CONNECT TO THE IGNITION WIRES AS FOLLOWS.

HARNESS		IGNITION
RED	TO	UPPER RIGHT RED *
GREEN	TO	GREEN
BROWN	TO	BROWN
BLUE	TO	BLUE
BLACK	TO	BLACK

*AS VIEWED LOOKING TOWARD CENTERLINE FROM INSIDE THE LAZARETTE

STEP TWO: IF THE TOHATSU IS SUPPLIED, THE SAFETY SWITCH LOCATED ON THE ENGINE THROTTLE CONTROL IS NOT NEEDEED. IF HOWEVER, THE ENGINE THROTTLE CONTROL MECHANISM IS USED WITH ANOTHER ENGINE, IT MAY NECESSARY TO USE THE SAFETY SWITCH PROVIDED. SOME ENGINES DO NOT PROVIDE A BUILT IN SAFETY SWITCH. SHOULD THIS BE THE CASE, FOLLOW THE ENGINE CONTROL MANUFACTURE'S DIRECTION REGARDING CORRECT INSTALLATION.

NOTE: IF FOR SOME REASON THE FITMENTS PROVIDED WITH THE WIRING HARNESS AND IGNITION DO NOT MATCH TOGETHER PROPERLY, THE WIRING HARNESS IS PROBALLY INSTALLED BACKWARDS, THEREFORE, BE SURE TO FIT THE CORRECT END OF THE HARNESS TO THE IGNITION BEFORE FINAL INSTALLATION.

HUNTER

④ WIRING INSTRUCTIONS (FOR 9.9HP TOHATSU ENGINE)

NOTE: WITH THE TOHATSU ENGINE THE BLUE WIRE LEADING FROM THE IGNITION IS NOT NEEDED.

STEP ONE: REMOVE THE ENGINE COVER; FAMILIARIZE YOURSELF WITH THE WIRING LOCATED ON THE STARBOARD SIDE.

STEP TWO: LOCATE THE STARTER WIRES (RED AND GREEN) AND DISCONNECT THEM AT THE INTERMEDIATE FITMENT. CONNECT THE RED AND GREEN WIRES FROM THE STARTER SWITCH TOGETHER, THIS WILL AVOID CONFUSION LATER. NOW CONNECT THE GREEN WIRE FROM THE HARNESS TO THE DISCONNECTED GREEN WIRE FROM THE STARTER SWITCH.

STEP THREE: CONNECT THE RED WIRE FROM THE HARNESS TO THE DISCONNECTED RED WIRE FROM THE STARTER SWITCH.

STEP FOUR: LOCATE THE BLACK WIRE FROM THE KILL SWITCH AND CONNECT IT AT THE INTERMEDIATE FITMENT TO THE BLACK WIRE FROM THE HARNESS. THE HARNESS SHOULD KEEP THE ORIGINAL LEAD OF THE BLACK WIRE INTACT.

STEP FIVE: LOCATE THE BROWN WIRE FROM THE KILL SWITCH AND CONNECT IT AT THE INTERMEDIATE FITMENT TO THE BROWN WIRE FROM THE HARNESS. THE HARNESS SHOULD KEEP THE ORIGINAL LEAD OF THE BROWN WIRE INTACT.

THE ENGINE IS NOW WIRED AND THE CABLE GUIDE MAY BE PERMANETLY INSTALLED ONTO THE TRANSOM ENGINE BRACKET. ENOUGH WIRE AND CABLE SHOULD BE LEFT OUTSIDE THE TRANSOM TO ALLOW FULL MOVEMENT OF THE ENGINE.

HUNTER

HUNTER

TUNING THE RIGGING:

MAST TUNING INSTRUCTIONS:

Attach stays and shrouds.

After raising your mast, attach the headstay, backstay, upper shrouds and lower shrouds. Set the headstay turnbuckle at 1/2 open and then tighten backstay turnbuckle to medium tension.

To center mast athwartships, start with only slight tension on the upper and lower shrouds. Check to see if the mast is centered in the boat by measuring from the masthead to the chainplates with a steel tape measure hoisted completely up the main halyard. Adjust the upper shroud until the measurements port and starboard are exactly the same. Now the spar is plumb athwartships, tension both uppers equally, counting turnbckle revolutions as you go. Tighten uppers until you have approximately 1" of "prebend" fore and aft in the mast. This is achieved because the swept spreaders will push the middle part of the mast forward as you increase tension of the uppers.

Now tighten the lower shrouds evenly making sure the mast remains straight athwartship. Sight up the luff groove to assure this straightness. Lowers should end up almost as tight as the uppers. Tighten backstay to a taut position. Perhaps 8-10 turns past your original tension.

Check the mast tuning by sailing in medium winds (10-12 knots). Sometimes fine tuning of the upper and lower shrouds is necessary when the spar is loaded in sailing conditions. Sail on both tacks, sighting up the luff groove to check athwartship straightness. Both upper and lower shrouds should not be loose on the leeward side.

When mast tuning is complete, install cotter pins in all turnbuckles and tape over sharp edges of the cotter pins with chafe tape.

HUNTER

TUNING THE B&R RIGGING

NOMENCLATURE DESIGNATION

upper-upper	D3*
lower upper	V2
lower intermediate	V1
lower	D1
upper intermediate	D2*
lower diamond	d1
upper diamond	d2

*D2 and D3 are cut to a fixed length (no turnbuckles).

Initial tuning is best accomplished before the mast is stepped.

Support the mast, forward side down, about 1/4 of its length from the end and at its center. Once the mast is supported, make certain that it has no bow in any direciton. Attach a small string from the masthead, in line with the sail track groove, to the base of the mast, stretching it as tight as possible. Check to make sure it is a constant distance from the mast along the entire length.

You are now ready to "tune in" the desired mast bend, which is 1% of the mast height above the boom (.01 x mast height above boom). On a 50' mast, this would be .5 feet at the mid point of the mast.

Using the rigging diagram, locate d1 and d2. Before tuning, make sure the turnbuckles are adjusted back with equal thread showing. Carefully counting turns, adjust d1 port, d1 starboard, d2 port and d2 starboard evenly until the desired bend is induced. This is checked by measuring from the string down to the mast at the center of the mast.

It is important to make sure the mast is straight athwartships at this time.

You are now ready to step the mast.

Step the mast with all shrouds loosely attached.

Adjust the forestay and backstay to obtain the desired mast rake. The mast should be vertical or raked aft. The more rake, the greater the weather helm. The forestay and backstay should have a reasonable amount of tension on them.

Adjust V2 (port and starboard) evenly until they are tight. You should finish with approximately equal amounts of thread showing on each turnbuckle.

Using the jib halyard, check the mast for athwartship plumb. Pull the halyard out to the side of the boat and below the shear. Repeat the procedure on the opposite side. If you find a big difference (more than 1/2") adjust turnbuckles an equal amount in opposite directions until the mast is straight.

Adjust V1 (port and starboard), using the above procedure.

Repeat for D1 (port and starboard).

Your mast should now have the original "pre-bend" and be straight athwartship.

Check the mast tuning by sailing in medium winds (10-12 knots). Sail on both tacks, sighting up the luff groove to check athwartship straightness. Shrouds should not be loose on the leeward side. When mast tuning is complete, install cotter pins in all turnbuckles and tape over sharp edges of the cotter pins with chafe tape.

Hunter
B & R RIGGING

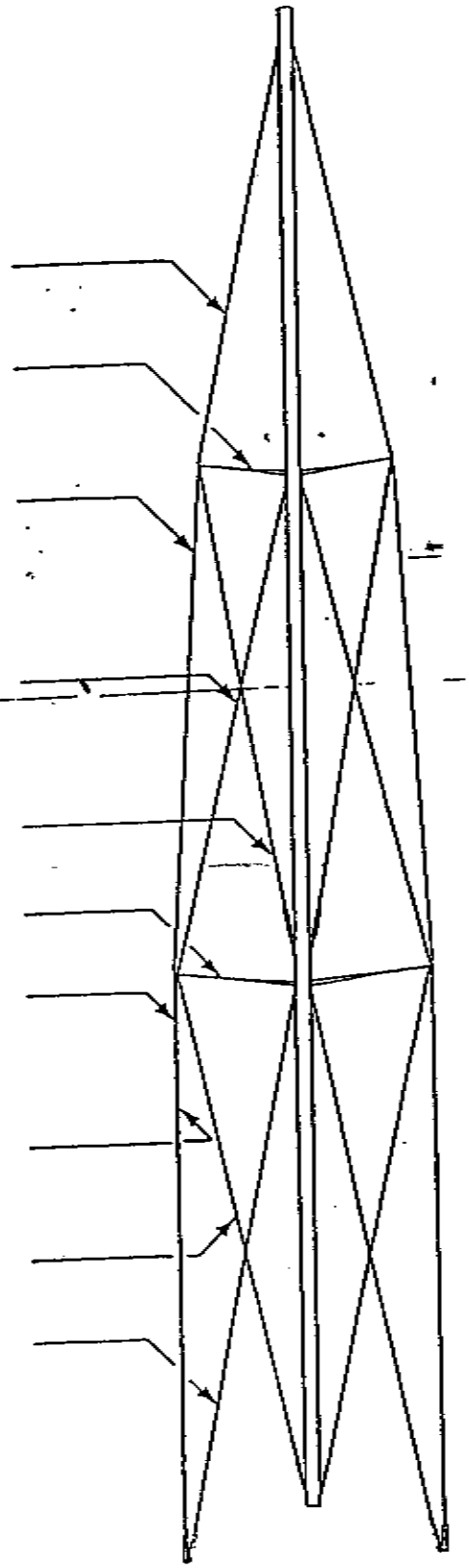

Hunter
RIGGING DIAGRAM

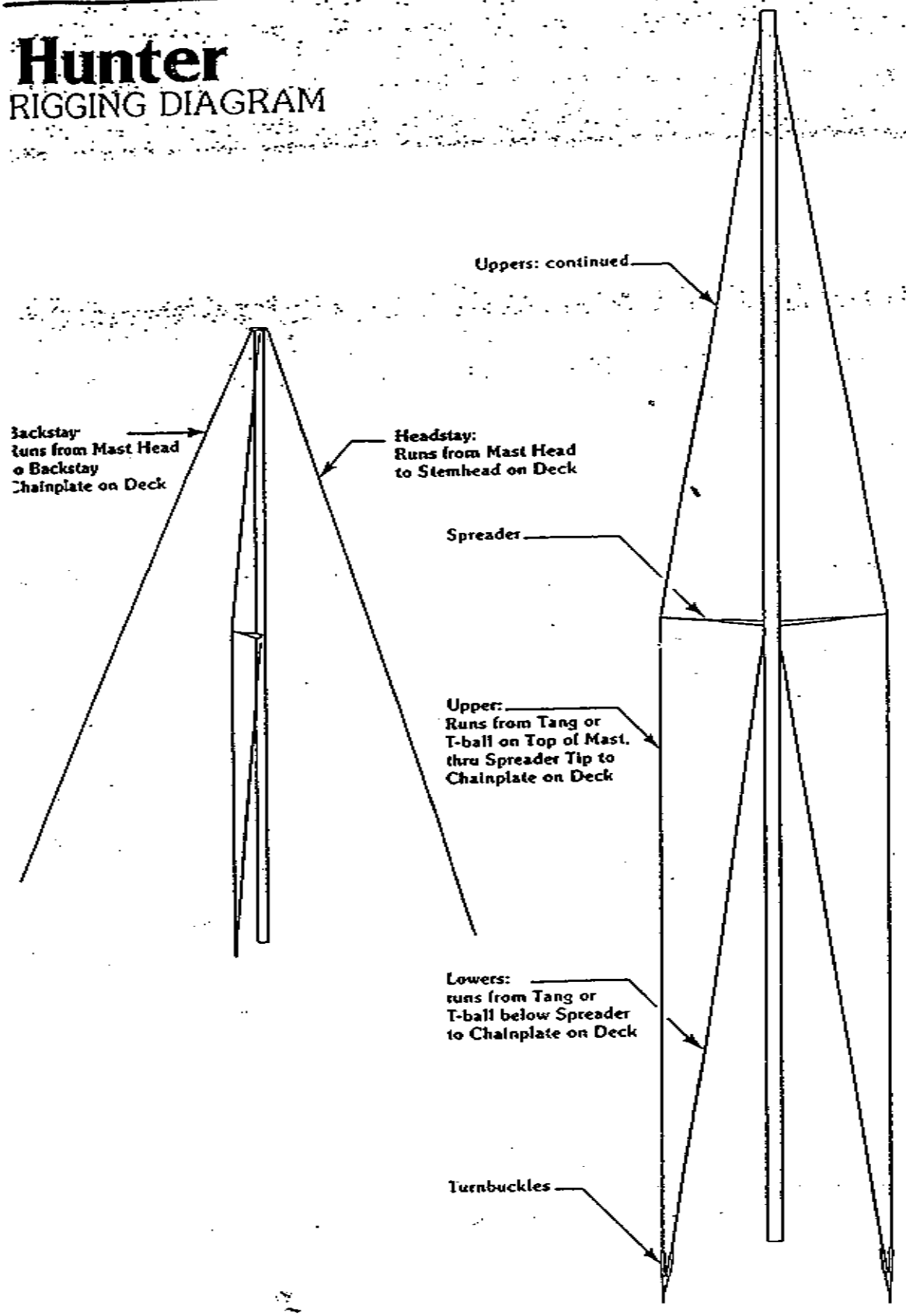

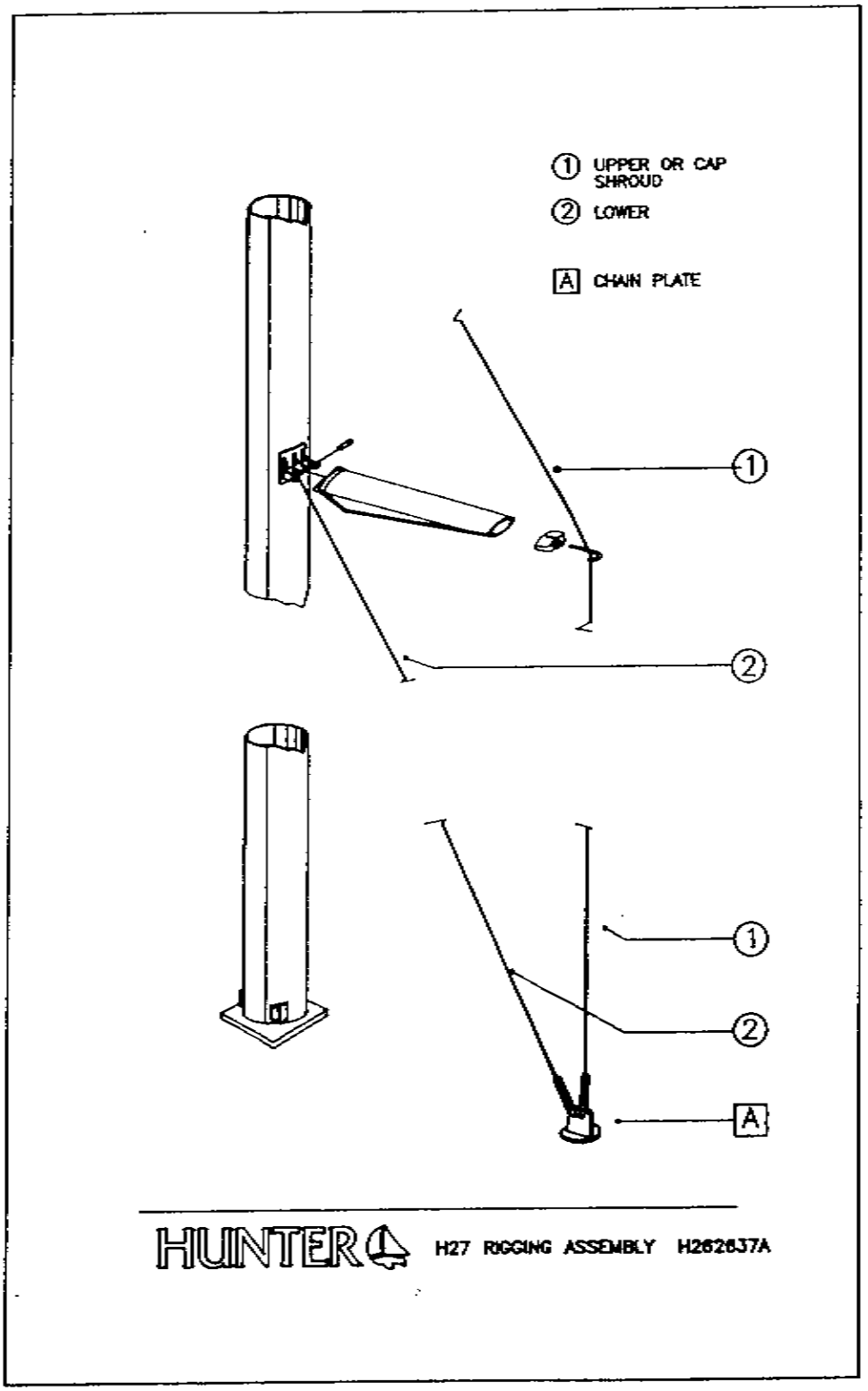

HUNTER H27 RIGGING ASSEMBLY H262637A

(11)

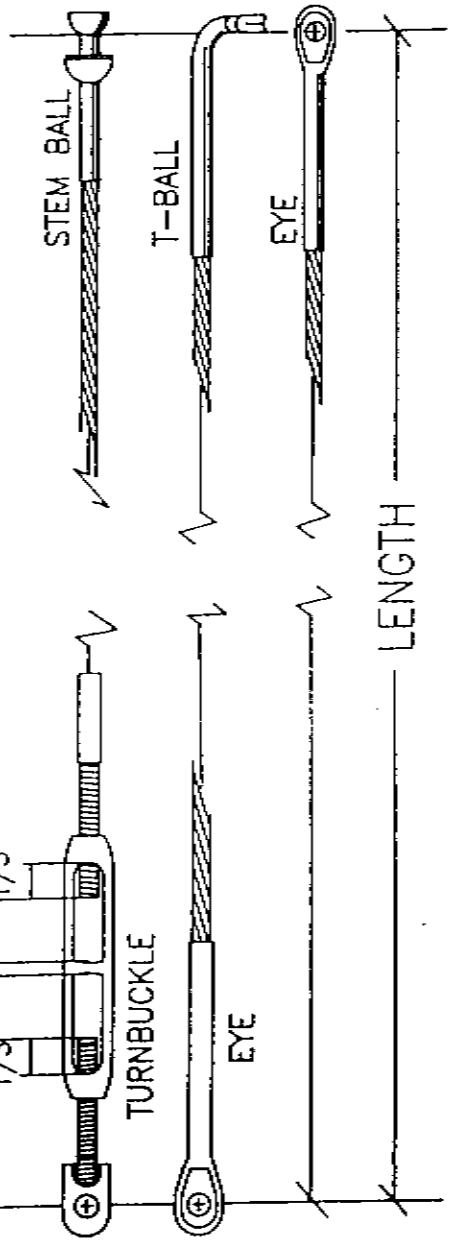

COPY

HUNTER

RIGGING LENGTHS

GEN2614A

(10)

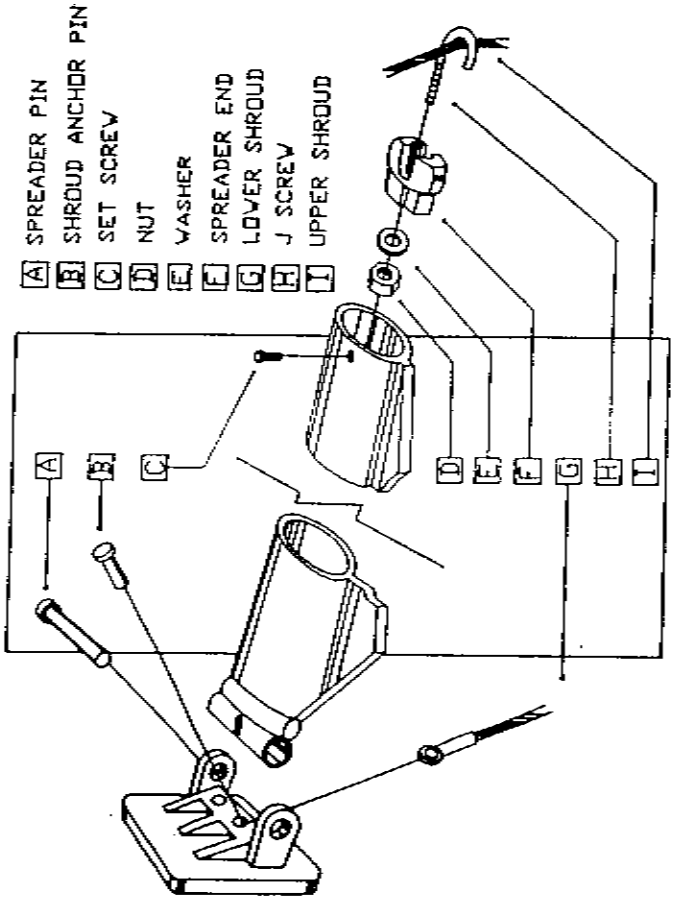

HUNTER Z-SPAR SPREADER DETAIL

GEN2616A

COPY

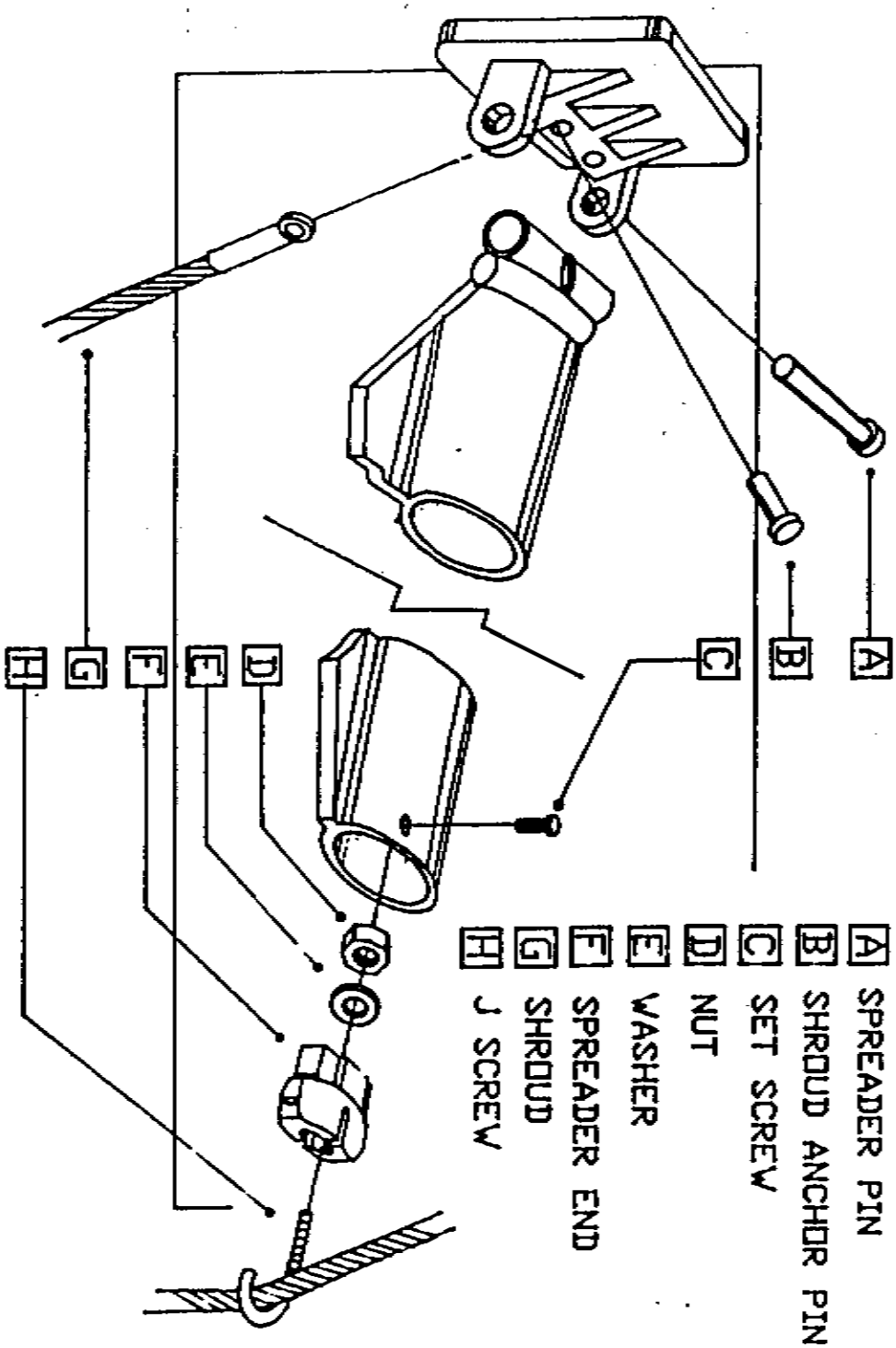

HUNTER H27 SPREADER TIP DETAIL H262625A

A (3) SINGLE BLOCKS SCHAEFER #501-03
B FIDDLE BLOCK SCH. #501-43
C MAIN HALYARD EXIT
D JIB HALYARD EXIT
E (2) GARHAUER BLKS.
F FIDDLE W/BECKET SCH. #501-55
G TRIPLE DECK ORGANIZER SCH. #10-90
H SINGLE W/BECKET SCH. #501-64N
I SWIVEL CAM CLEAT SCH. #70-61
J FIDDLE BLK. SCH. #05-56S

HUNTER H27 RUNNING RIGGING H262622A

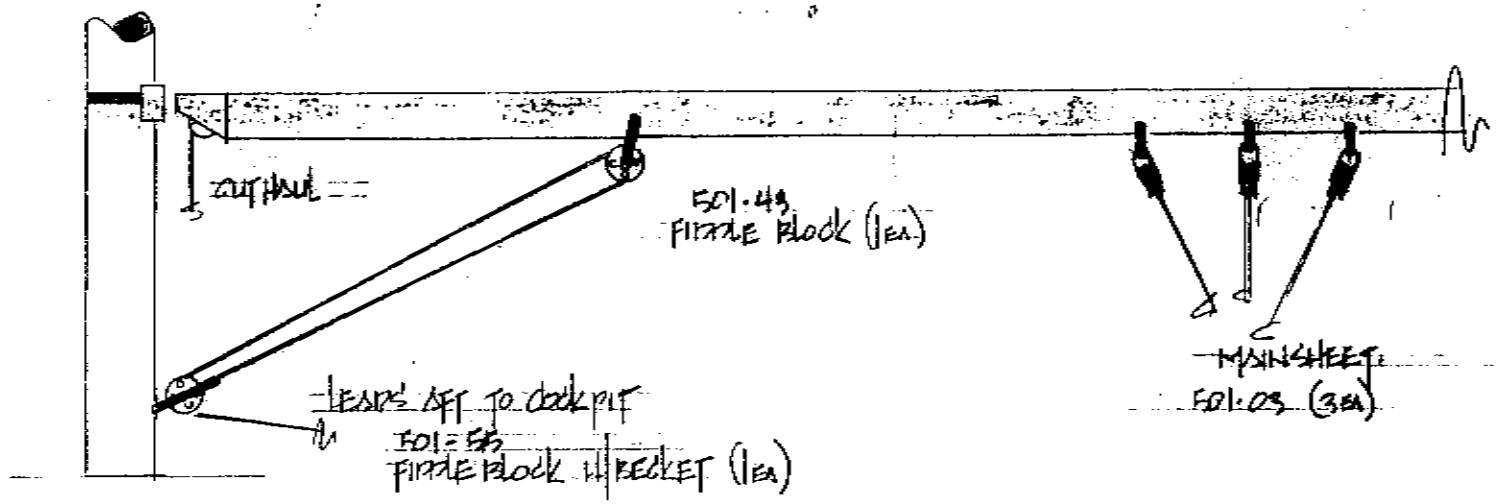

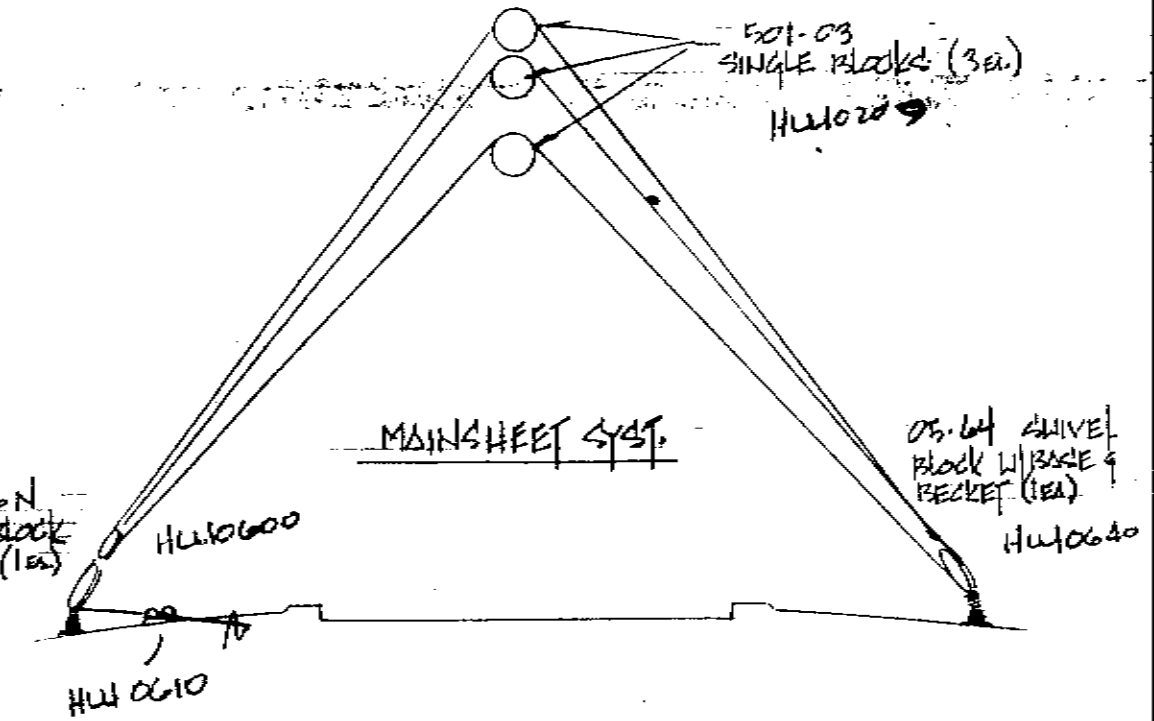

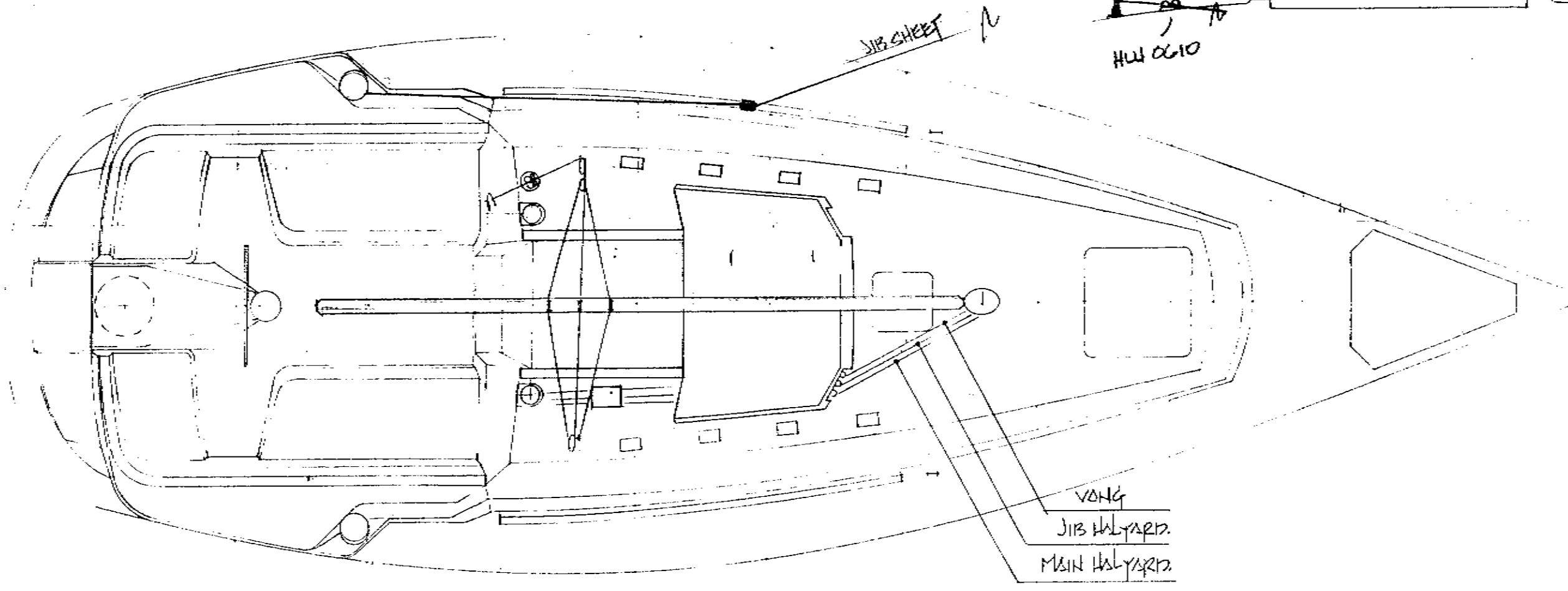

HUNTER MARINE Auburn, AL

SCALE 1/2" = 1'-0"	REVISIONS	BY	DATE
DATE 11-4-88			
DR. GENE / CKD.			
APVD.			
TITLE RUNNING RIGGING DIAGRAM		NO. H26B2/0.3	

BRUNING 40-5000

A (3) SINGLE BLOCKS SCH. #501-03
(ATTACHED TO BOOM BY BOOM BALES)

B SWIVEL CAM CLEAT SCH. #70-61

C FIDDLE BLK. SCH. #501-55

D SINGLE W/BECKET SCH. #501-43

HUNTER H27 MAINSHEET DETAIL H262624A

(17)

COPY

HUNTER

BOOM AND REEF LAYOUT
CONVENTIONAL REEF

GEN2615A

HUNTER H27 BOOM VANG DETAIL

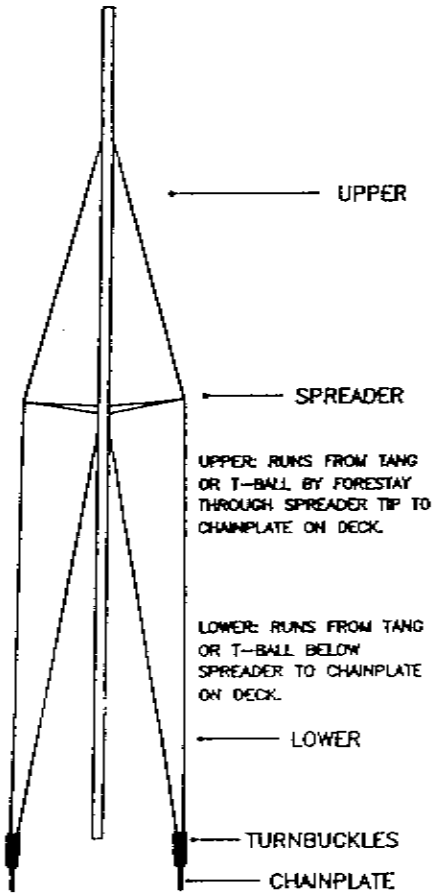

BACKSTAY: RUNS FROM MASTHEAD TO BACKSTAY-CHAINPLATE ON DECK.

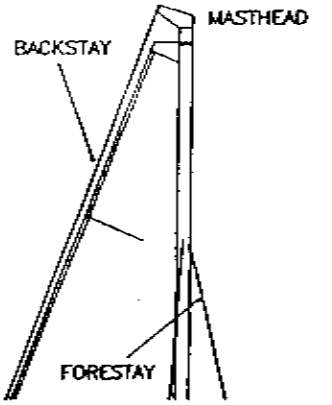

FORESTAY RUNS FROM A POINT APPROXIMATELY 20% BELOW MASTHEAD TO STEMHEAD FITTING.

COPY

HUNTER

SINGLE SPREADER FRACTIONAL RIG W/ SWEPT BACK SPREADERS

GEN2600A

27'

[illegible]	Qtyn.	Diameter	Length
[illegible]			
FORESTAY	1 EA.	3/16"	31' 5"
BACKSTAY UPPER	1 EA.	5/32"	25' 10 1/2"
BACKSTAY BRIDLES	2 EA.	1/8"	11' 11 3/8"
UPPERS	2 EA.	7/32"	29' 10 3/4"
LOWERS	2 EA.	7/32"	15' 2 1/4"
[illegible]			
MAIN HALYARD	1 EA.	3/8"	81'
JIB HALYARD	1 EA.	3/8"	73'
MAIN SHEET	1 EA.	7/16"	83'
JIB SHEET	2 EA.	3/8"	30'
VANG LINE	1 EA.	5/16"	26'
TOPPING LIFT	1 EA.	1/4"	50'

(PT NO) RI 0805

HUNTER - 27 (RUNNING RIGGING)

QTY	DESCRIPTION	WIRE SIZE	ROPE SIZE	SHACKLE	CUT DIM.	O/A
1	MAIN HALYARD		3/8" L.S	3900-11Z	81'-0"	80'-
1	JIB HALYARD		3/8" L.S	721-1 SHACKLE	73'-0"	72'-
1	MAIN SHEET		7/16" L.S	EYE ONE END	83'-0"	82'-
2	JIB SHEETS		3/8" L.S	BBE	30'-0"	30'-
1	VANG LINE		5/16" L.S	EYE ONE END	26'-0"	25'-
1	TOPPING LIFT		1/4" L.S	EYE ONE END	50'-0"	49'-
1	ANCHOR LINE		3/8" TWIN NYLON	W/THIMBLE & SHACKLE	150'-	150'

Hunter-27 2-13-87

DESCRIPTION	WIRE SIZE + TYPE	FITTING	FITTING	O/A DIM.
Forestay	3/16 1x19	C.S. Meye	6-12-12	31'5"
Backstay upper	5/32 1x19	O.S. Meye	[redacted] Stemball (DERMAC W/BC 4 END)	25'10 1/2"
2-5/16 x 1/4 x 1/4 splitter plates				
Reidks	1/8 1x19	O.S. Meye	4-8-8	11'11 3/8"
Uppers	7/32 1x19	Stemball/KB56	7-12-12	29'10 3/4"
Lowers	7/32 1x19	O.S. Meye	7-12-12	15'2 1/4"
Part #'s				
RI0805				
RI0805				
L6 70				