OPERATOR'S MANUAL

WESTERBEKE

35B THREE, 38B FOUR, 42B FOUR

MARINE DIESEL ENGINES

Publication # 37435

Edition One

March 1988

WESTERBEKE

WESTERBEKE CORPORATION
AVON INDUSTRIAL PARK, AVON, MA 02322 • TEL: (617) 588-7700

SAFETY PRECAUTIONS

The following symbols appear in this manual to call attention to and emphasize conditions potentially dangerous to the operator.

WARNING

The above symbol is used in the manual to warn of possible serious personal injury or loss of life.

CAUTION

The above symbol is used in the manual to caution personnel of possible damage to equipment.

Read the manual carefully and thoroughly before attempting to operate the equipment. Know when dangerous conditions can exist and take necessary precautions to protect personnel and equipment.

Fuels, exhaust gases, batteries, electrical equipment, and moving and hot parts are potential hazards that could result in serious personal injury or death. Follow recommended procedures carefully.

Always operate bilge blowers for at least five minutes before starting a gasoline-fueled engine; ensure no gasoline fumes are present before starting.

- Prevent Electric Shock

  Shut off electric power before accessing electrical equipment.

  Use insulated mats whenever working on electrical equipment.

  Make sure your clothing is dry, not damp (particularly shoes), and keep your skin surfaces dry when handling electrical equipment.

  Remove wristwatch and jewelry when working on electrical equipment.

  Do not connect utility shore power to vessel's AC circuits, except through a ship-to-shore double-throw transfer switch. Damage to vessel's AC generator may result if this is not done.

  Be extremely careful when working on electrical components. High voltage can cause injury or death.

- Exhaust Gases Are Toxic

  Ensure that the exhaust system is adequate to expel gases discharged from the engine. Check exhaust system regularly for leaks and make sure the exhaust manifolds are securely attached and no warping exists.

  Be sure the unit and its surroundings are well-ventilated.

- Use Extreme Care When Handling Engine Fuel (A constant danger of explosion or fire exists)

  Do not fill fuel tank(s) while the engine is running.

  Do not smoke or use an open flame near the engine or the fuel tank.

- Do Not Alter or Modify the Fuel System

  Be sure all fuel supplies have a positive shut-off valve.

  Be certain fuel line fittings are adequately tightened and free of leaks.

  Make sure a fire extinguisher is installed nearby and is properly maintained. Be familiar with its proper use. Extinguishers rated ABC by the NFPA are appropriate for all applications encountered in this environment.

- Use Extreme Care When Servicing Batteries

  Wear rubber gloves, a rubber apron, and eye protection when servicing batteries.

  Lead acid batteries emit hydrogen, a highly-explosive gas, which can be ignited by electrical arcing or by a lighted cigarette, cigar, or pipe. Do not smoke or allow an open flame near the battery being serviced. Shut off all electrical equipment in the vicinity to prevent electrical arcing during servicing.

- Avoid Moving Parts

  Do not service the unit while the unit is running; if a situation arises in which it is absolutely necessary to make operating adjustments, use extreme care to avoid moving parts and hot exhaust system components.

  Do not wear loose clothing or jewelry when servicing equipment; avoid wearing loose jackets, shirts or sleeves, rings, necklaces, or bracelets that might be caught in moving parts.

  Make sure all attaching hardware is properly tightened. Keep protective shields and guards in their respective place at all times.

  Do not check fluid levels or the drive-belt's tension while the unit is operating.

  Do not work on the equipment when mentally or physically incapacitated by fatigue.

IMPORTANT

PRODUCT SOFTWARE DISCLAIMER

Product software of all kinds, such as brochures, drawings, technical data, operator's and workshop manuals, parts lists and parts price lists (and other related information), instructions and specifications provided from sources other than Westerbeke, is not within Westerbeke's control and, accordingly, is provided to Westerbeke customers only as a courtesy and service. WESTERBEKE CANNOT BE RESPONSIBLE FOR THE CONTENT OF SUCH SOFTWARE, MAKES NO WARRANTIES OR REPRESENTATIONS WITH RESPECT THERETO, INCLUDING THE ACCURACY, TIMELINESS OR COMPLETENESS THEREOF, AND WILL IN NO EVENT BE LIABLE FOR ANY TYPE OF DAMAGES OR INJURY INCURRED IN CONNECTION WITH, OR ARISING OUT OF, THE FURNISHING OR USE OF SUCH SOFTWARE.

For example, components and subassemblies incorporated into Westerbeke's products and supplied by others (such as engine blocks, fuel systems and components, transmissions, electrical components, pumps and other products) are generally supported by their manufacturers with their own software, and Westerbeke must depend on such software for the design of Westerbeke's own product software. Such software, however, may be outdated and no longer accurate. Routine changes made by Westerbeke's suppliers, of which Westerbeke rarely has notice in advance, are frequently not reflected in the supplier's software until after such changes take place.

Westerbeke customers should also keep in mind the time span between printings of Westerbeke product software, and the unavoidable existence of earlier, non-current Westerbeke software editions in the field. Additionally, most Westerbeke products include customer-requested special features that frequently do not include complete documentation.

In summation, product software provided with Westerbeke products, whether from Westerbeke or other suppliers, must not and cannot be relied upon exclusively as the definitive authority on the respective product. It not only makes good sense, but is imperative that appropriate representatives of Westerbeke or the supplier in question be consulted to determine the accuracy and currency of the product software being consulted by the customer.

FOREWORD

Thank you for selecting a Westerbeke marine product for your use. We at Westerbeke are pleased to have you as a customer.

Read this manual carefully and observe all safety precautions included throughout. Operating procedures, periodic preventive maintenance procedures, installation checks, system descriptions and minor adjustment procedures are included herein so you can operate your equipment safely and properly, maintain the equipment at a high level of efficiency, and expect dependable performance and long service life in return.

Should your unit require special attention, contact your Westerbeke dealer for assistance. The Westerbeke Service Organization is trained to provide the support necessary to ensure long-term dependable performance.

If, within 60 days of submitting the Warranty Registration Form for your unit, you have not received a Customer Identification Card (see below) registering your warranty, please contact the factory in writing with Model information, including the engine's serial number and commission date.

from: WESTERBEKE CORPORATION
AVON INDUSTRIAL PARK
AVON, MA 02322

Mail To:

WESTERBEKE

AVON INDUSTRIAL PARK, AVON, MA 02322 • TEL (617) 580-7760
TELEX: 92-4444 • TWX: (617) 559-9323 • CABLE: WEZYCORP

CUSTOMER IDENTIFICATION

Adam Smith
85 Maple Street
Alden, IN 12234

Model W 35B THREE Ser. # 1234C706
Expires 7/7/88

Inspection of Equipment

The engine is shipped from the factory mounted securely and properly crated. Accessory equipment is shipped in a separate small box, usually packed within the engine's crate.

Before accepting shipment of the engine from the transportation company, the crate should be opened and the contents inspected for concealed damage. If either visible or concealed damage is noted, you should require that the delivery agent sign "Received in damaged condition" on the proper delivery receipt. Also check the contents of the shipment against the packing list and make sure that the proper notation is made if any discrepancies exist. These noted discrepancies are your protection against loss or damage. Claims concerning loss or damage *must* be made to the *carrier*, not to the Westerbeke Corporation.

TABLE OF CONTENTS

Section.....Page

W 35B THREE MARINE DIESEL ENGINE
GENERAL SPECIFICATIONS 12

W 35B THREE SYSTEM SPECIFICATIONS..... 13

W 38B FOUR MARINE DIESEL ENGINE
GENERAL SPECIFICATIONS 15

W 38B FOUR SYSTEM SPECIFICATIONS..... 16

W 42B FOUR MARINE DIESEL ENGINE
GENERAL SPECIFICATIONS 18

W 42B FOUR SYSTEM SPECIFICATIONS..... 19

INSTALLATION CHECKS 21

PREPARATION FOR STARTING 33

DESCRIPTION OF INSTRUMENT PANELS..... 35

STARTING PROCEDURE 39

STOPPING PROCEDURE..... 41

FUEL SYSTEM 43

ELECTRICAL SYSTEM..... 46

CAPTAINS PANEL DC CONTROL CIRCUIT
WIRING DIAGRAM # 36467 .....48 & 49

ADMIRALS PANEL DC CONTROL CIRCUIT
WIRING DIAGRAM #36844 .....50 & 51

COOLING SYSTEM..... 52

LUBRICATION SYSTEM 60

JS TRANSMISSION 63

OPTIONAL TRANSMISSIONS 66

ENGINE TROUBLESHOOTING..... 79

MAINTENANCE & ADJUSTMENTS..... 82

TABLE OF CONTENTS
(CONTINUED)

LAY-UP & RECOMMISSIONING 89

TABLE OF STANDARD HARDWARE
TIGHTENING TORQUES 93

TORQUE SPECIFICATIONS 94

SPARE PARTS 95

INDEX 96

GENERAL

Introduction

This manual contains the equipment operating procedures as well as additional information needed to help the operator keep the equipment in proper working order. Study and follow the instructions carefully. A planned maintenance program is included in this manual; adhering to the program will result in better equipment performance and longer equipment life. Proper diagnosis of a problem is the most important step to satisfactory repair; therefore, a troubleshooting table is included.

Understanding the Diesel Engine

The diesel engine closely resembles the gasoline engine, since the mechanism is essentially the same. The cylinders are arranged above a closed crankcase; the crankshaft is of the same general type as that of a gasoline engine; and the diesel engine has the same type of valves, camshaft, pistons, connecting rods, and lubricating system.

Therefore, to a great extent, a diesel engine requires the same preventive maintenance as a gasoline engine. The most important factors are proper ventilation and proper maintenance of the fuel, lubricating and cooling systems. Replacement of fuel and lubricating filter elements at the time periods specified is a must, and frequent checking for contamination (that is, water, sediment, or algae) in the fuel system is also essential. Another important factor is the use of the same brand of high detergent diesel lubricating oil designed specifically for diesel engines. Be careful not to put gasoline in the diesel fuel tank(s). Gasoline does not have the same lubricating qualities as diesel fuel; consequently, gasoline in the fuel lines will damage components in the fuel lift pump assembly, fuel injection pump and injectors.

The diesel engine does differ from the gasoline engine, however, in its handling and firing of fuel. The carburetor and ignition systems are done away with and in their place are two components - the fuel injection pump and the fuel injectors.

Ordering Parts

When contacting your Westerbeke dealer, parts distributor, or the factory concerning your Westerbeke unit, always provide the engine's model and serial number, and transmission number as they appear on the black and silver "Westerbeke" plate which is mounted on the engine's exhaust manifold. When ordering parts for your Westerbeke engine, be sure to insist upon Westerbeke factory packaged parts, because "will fit" or generic parts are frequently not made to the same specifications as original equipment.

Note that component locations in the manual are referenced from the front of the engine which is the pulley/drive belt end. (The flywheel/transmission end is the rear end.) Left and right sides are determined by the engine; imagine straddling the engine and facing in the same direction as the front of the engine: the left side is at your left, the right side is your right.

Westerbeke engines and generator sets are thoroughly checked and given a final run under various load conditions before leaving the factory. Test running the engine ensures dependable operation, long service, and a satisfied owner.

Care at the factory during assembly, and thorough testing, have resulted in a Westerbeke diesel engine capable of many thousands of hours of dependable service. However, the manufacturer cannot control the treatment the unit receives in the field. That part is up to the owner/operator.

W 35B THREE Marine Diesel Engine

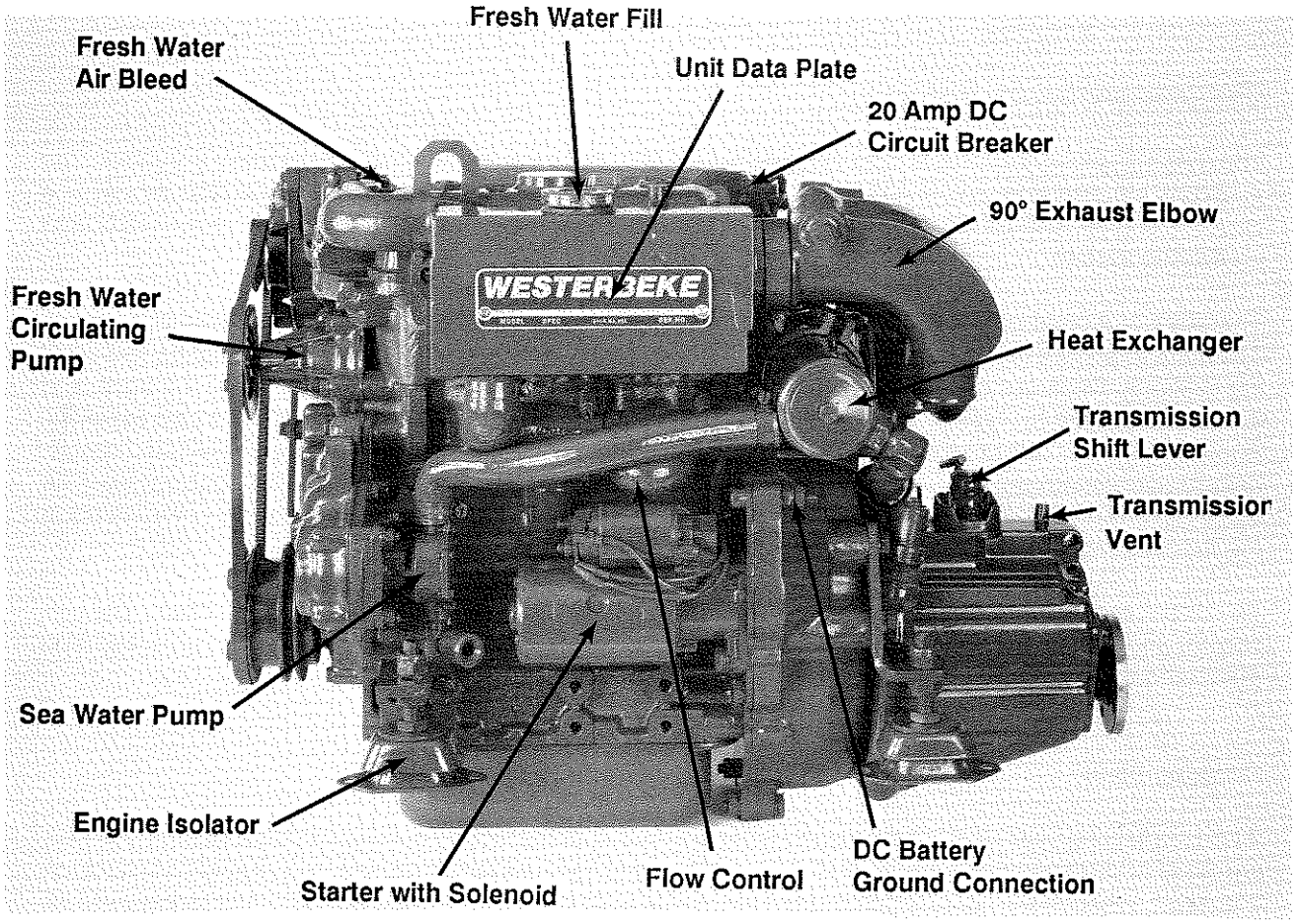

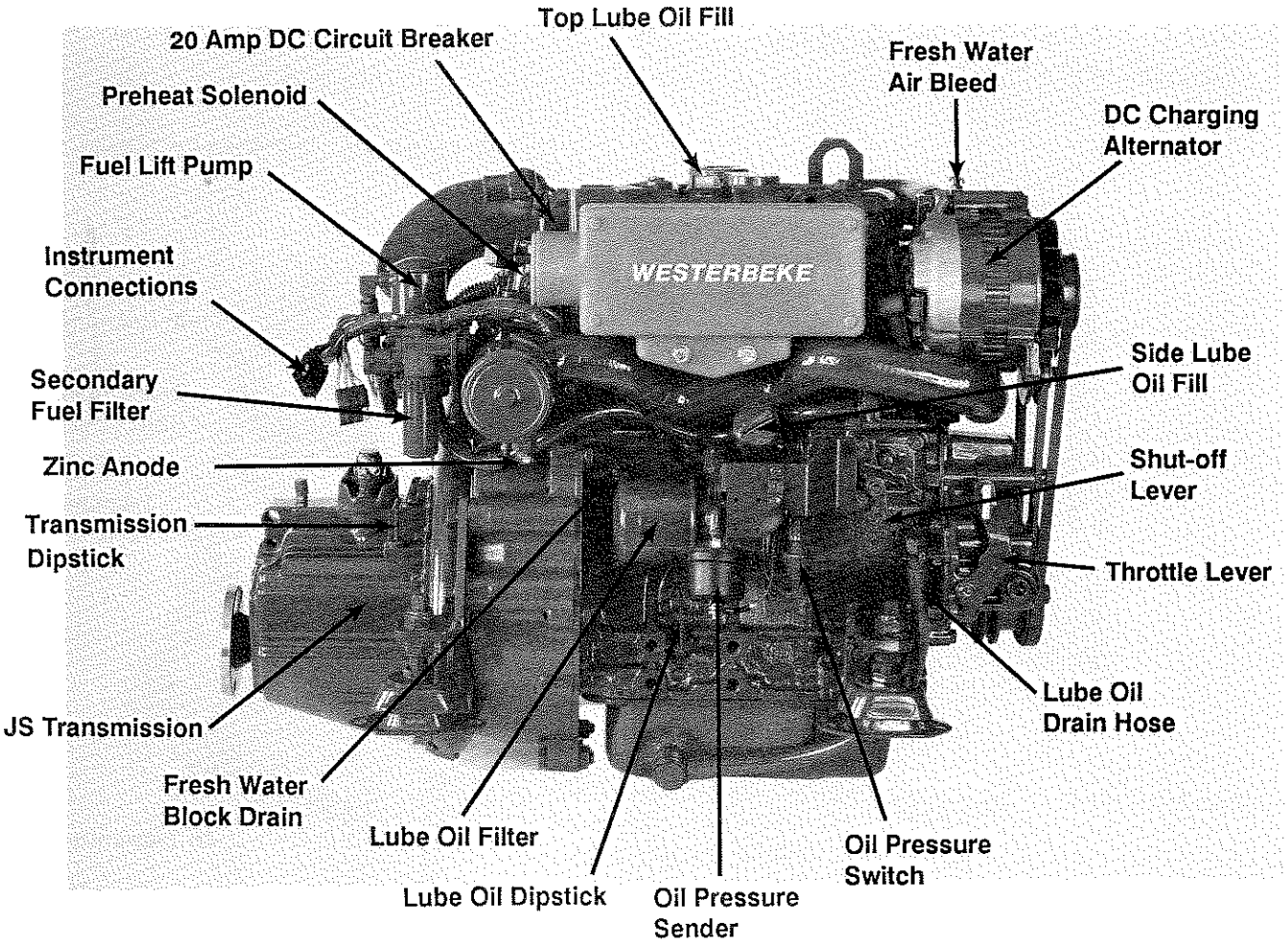
Top Lube Oil Fill
20 Amp DC Circuit Breaker
Fresh Water
Air Bleed
Preheat Solenoid
DC Charging
Alternator
Fuel Lift Pump
Instrument
Connections
WESTERBEKE
Side Lube
Oil Fill
Secondary
Fuel Filter
Zinc Anode
Shut-off
Lever
Transmission
Dipstick
Throttle Lever
Lube Oil
Drain Hose
JS Transmission
Fresh Water
Block Drain
Lube Oil Filter
Oil Pressure
Switch
Lube Oil Dipstick
Oil Pressure
Sender

W 38B FOUR Marine Diesel Engine

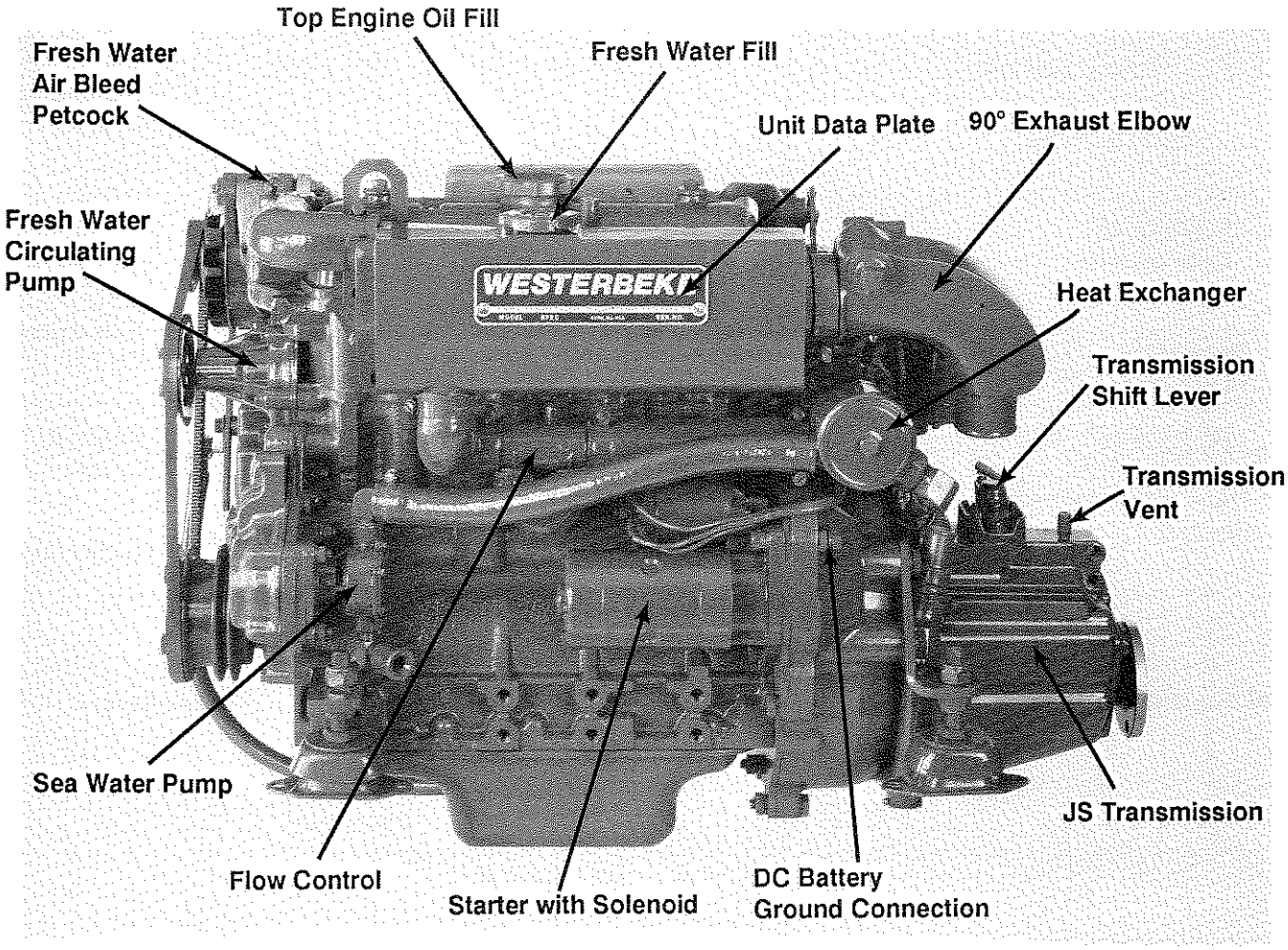

W 38B FOUR Marine Diesel Engine

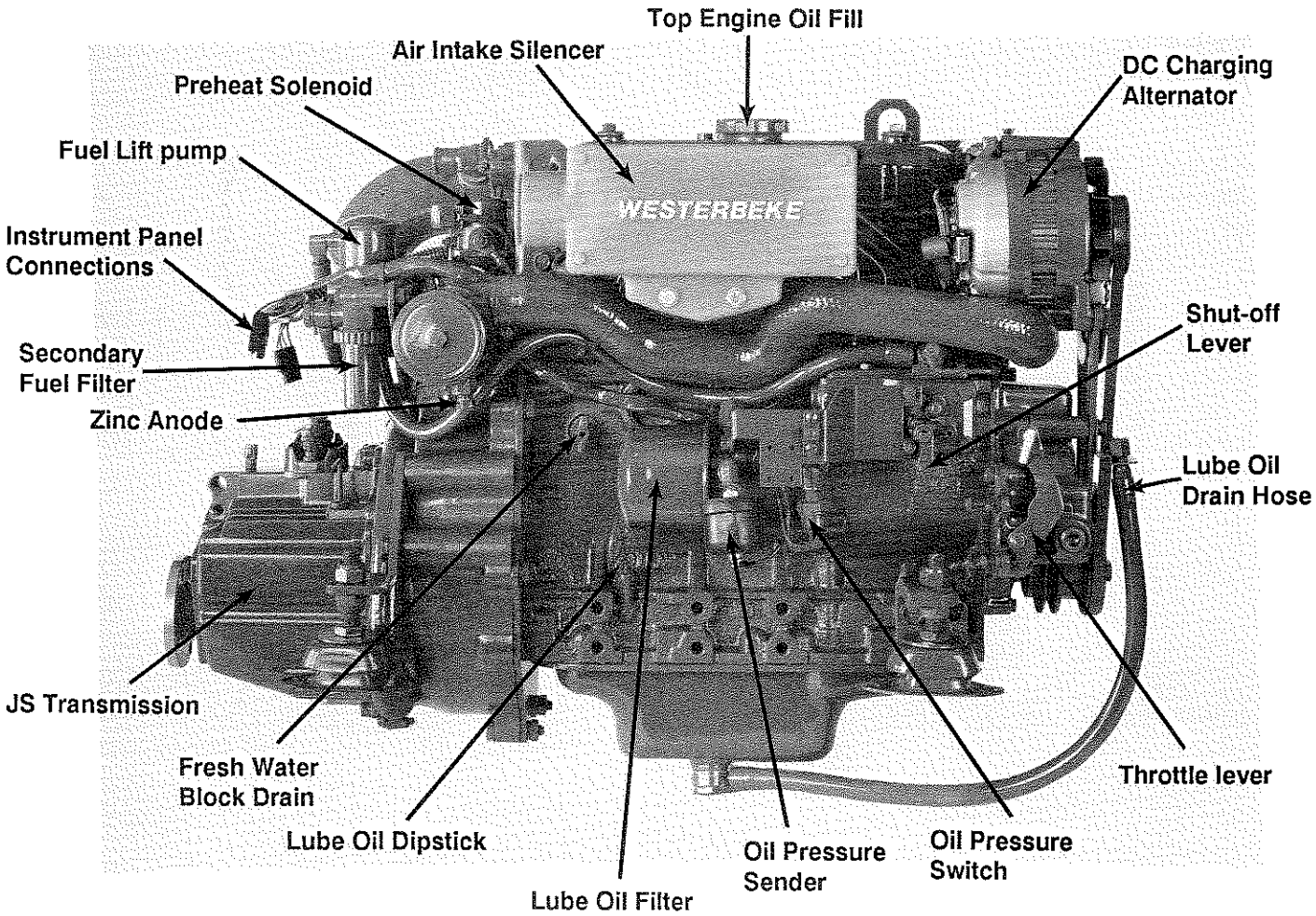

W 42B FOUR Marine Diesel Engine

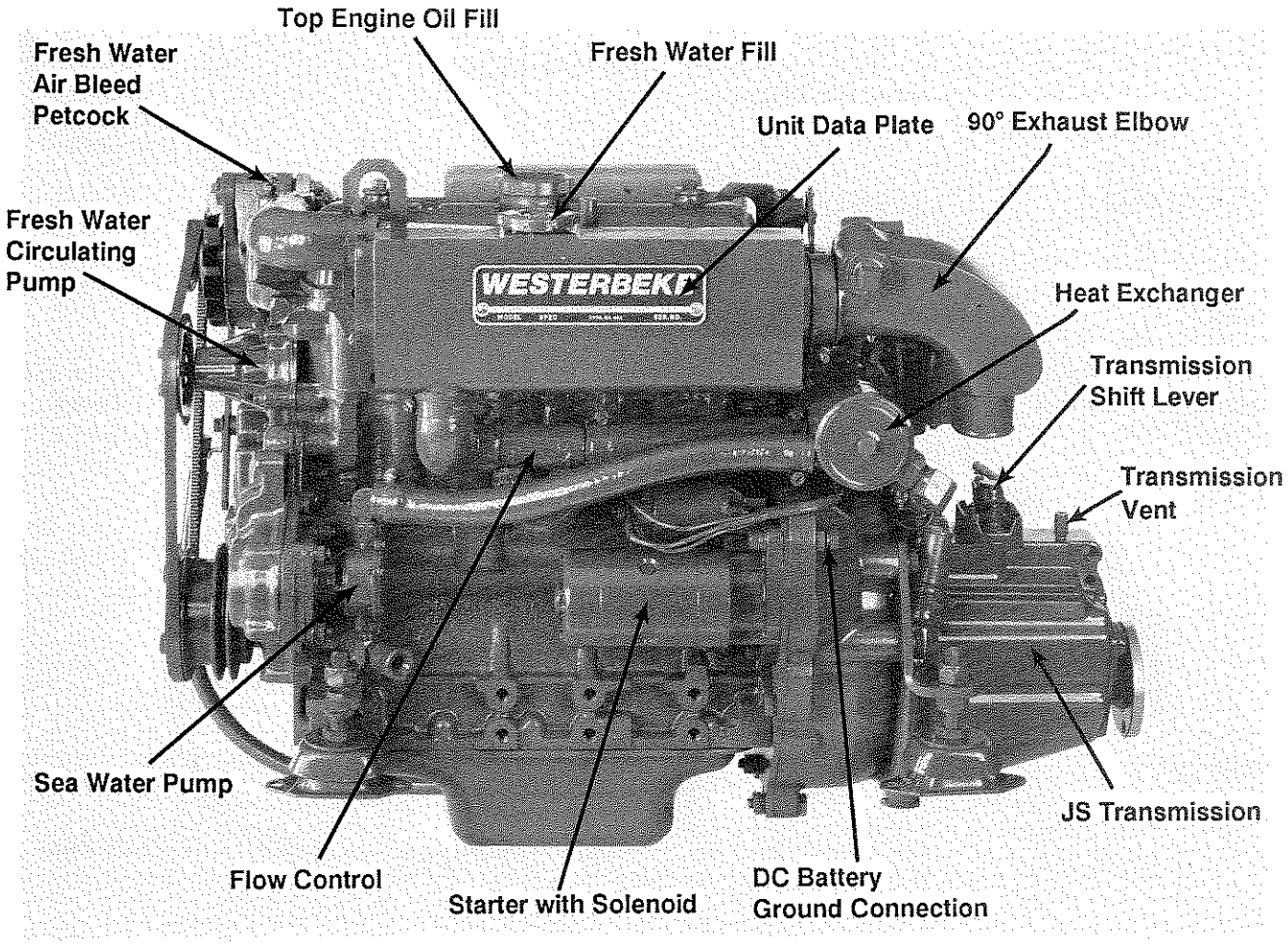

W 42B FOUR Marine Diesel Engine

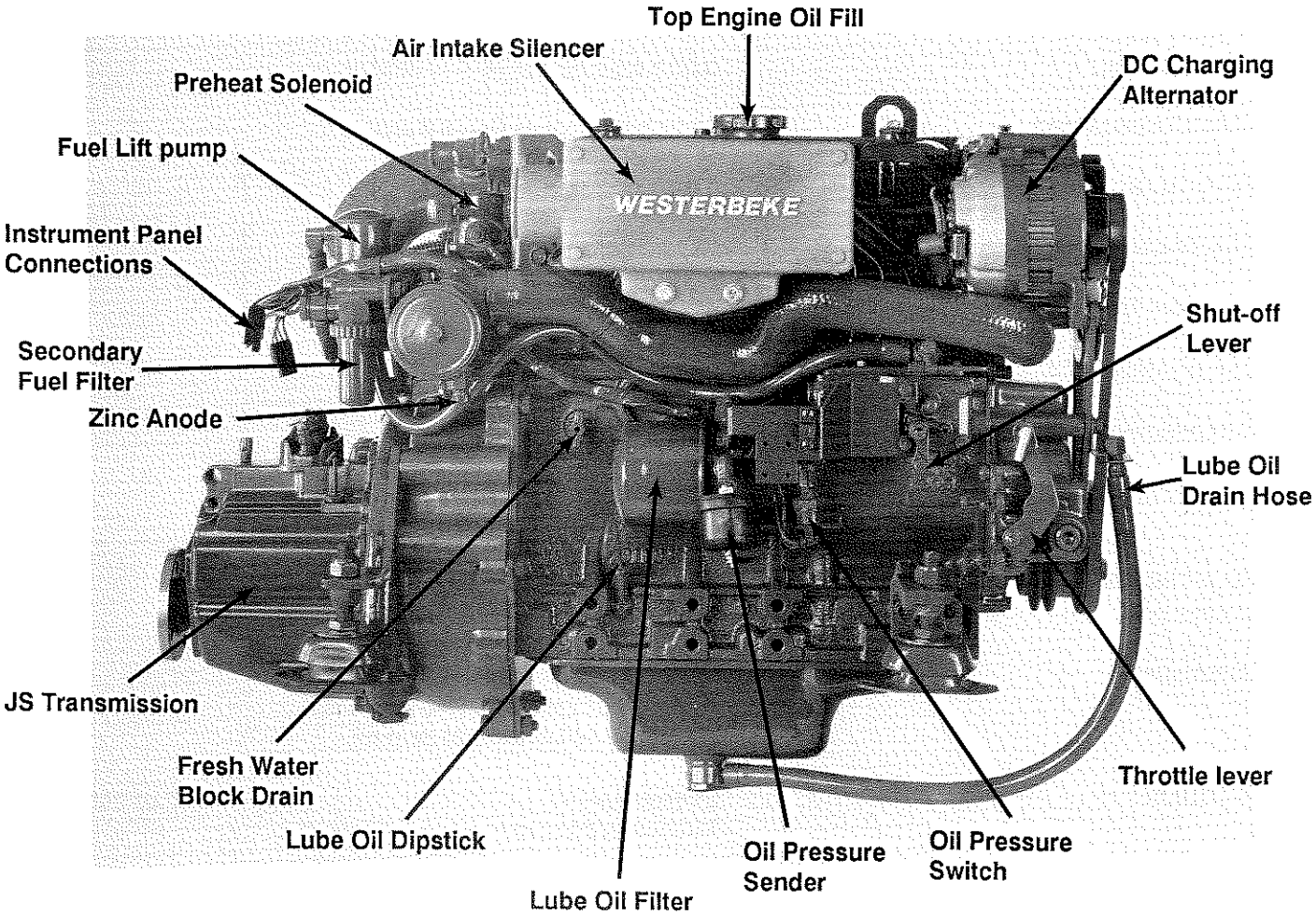

W 35B THREE MARINE DIESEL ENGINE

GENERAL SPECIFICATIONS

Engine Type	Diesel, four-cycle, three-cylinder, fresh water-cooled, vertical, in-line (32 hp at 3600 rpm, maximum)
Governor	Mechanical, centrifugal weight type
Valve Mechanism	Overhead
Combustion Chamber	Swirl chamber type
Bore & Stroke	3.07 x 3.07 inches (78 x 78 mm)
Piston Displacement	68.23 cubic inches (1.118 liters)
Firing Order	1-3-2
Direction of Rotation	Clockwise, when viewed from the front
Maximum Torque (at 2300 rpm)	41 lbs-ft (5.67 kgs-m)
Compression Ratio	23:1
Compression Pressure	455 psi (32 kg/cm^2) at 320 rpm
Valve Seat Angle	Intake 45° Exhaust 45°
Valve Clearance (engine cold)	Intake 0.010 inches (0.25 mm) Exhaust 0.010 inches (0.25 mm)
Dimensions	Height: 21.25 inches (539.75 mm) Width: 18.37 inches (466.60 mm) Max. Length: 30.10 inches (764.54 mm)
Inclination	Continuous 14° Temporary 25° (not to exceed 30 min.)
Dry Weight	368 lbs (166.9 kgs)
Fuel Consumption	0.42 U.S. gph (1.59 lph) running at 2500 rpm (approximate)
Idle Speed	800 - 1000 rpm
Cruise RPM	2500 - 3000 rpm

W 35B THREE SYSTEM SPECIFICATIONS

FUEL SYSTEM	Open flow, totally self-bleeding
Fuel	No. 2 diesel oil (cetane rating of 45 or higher)
Injection Pump	Nippondenso (Bosch M type)
Injection Timing	23° ± 0.5° BTDC (Static)
Nozzle	Throttle type
Injection Starting Pressure	2275 psi (160 kg/cm^2)
Lift Pump (with filter element)	12-Volt DC; lift capacity 6 ft (1.8 m)
Fuel Filter (on engine)	Canister type, with replaceable element
Air Cleaner	Metal screen type - cleanable
Air Flow (engine combustion)	71 cfm (2.0 cmm)
COOLING SYSTEM	
General	Fresh water-cooled block, thermostatically-controlled with sea water exchanger system
Operating Temperature	170 - 190° F (77 - 88° C)
Fresh Water Pump	Centrifugal type, metal impeller, belt-driven
Sea Water Pump	Positive displacement, rubber impeller, gear-driven
Sea Water Flow, at 3600 rpm (measured before discharging into exhaust elbow)	gpm (lpm) approximate
System Capacity (fresh water)	6 U.S. qts (5.68 liters)
LUBRICATION SYSTEM	
General	Forced lubrication by gear pump
Oil Filter	Paper element, spin-on type
Sump Capacity (includes filter)	4.22 U.S. qts (4 liters)

W 35B THREE SYSTEM SPECIFICATIONS

Operating Oil Pressure	35 - 55 psi (2.46 - 3.86 kg/cm^2)
Oil Grade	API specification CC or CD

ELECTRICAL SYSTEM

Starting Battery	12-Volt, 35 A-H, (-) negative ground (recommended) (45 A-H cold areas)
Battery Capacity	90 - 125 (Ampere-Hours)
Starting Aid	12-Volt sheathed type glow plug
Starter Motor	12-Volt, 1.2KW, solenoid, actuated shift
DC No-Load Current	60 Amps at 11.5 Volts (6500 rpm, min.)
Cold Cranking Current	190 Amps at 12 Volts
Alternator	12-Volt DC, 50 Amps
Regulator	Internal regulator, built into alternator 14.4 Volts DC ± 3 Volts

TRANSMISSION

General (JS Transmission)	Case-hardened helical gears, with an intermediate reverse gear. Reversing carried out by a servo double disc system.
Standard Gear Ratio	2.47:1
Propeller Shaft, Direction of Rotation	Right handed - standard transmission
Propeller Recommendations (using JS transmission 2.47:1 reduction)	16 D x 12 P - 2 blade or 16 D x 10 P - 3 blade Propeller should allow the engine to reach its full rated RPM (3600 + 000 - 100) at full open throttle while underway.
Lubricating Oil Grade	API specification of CC, CD, SC, SD, or SE
SAE Grade	SAE 20W/20 or SAE 30 exclusively (**DO NOT** mix grades of oil !) (**DO NOT** use multigrade oils !)
Transmission Sump Capacity	1 qt (1 liter)

W 38B FOUR MARINE DIESEL ENGINE

GENERAL SPECIFICATIONS

Engine Type	Diesel, four-cycle, four-cylinder, fresh water-cooled, vertical, in-line (37 hp at 3600 rpm, maximum)
Governor	Mechanical, centrifugal weight type
Valve Mechanism	Overhead
Combustion Chamber	Swirl chamber type
Bore & Stroke	2.87 x 3.07 inches (73 x 78 mm)
Piston Displacement	79.64 cubic inches (1.305 liters)
Firing Order	1-3-2-4
Direction of Rotation	Clockwise, when viewed from the front
Maximum Torque (at 2400 rpm)	53 lbs-ft (7.33 kgs-m)
Compression Ratio	23:1
Compression Pressure	455 psi (32 kg/cm^2) at 320 rpm
Valve Seat Angle	Intake 45° Exhaust 45°
Valve Clearance (engine cold)	Intake 0.0098 inches (0.25 mm) Exhaust 0.0098 inches (0.25 mm)
Dimensions	Height: 23.70 inches (601.98 mm) Width: 18.37 inches (466.60 mm) Max. Length: 33.77 inches (857.76 mm)
Inclination	Continuous 14° Temporary 25° (not to exceed 30 min.)
Dry Weight	419 lbs (190 kgs)
Fuel Consumption	0.42 U.S. gph (1.59 lph) running at 2500 rpm (approximate)
Idle Speed	750 - 950 rpm
Cruise RPM	2500 - 3000 rpm

W 38B FOUR SYSTEM SPECIFICATIONS

FUEL SYSTEM	Open flow, totally self-bleeding
Fuel	No. 2 diesel oil (cetane rating of 45 or higher)
Injection Pump	Nippondenso (Bosch M type)
Injection Timing	23° ± 0.5° BTDC (Static)
Nozzle	Throttle type
Injection Starting Pressure	2275 psi (160 kg/cm^2)
Lift Pump	12-Volt DC; lift capacity 6 ft (1.8 m)
Fuel Filter (on engine)	Canister type, with replaceable element
Air Cleaner	Metal screen type - cleanable
Air Flow (engine combustion)	82.9 cfm (2.34 cmm)
COOLING SYSTEM	
General	Fresh water cooled block, thermostatically-controlled with sea water exchanger system
Operating Temperature	170 - 190° F (77 - 88° C)
Fresh Water Pump	Centrifugal type, metal impeller, belt-driven
Sea Water Pump	Positive displacement, rubber impeller, gear-driven
Sea Water Flow, at 3600 rpm (measured before discharging into exhaust elbow)	gpm (lpm) approximate
System Capacity (fresh water)	7 U.S. qts (6.6 liters)
LUBRICATION SYSTEM	
General	Forced lubrication by gear pump
Oil Filter	Paper element, spin-on type
Sump Capacity (includes filter)	4.75 U.S. qts (4.5 liters)

W 38B FOUR SYSTEM SPECIFICATIONS

Operating Oil Pressure	35 - 55 psi (2.46 - 3.86 kg/cm^2)
Oil Grade	API specification CC or CD

ELECTRICAL SYSTEM

Starting Battery	12-Volt, 35 A-H, (-) negative ground (recommended) (45 A-H cold areas)
Battery Capacity	90 - 125 (Ampere-Hours)
Starting Aid	12-Volt sheathed type glow plug
Starter Motor	12-Volt, 1.2KW, solenoid, actuated shift
DC No-Load Current	60 Amps at 11.5 Volts (6500 rpm, min.)
Cold Cranking Current	190 Amps at 12 Volts
Alternator	12-Volt DC, 50 Amps
Regulator	Internal regulator, built into alternator 14.4 Volts DC ± 3 Volts

TRANSMISSION

General (JS Transmission)	Case-hardened helical gears, with an intermediate reverse gear. Reversing carried out by a servo double disc system.
Standard Gear Ratio	2.47:1
Propeller Shaft, Direction of Rotation	Right handed - standard transmission
Propeller Recommendations (using JS transmission 2.47:1 reduction)	18 D x 12 P - 2 blade or 18 D x 10 P - 3 blade Propeller should allow the engine to reach its full rated RPM (3600 + 000 - 100) at full open throttle while underway.
Lubricating Oil Grade	API specification of CC, CD, SC, SD, or SE
SAE Grade	SAE 20W/20 or SAE 30 exclusively (**DO NOT** mix grades of oil !) (**DO NOT** use multigrade oils !)
Transmission Sump Capacity	1 qt (1 liter)

W 42B FOUR MARINE DIESEL ENGINE

GENERAL SPECIFICATIONS

Engine Type	Diesel, four-cycle, four-cylinder, fresh water-cooled, vertical, in-line (42 hp at 3600 rpm, maximum)
Governor	Mechanical, centrifugal weight type
Valve Mechanism	Overhead
Combustion Chamber	Swirl chamber type
Bore & Stroke	3.07 x 3.07 inches (78 x 78 mm)
Piston Displacement	90.93 cubic inches (1.49 liters)
Firing Order	1-3-2-4
Direction of Rotation	Clockwise, when viewed from the front
Maximum Torque (at 2500 rpm)	56 lb-ft (7.74 kg-m)
Compression Ratio	23:1
Compression Pressure	455 psi (32 kg/cm^2) at 320 rpm
Valve Seat Angle	Intake 45° Exhaust 45°
Valve Clearance (engine cold)	Intake 0.0098 inches (0.25 mm) Exhaust 0.0098 inches (0.25 mm)
Dimensions	Height: 23.70 inches (601.98 mm) Width: 18.37 inches (466.60 mm) Max. Length: 33.77 inches (857.76 mm)
Inclination	Continuous 14° Temporary 25° (not to exceed 30 min.)
Dry Weight	419 lbs (190 kgs)
Fuel Consumption	0.42 U.S. gph (1.59 lph) running at 2500 rpm (approximate)
Idle Speed	750 - 950 rpm
Cruise RPM	2500 - 3000 rpm

W 42B FOUR SYSTEM SPECIFICATIONS

FUEL SYSTEM	Open flow, totally self-bleeding
Fuel	No. 2 diesel oil (cetane rating of 45 or higher)
Injection Pump	Nippondenso (Bosch M type)
Injection Timing	23° ± 0.5° BTDC (Static)
Nozzle	Throttle type
Injection Starting Pressure	2275 psi (160 kg/cm^2)
Lift Pump	12-Volt DC; lift capacity 6 ft (1.8 m)
Fuel Filter (on engine)	Canister type, with replaceable element
Air Cleaner	Metal screen type - cleanable
Air Flow (engine combustion)	94.0 cfm (2.66 cmm)
COOLING SYSTEM	
General	Fresh water cooled block, thermostatically-controlled with sea water exchanger system
Operating Temperature	170 - 190° F (77 - 88° C)
Fresh Water Pump	Centrifugal type, metal impeller, belt-driven
Sea Water Pump	Positive displacement, rubber impeller, gear-driven
Sea Water Flow, at 3600 rpm (measured before discharging into exhaust elbow)	gpm (lpm) approximate
System Capacity (fresh water)	7 U.S. qts (6.6 liters)
LUBRICATION SYSTEM	
General	Forced lubrication by gear pump
Oil Filter	Paper element, spin-on type
Sump Capacity (includes filter)	4.75 U.S. qts (4.5 liters)

W 42B FOUR SYSTEM SPECIFICATIONS

Operating Oil Pressure	35 - 55 psi (2.46 - 3.86 kg/cm^2)
Oil Grade	API specification CC or CD

ELECTRICAL SYSTEM

Starting Battery	12-Volt, 35 A-H, (-) negative ground (recommended) (45 A-H cold areas)
Battery Capacity	90 - 125 (Ampere-Hours)
Starting Aid	12-Volt sheathed type glow plug
Starter Motor	12-Volt, 1.2KW, solenoid, actuated shift
DC No-Load Current	60 Amps at 11.5 Volts (6500 rpm, min.)
Cold Cranking Current	190 Amps at 12 Volts
Alternator	12-Volt DC, 50 Amps
Regulator	Internal regulator, built into alternator 14.4 Volts DC ± 3 Volts

TRANSMISSION

General (JS Transmission)	Case-hardened helical gears, with an intermediate reverse gear. Reversing carried out by a servo double disc system.
Standard Gear Ratio	2.47:1
Propeller Shaft, Direction of Rotation	Right handed - standard transmission
Propeller Recommendations (using JS transmission 2.47:1 reduction)	18 D x 13 P - 2 blade or 18 D x 11 P - 3 blade Propeller should allow the engine to reach its full rated RPM (3600 + 000 - 100) at full open throttle while underway.
Lubricating Oil Grade	API specification of CC, CD, SC, SD, or SE
SAE Grade	SAE 20W/20 or SAE 30 exclusively (**DO NOT** mix grades of oil !) (**DO NOT** use multigrade oils !)
Transmission Sump Capacity	1 qt (1 liter)

INSTALLATION CHECKS

General

Because the crafts in which Westerbeke engines are installed vary in design, installation procedures will vary according to your craft's specific design. The intent of this section is not to advise boatyards or installers on procedures already well-developed and well-understood. However, the owner/operator must realize there are details of the installation which require periodic checks to ensure the best operating conditions for the equipment and safe operating conditions for the personnel on board. Proper location and installation of the diesel engine in the vessel are of prime importance.

Factors in the installation that must be considered are ventilation, to aid in cooling and to provide air for engine combustion; exhaust system, to properly discharge raw cooling water, quiet the exhaust and expel exhaust gas; cooling water supply; fuel supply; and electrical connections.

CAUTION

For safety reasons, the engine and transmission are **NOT** filled with lubricating oil for shipment. Before leaving the factory, however, each engine with transmission is thoroughly tested with oil in it. This testing, among other things, provides all internal parts with a coating of oil. This oil acts as a preservative, providing reliable protection against corrosion for at least one year if the engine and transmission are properly stored.

Location

The location should be *dry*, and in an area where bilge water or water from above cannot splash on the engine. The engine should be properly ventilated and accessible for minor servicing and repairs (access for major repairs should be given consideration as well). The location must be properly ventilated to provide fresh air for engine combustion. The engine's lubrication oil sump dipstick, the fresh water and oil fills, and the transmission's dipstick and transmission or oil fill port must be accessible.

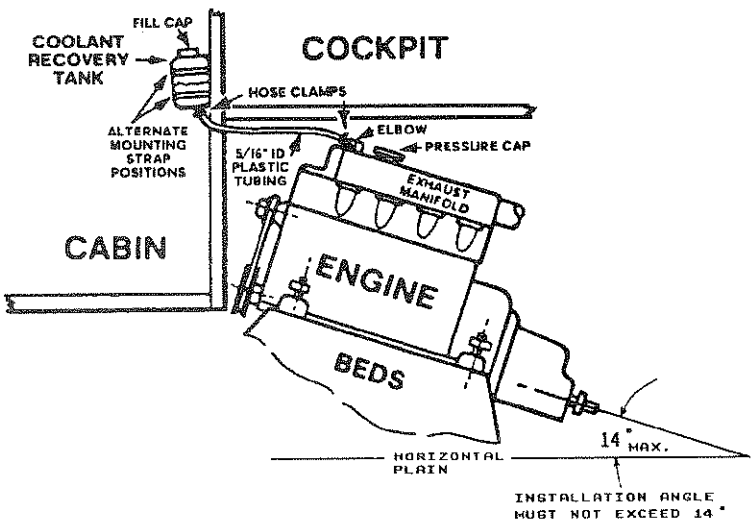

Please note that the engine's installation angle cannot exceed 14° from the horizontal plain.

Rigging and Lifting

The engine is fitted with lifting eyes. Rope or chain slings capable of supporting the engine's weight should be attached to the eyes and the engine lifted by means of tackle attached to these slings. The lifting eyes have been designed to carry the full weight of the engine; therefore, auxiliary slings are not required or desired.

CAUTION

Slings must not be so short as to place significant sheer stress on the engine's lifting eyes. Strain placed on the engine's lifting eyes by the lifting sling must not be in excess of 10° from the vertical plain.

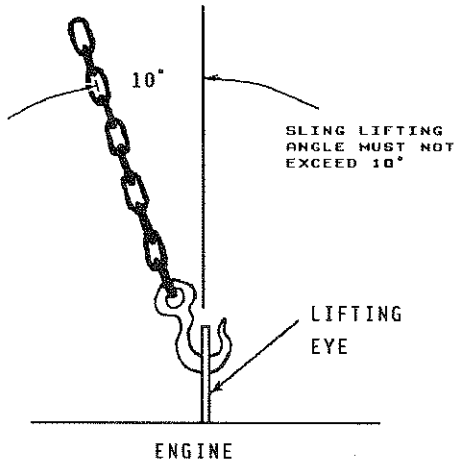

The general rule in moving engines is to see that all of the equipment used is amply strong and firmly fixed in place. Move the engine a little at a time and see that it is firmly supported. Eliminate the possibility of accidents by avoiding haste. Do not lift the engine by its propeller coupling, or pry against this coupling with a crowbar, because excessive pressure of this type may distort the coupling.

In certain situations it may be necessary to lift the engine in positions other than the horizontal position. Certain situations exist by which the engine must be lowered endwise through a small hatchway which cannot be made larger. Under these conditions, if the opening of the hatchway is extremely narrow, it is possible to reduce, to some extent, the outside dimensions of the engine by removing external components such as the alternator, the cooling system's piping, the heat exchanger, certain filters, the mounting lugs and other obstructive equipment. This accessory equipment should be removed by a competent mechanic and special care should be taken to avoid damaging any exposed parts. In addition, be careful not to allow dirt from entering any opening created by the removal of equipment. Parts removed should be returned to their respective position as soon as the engine has cleared the obstruction.

In case it becomes necessary to hoist the engine either front-end upwards or transmission-end upwards, the attachment of slings must be done carefully to avoid the possibility of damaging the parts on which the weight may bear. Special rigging work is best done by someone experienced and competent in handling heavy machinery.

Engine Bolts

Bronze or stainless steel hanger bolts of appropriate size are recommended for use through the engine's flexible mounts. Less preferred are lag screws because their hold on the wood is weakened every time they are moved, whereas the hanger bolts stay in position. If the nut on top of the hanger bolt is removed to allow the engine to be lifted from its resting place, the hanger bolt itself remains in place as a stud. Consequently, the bond between the hanger bolt and the wood is not weakened by the removal of the nut or the engine.

Foundation for the Engine

A good engine bed contributes much toward the satisfactory operation of the engine. The engine's bed must be rigidly constructed and neither deflect nor twist when it is subjected to the engine's weight or to the pressures that the boat may experience while operating in rough seas. The bed must keep the engine's alignment within one or two thousandths of an inch of this position at all times. The bed has to withstand the forward push of the propeller shaft which pushes against the thrust washer bearing which finally pushes against the engine's bolts and bed.

In fiberglass hulls, we recommend that similar wooden stringers as in wooden hulls be formed, fitted, and then glassed securely to the hull. This allows the hanger bolts to be installed firmly in the wood, thereby reducing noise and transmitted vibration.

The engine support stringers must be as wide or wider than the engine mounting isolator. Isolator overhang and/or rounded stringer surfaces are detrimental to the isolators' ability to retain vibration.

Preformed fiberglass engine beds, when used, should be of sufficient thickness to properly support the engine and should be well-glassed to the hull when installed.

The temptation to install the engine on a pair of fiberglass angle irons must be resisted. Such construction will allow engine vibration to pass through to the hull. Flexible mounts require a firm foundation against which they must act if they are to perform their function. When possible, follow bed design **A** and avoid bed design **B** (refer to the illustration).

Supports between the bed stringers, and extending from the stringers to the hull, may be required for proper support and to aid in the absorption of vibrations.

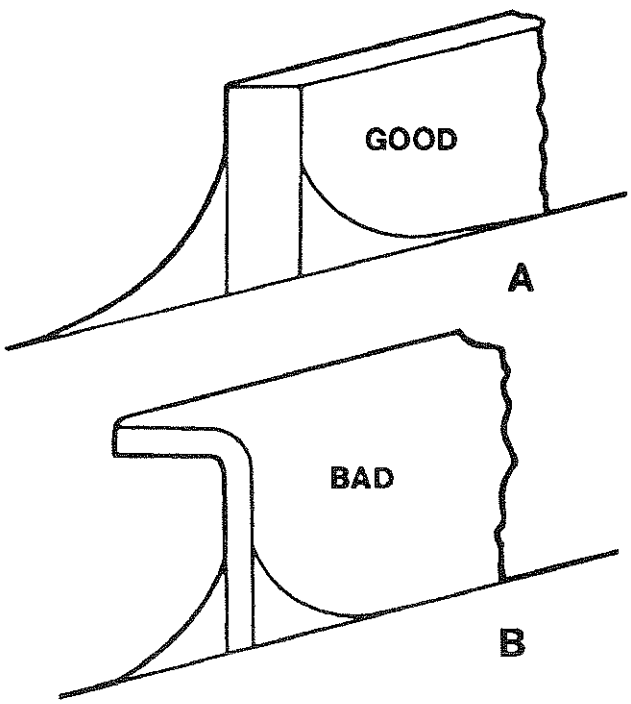

Note: Avoid excessive height, use solid stringer construction (A).

Propeller Shaft Coupling

The propeller shaft coupling fitted to the transmission's output flange must transmit not only the power of the engine to turn the propeller shaft and propeller, but must also transmit the thrust of the engine/transmission either ahead or astern.

The coupling bore should be carefully machined for a slight forced fit onto the shaft and an accurate mating surface for the coupling to the output flange of the transmission.

For all engine models, a propeller half-coupling, bored to shaft size for the specific order, is supplied. The coupling either has a keyway with set screws or is of the clamping type.

The forward end of the propeller shaft has a long straight keyway. Any burrs should be removed from the shaft's end. The coupling should be a light drive fit on the shaft and the shaft should not have to be scraped down or filed in order to get a fit. It is important that the key be properly fitted both to the shaft and to the coupling. The key should fit the side of the keyway closely, but should not touch the top of the keyway in the hub of the coupling.

If driving the coupling over the shaft is difficult, the coupling can be expanded by heating it in a pail of boiling water. The face of the propeller coupling must be exactly perpendicular to the centerline or axis of the propeller shaft.

Propeller

The type and size of propeller varies with the gear ratio and must be selected to fit the application, based upon boat tests. To utilize the full power of the engine, and to achieve ideal loading conditions, use a propeller which will permit the engine to reach its full rated RPM at full throttle while under a normal load and while it is moving the boat forward through the water.

Alignment of the Engine

The engine must be exactly aligned with the propeller shaft in the proper fashion. No matter what material is used to build a boat the material will be found to be flexible to some extent; hence, the boat's hull will change its shape to a greater extent than is usually realized when the boat is launched and operated in the water. Therefore, it becomes extremely important to check the engine's alignment at frequent intervals and to correct any errors when they appear.

Misalignment between the engine and the propeller shaft often creates serious problems which are often blamed on other areas suspected of causing the trouble. Misalignment will cause excessive bearing wear, rapid shaft wear and will, in many cases, reduce the life of the boat's hull by loosening the hull's fastenings. A bent propeller shaft will have the exact effect as those just stated; therefore, a perfectly straight propeller shaft is absolutely necessary. One particularly annoying result of misalignment may be leakage of transmission oil through the transmission's rear oil seal. If oil is leaking from this seal, check and make sure that the coupling's alignment is within the limits prescribed on page 25.

Never attempt a final alignment with the boat on land. The boat should be in the water and have had an opportunity to assume its final water form. The best time to perform the propeller shaft/transmission coupling alignment is with the fuel and water tanks about half full and all the usual equipment on board, and after the main mast has been stepped and the final rigging has been accomplished.

Take plenty of time in making this alignment and do not be satisfied with anything less than perfect results.

The alignment is correct when the shaft can be easily slipped backward and forward into the counterbore, and when a feeler gauge indicates that the flanges come together at all points. The alignment between the propeller shaft coupling and the engine's coupling can contain an error no greater than one thousandth of an inch per inch of the coupling diameter. For example, if your propeller shaft coupling is three inches in diameter, the maximum error that can be allowed in the alignment is three thousandths of an inch (.003).

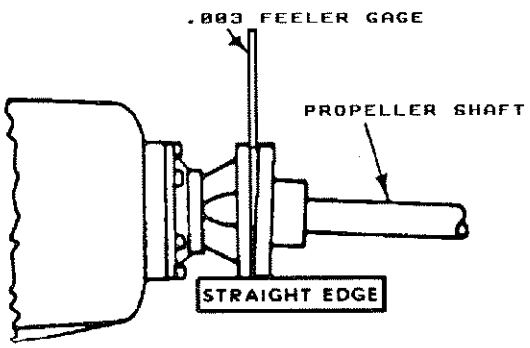

In making the final check for alignment, the engine's half coupling should be held in one position and the alignment with the propeller coupling tested with the propeller coupling in each of four positions (A), while rotated 90° between each position. This test will also check whether the propeller's half-coupling is in exact alignment on its shaft. Then, keeping the propeller coupling in one position, the alignment should be checked by rotating the engine's half-coupling in 90° increments, checking dimension **A** while in each 90° position until the half-coupling has been rotated full circle.

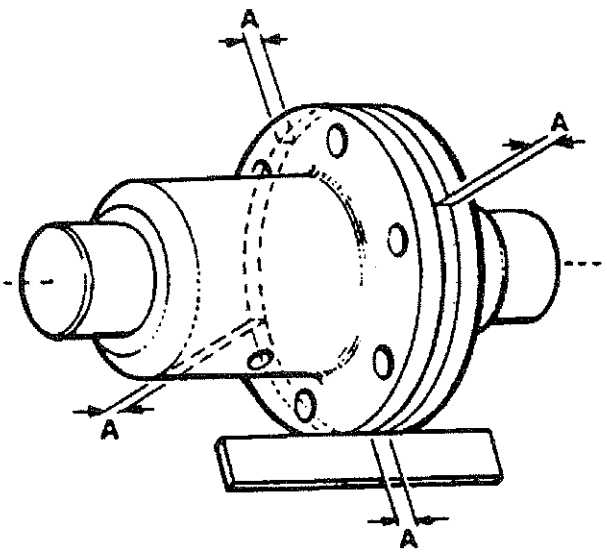

The engine's alignment should be rechecked after the boat has been in service for one to three weeks and, if necessary, perform the alignment again. Usually it will be found that the engine is no longer in alignment. This does not mean that the work has been done improperly at first; rather, it means that the boat has taken some time to take its final shape and that the engine's bed and stringers have probably absorbed some moisture. It may even be necessary to realign the coupling halves again at a later time.

Exhaust System

The exhaust system provides an outlet line to vent engine exhaust gases out of and away from the vessel. The system also discharges sea water which has passed through the engine's sea water circuit by mixing it with hot exhaust gases. This mixing helps cool the exhaust gases and exhaust elbow and plumbing. The exhaust system and the sea water supply to the exhaust *must* be configured to prevent the siphoning of sea water into the exhaust through the sea water cooling circuit and to prevent the entry of sea water into the exhaust through the circuit's through-hull discharge port. If not prevented, sea water entering through the discharge port can fill the exhaust system muffler and enter the engine's cylinders. This will prevent proper starting and possibly cause damage to internal engine components.

The sea water supply hose to the exhaust system water injection elbow should be routed (looped) at least 12 inches above the vessel water line. An anti-siphon break should be installed, when needed, at the top of this loop. The top of the loop should be placed high enough above the vessel's water line so as to remain above the water line when the vessel is underway, no matter what the angle of heel or roll may be.

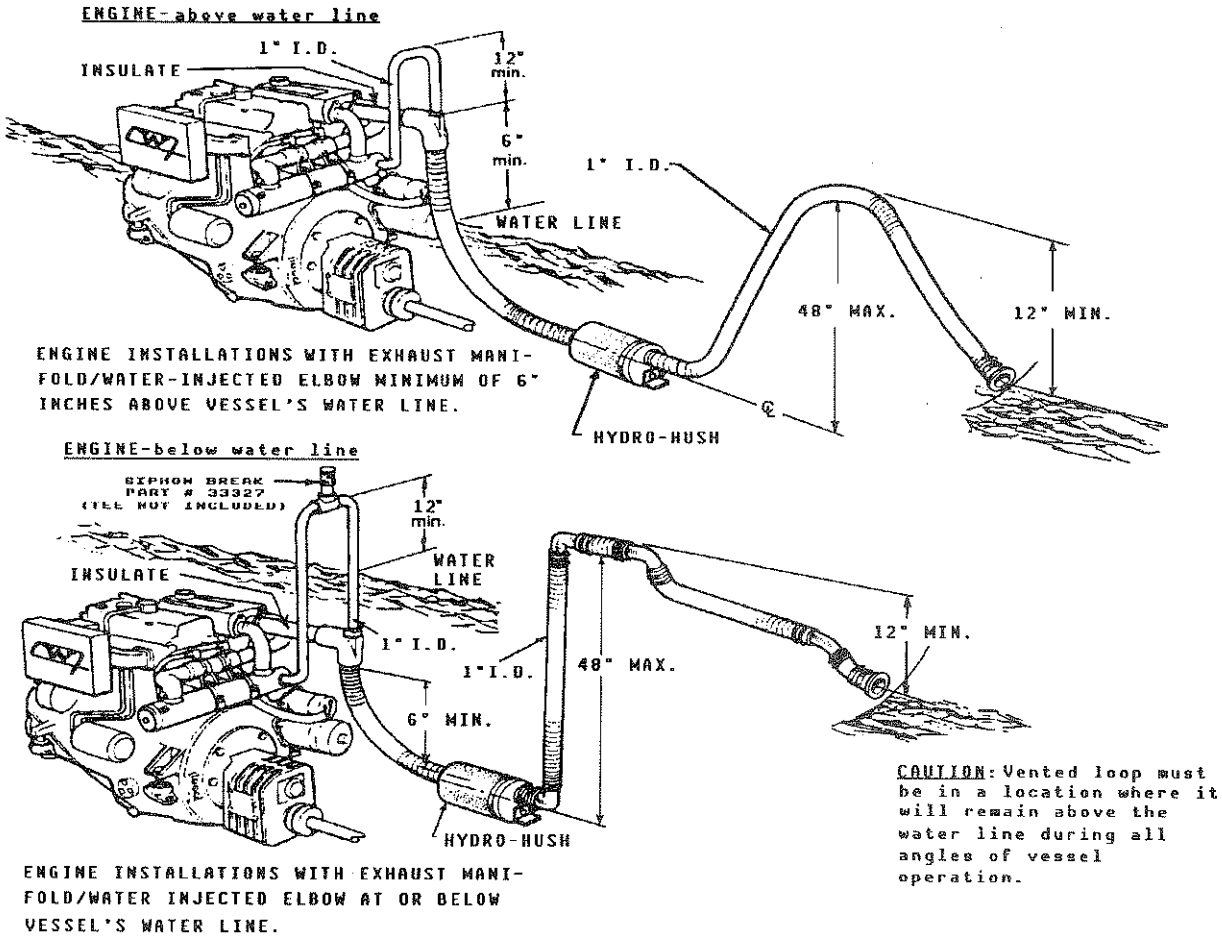

ENGINE INSTALLATIONS WITH EXHAUST MANIFOLD/WATER-INJECTED ELBOW MINIMUM OF 6" INCHES ABOVE VESSEL'S WATER LINE.

ENGINE INSTALLATIONS WITH EXHAUST MANIFOLD/WATER INJECTED ELBOW AT OR BELOW VESSEL'S WATER LINE.

The sea water supply through-hull sea cock fittings *must* be of the flush-hull type. High-speed scoop type of fittings should not be used as they tend to encourage siphoning.

The exhaust discharge from the water lift muffler should be routed well above the water line then downward to the through-hull discharge. This routing will prevent sea water entry if the through-hull discharge fitting becomes submerged when the vessel heels or rolls while under way, or is subjected to following sea conditions. Refer to the figures shown above for recommended exhaust system installations.

Exhaust Back-Pressure

The exhaust discharge hose must be of adequate size and minimal run to prevent excessive exhaust back-pressure. Exhaust back-pressure should be checked before the engine is put into service. (Refer to the illustration.) Excessive back-pressure will affect the engine's performance.

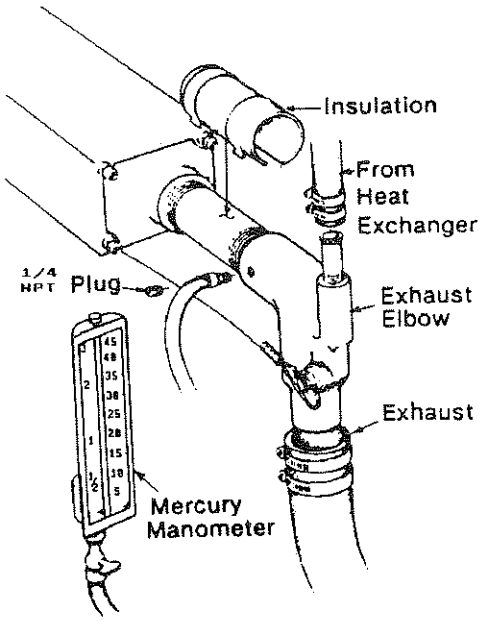

To measure for back-pressure, use a mercury manometer, a pressure gauge, or a water column. A boatyard or marine mechanic should have a manometer or a pressure gauge.

Measure back-pressure at the exhaust elbow when the engine is running at 3600 rpm. Back-pressure, as measured by a manometer, a pressure gauge, or water column, should not be over the specifications listed below.

> NOTE: Other pressure gauges may be available to test for exhaust back-pressure. Check with a competent mechanic.

A water column can be made by taking a clear plastic tube and taping one end of the tube along a yardstick and fitting the other end of the tube with a 1/4 inch NPT (National Pipe Tap) pipe fitting.

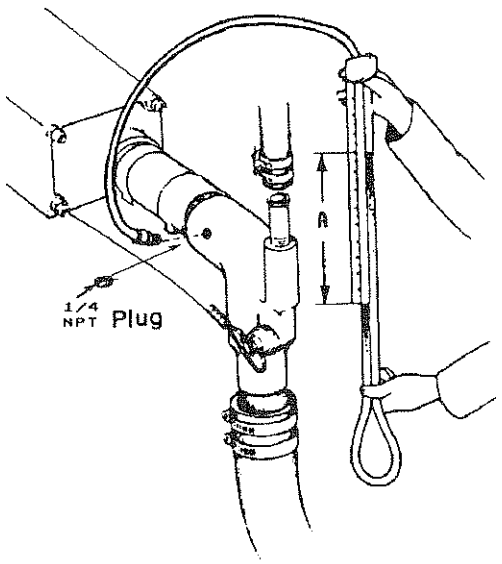

Measure back-pressure at the exhaust elbow when the engine is running at 3600 rpm.

Dimension **A** cannot exceed 39 inches of water.

Back-pressure, as measured by a gauge instrument, should not exceed the following specifications:

Specifications:

3 inches of mercury (0.104 kg/cm^2)
39 inches of water in a water column (.099 kg/cm^2 at 4° C)
22 ounces psi
1 1/2 psi

Excessive back-pressure can be caused by a small diameter exhaust hose, a small muffler, sharp bends in the exhaust hose, improper fittings, water pockets, and a high volume of water in the exhaust system due to the length of the exhaust discharge hose. The use of elbows and fittings in the exhaust discharge hose's routing should be limited since these will create flow restrictions and contribute to exhaust back-pressure. The engine's exhaust system must be separate from any other engine's exhaust system. Dry portions of the exhaust system between the engine's exhaust manifold and the water injected exhaust elbow must be insulated to hold in the heat.

Exhaust System Failures

When the engine's sea water is fed into an exhaust system so that the full stream of this water strikes a surface, erosion takes place. This erosion may cause premature failures. The proper design of either a water jacketed or water injected "wet" exhaust system to prevent this problem requires that the sea water inlet be positioned so that the entering stream of sea water does not directly strike a surface. In addition, the velocity of the entering sea water stream should be as low as possible, which can be achieved by having inlet fittings as big in diameter as possible.

The best protection against exhaust system leaks is to routinely inspect the complete exhaust system. Check for leaks around manifolds, gaskets, and welds. Make sure exhaust lines are not heating surrounding areas excessively. If excessive heat is present, correct the situation immediately. If you notice a change in the sound or appearance of the exhaust system, inspect the exhaust system and correct the cause.

Exhaust risers installed off the exhaust manifold should not exceed **8 lbs** in total weight when rigidly connected. Excessive weight and vibration can result in a manifold failure and/or the fracturing of the riser from the manifold at its attachment. Dry portions of the exhaust connected to the manifold, which lay before the water injected exhaust system, *MUST* be properly insulated to retain the exhaust heat within the exhaust pipe.

WARNING

Although diesel engine exhaust gases are not as toxic as exhaust fumes from gasoline engines, carbon monoxide is present in diesel exhaust fumes in less concentration. Carbon monoxide is a dangerous gas that can cause unconsciousness and is potentially lethal. Some of the symptoms or signs of carbon monoxide inhalation or poisoning are as follows:

- o Dizziness
- o Intense Headache
- o Weakness and Sleepiness
- o Vomiting
- o Muscular Twitching
- o Throbbing in Temples

If you experience any of the above symptoms, get out into fresh air immediately.

Make sure there are no unnecessary objects suspended from any portion of the exhaust lines. Excessive weight could cause deflection or distortion of the lines, resulting in damage or leaks. Inspect insulated portions of the exhaust system to make sure there is no deterioration of the insulation.

Exhaust Elbow Installation

The Westerbeke Corporation offers a 45°and 90°exhaust elbow as well as an exhaust riser you can install on your propulsion engine. Refer to the instructions below when installing the exhaust elbow purchased for your engine.

1. Coat only one side of the exhaust gasket with *"High Tack" adhesive sealant. Place this coated surface against the exhaust manifold's exhaust port flange (the gasket should stick to the flange without falling off).

2. Place the clamp over the elbow's flange. Place your exhaust elbow against the exhaust manifold's flange so the exhaust manifold's flange rests snug against the exhaust elbow's flange with the gasket centered between the two. Now slip the exhaust clamp over both flanges.

3. A. Tighten the clamp just enough so the exhaust elbow can remain attached to the manifold and still be rotated.

   B. The exhaust elbow discharge *must* be directed **downward** so the mixture of sea water and exhaust gases will flow/fall downward into the exhaust muffler which *must* be positioned below the exhaust elbow. There should be no loops or rises in the exhaust hose connected between the exhaust elbow and the muffler, as these would trap water and possibly allow water to flow back into the engine during starting or at shut down.

4. Adjust the elbow by rotating it until the desired alignment with the exhaust piping is acquired.

5. Carefully tighten the clamp between 2 to 3 lb-ft, or 24 to 35 lb-in, or 0.27 to 0.41 kg-m.

CAUTION

Approach the 3 lb-ft torque limit with caution. The clamp's threads will break if more than 3 lb-ft is applied to the clamp.

6. When the engine is started for the first time with the new elbow, check this exhaust manifold/elbow connection for leaks. If a leak exists, correct it immediately.

* Manufactured by Permatex Company, Brooklyn, N.Y.

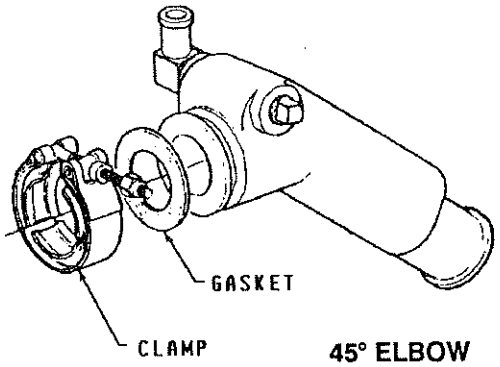

45° ELBOW

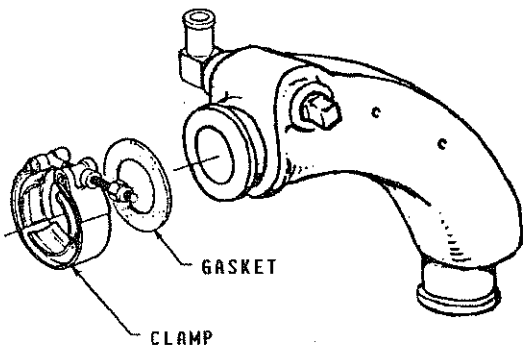

90° ELBOW

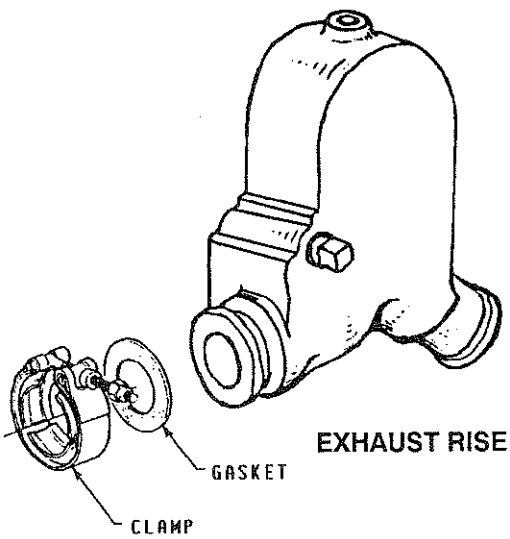

EXHAUST RISER

Oil Drain Hose

An oil sump drain hose is installed on the engine with the discharge end secured by a bracket at the front of the engine. Oil may be drained from this hose by removing the cap and the discharge end of the hose from the support bracket and lowering the hose into a container. The hose cap fitting is 1/4 inch NPT (National Pipe Tap) and can be extended, or have a pump added for easier removal of the old oil, if desired.

Connecting Pressure Sensing Devices to Oil Galleries

Oil pressure sensing devices, such as senders and switches, must not be connected to an engine's oil gallery with the use of extended nipples or tees. The reason is simply that continued engine vibration causes fatigue of the fittings used to make such a connection. If these fittings fail, the engine loses its oil pressure and quickly seizes.

When additional sensing devices such as switches or sensors need to be installed that function on engine oil pressure, these devices must be bulkhead-mounted and connected to the oil gallery using an appropriate grade of lubricating oil hose. Any fittings used to connect the hose to the gallery must be of steel or malleable iron composition. Brass must not be used for this application.

Cooling System

The engine is fresh water cooled by an engine-mounted heat exchanger. Sea water is used as the heat exchanger's cooling medium. Sea water is pumped into the exchanger by a sea water pump, where it cools the fresh water that circulates through the engine block, and is then injected into the exhaust discharge, carrying with it the heat removed from the engine's fresh water cooling system.

Sea water should be supplied to the sea water pump through a flush-type through-hull fitting using a wire-reinforced hose between the through-hull fitting and the sea water pump. The sea water should be directed through a visual-type sea water strainer, which will trap debris before it reaches the sea water pump and the heat exchanger, and then be delivered to the pump. Hoses routed from the through-hull fitting to the strainer and to the sea water pump should be wire-reinforced to prevent the hose from collapsing while the engine is running (suction from the pump may collapse a non-reinforced hose). The sea water strainer should be mounted at or below the water line to make sure the sea water line remains primed.

CAUTION

DO NOT use a scoop-type through-hull fitting as a means of supplying sea water to the engine. Water pressure against this type of fitting, while the vessel is under sail, can push sea water past the sea water pump's impeller into the engine's exhaust system, filling it and the engine as well. Flush-type, clear, through-hull fittings are recommended and should be located on the hull so as to be below the waterline during all angles of boat operation.

The use of common-type street elbows is not recommended for plumbing the sea water circuit. These generally have very restrictive inside diameters. Machine fittings are preferred.

Automatic Alarm System

High Water Temperature Alarm

A high water temperature alarm buzzer has been supplied with the instrument panel. If the engine's fresh water coolant reaches 205° F (96° C), a water temperature switch on the engine closes causing the alarm buzzer to emit a *continuous* signal. Refer to the "DESCRIPTION OF INSTRUMENT PANELS" section of this manual for the location of the alarm in your engine panel, page 35.

Low Oil Pressure Alarm

A low oil pressure alarm switch is located off the engine's oil gallery. This switch monitors the engine's oil pressure. Should the engine's oil pressure fall to 10 - 15 psi, the switch will close sounding this same alarm. In this event, the alarm will emit a *pulsating* signal. Refer to the "DESCRIPTION OF INSTRUMENT PANELS" section of this manual for the location of the alarm in your engine panel, page 35.

Sea Water Intake System

Make sure the intake system (sea water cooling system) is in proper order. Check that the hull inlet, sea cock and strainer are unobstructed. Sea cocks and strainers should be at least one size greater than the inlet thread of the sea water pump. The strainer should be of the type that may be withdrawn for cleaning while the vessel is at sea and should be mounted below the water line to ensure self-priming. Inspect the sea water lines to make sure there are no collapsed sections, which would restrict water flow. Make sure there are no air leaks at any of the connections.

Fuel System

The fuel system should be installed in such a manner as to allow the engine-mounted fuel lift pump to maintain a positive inlet pressure to the injection pump under all operating conditions. The minimum size of the fuel supply line and fuel return line is 1/4 inch, inside diameter, and there should be a primary fuel filter installed between the fuel tank and the fuel lift pump. Only one fuel filter is installed on the engine, between the mechanical fuel lift pump and the injection pump; this filter has a replaceable filter element.

The fuel tank's fuel pickup tube should be clear and unobstructed. No screens or gauze strainers should be incorporated in the fuel pickup tube.

Make sure that the fuel supply and return lines are securely anchored to prevent chafing and that all fittings are sufficiently tightened to prevent leaking. Also make sure your fuel system has a positive shut-off valve; know its location and how it operates.

> NOTE: **DO NOT** use spring-loaded check valves in the fuel supply line in lieu of mechanical shut-off valves. This type valve can create fuel starvation problems for the engine's fuel system.

Fuel tanks that are located below the engine's fuel system level must have its fuel return at the tank extending down into the tank in the same manner as the pickup tube, otherwise fuel siphoning out of the engine's fuel system through the return will take place.

Make sure the fuel tank filler is properly sealed to prevent water entry should it become awash. The fuel tank's vent should be routed so as to prevent water entry as well.

Be sure there is a fire extinguisher installed near the unit and that it is properly maintained. Be familiar with its use. An extinguisher with the NFPA rating of ABC is appropriate for all applications in this environment.

Electrical System

The electrical system should be checked to make sure all wiring harnesses are tied down properly with clamps or plastic ties, spaced at intervals close enough to prevent chafing from vibration. Check to make sure all the engine's harness connections are tight and that they are made to the appropriate terminals.

WARNING

> Do not smoke or allow an open flame near batteries. Lead acid batteries emit hydrogen, a highly-explosive gas. Turn off the emergency switch in the positive line of battery.

Make sure the positive (+) battery connection is connected to the battery connection of the starting solenoid. The negative (-) battery connection should be connected to the system ground (the engine block).

WARNING

> When servicing the battery or checking the electrolyte level, wear rubber gloves, a rubber apron, and eye protection. Battery acid may inadvertently splash on skin or into eyes when removing electrolyte caps.

Check level and specific gravity of battery electrolyte to ensure maximum engine starting efficiency. Make sure terminals are clean and tight.

Ventilation

The ventilation requirements of the engine include the following: combustion air is required for the engine's cylinders and ventilating air is required to clear the bilges below the engine, as well as the compartment in which the engine is located, of heated air produced during engine operation and of potentially toxic and flammable diesel fumes. Refer to the "SYSTEM SPECIFICATIONS" section of this manual for engine airflow requirements, page 13 for the W 35B, page 16 for the W 38B, and page 19 for the W 42B.

PREPARATION FOR STARTING

This section of the manual provides the operator with preparation, initial starting, break-in, starting (cold or warm), and stopping procedures. Follow the procedures as presented, for the conditions indicated, and your Westerbeke engine set will give you reliable performance and long service life.

Fill your engine with oil up to or near the upper limit on the dipstick (the installation angle may have an effect on the dipstick reading). Select readily available lubricating oil with an API specification of CC or CD and an SAE number suitable for the temperature in your operating area (see page 60). For the quantity of oil needed in your engine, refer to the "SYSTEM SPECIFICATION" section of this manual, page 13 for the W 35B, page 16 for the W 38B, and page 19 for the W 42B.

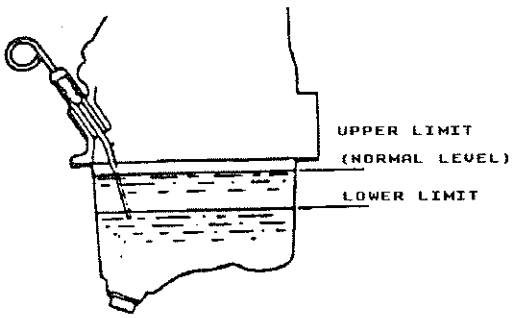

Fill the JS transmission to the **FULL** mark on the dipstick with the correct lubricant. (The JS transmission takes 1 U.S. qt or 1 liter of oil. Refer to your engine's "SYSTEM SPECIFICATION" section of this manual for a listing of oil grades to be used in this engine.)

Each unit is supplied with a coolant recovery kit (#24977) as standard equipment, to which the following applies:

A. Remove the pressure cap from the engine's exhaust manifold and slowly fill the engine's cooling system with a mixture of water and antifreeze suitable for your temperature zone. (See the "COOLING SYSTEM" section of this manual, page 53.) Operate the engine and observe the coolant level in the manifold. Maintain this level to the base of the filler neck. Once the engine reaches its operating temperature (170 - 190° F), make sure there is coolant flow to the domestic water heaters when installed. Top off the cooling system and install the pressure cap.

B. Make sure the plastic recovery tank is properly mounted near the unit (with the bracket provided), in a location where it can be monitored and filled easily. The recovery tank should be mounted at manifold level or above. In these installations that require it, the plastic recovery tank can be mounted below the exhaust manifold's level.

C. Add coolant to the plastic tank after the engine has been started and after the engine's operating temperature has been reached to make sure all air is expelled from the manifold and the engine's cooling system. With the manifold filled and the pressure cap installed, fill the plastic recovery tank half full. Monitor daily and add coolant as needed.

Fill the fuel tank with a good grade of No. 2 diesel fuel and prime the fuel system up to the engine (see page 44). When returning fuel is free of air, the engine's fuel system is bled and the engine is ready to start.

NOTE: When the PREHEAT switch is depressed, the glow plugs in the cylinder head are energized; use the PREHEAT switch intermittently to prevent overheating the glow plugs.

Make sure the Installation Checks have been made in accordance with those specified in the "INSTALLATION CHECKS" section of this manual (refer to page 21).

Description of Starting System

Westerbeke diesel engines use electric starters assisted by glow plugs for both normal and cold weather starting. The figure below shows a cross-sectional view of one cylinder. The glow plug is located in the combustion chamber so that its tip is in the injector nozzle's spray path. When the glow plug is energized by the PREHEAT button, the plug glows red at the tip and assists in igniting the fuel. The result is a rapid start with less wear on the starter.

This system is common to Westerbeke Diesels. The start circuitry is designed so that the PREHEAT button must be depressed for the time specified in the "Preheat" chart shown on page 39 . Then, while keeping the PREHEAT button engaged, the START button is depressed to crank the engine.

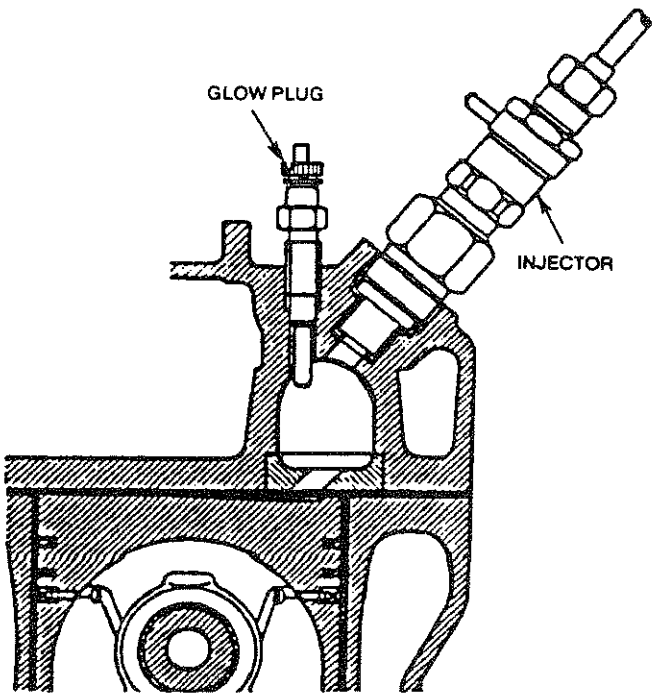

Combustion Chamber

NOTE: The START button will not energize unless the PREHEAT button is depressed. When depressing the preheat switch, we are activating the glow plugs in the cylinder head, so use the preheat intermittently so as not to overheat the glow plugs.

DESCRIPTION OF INSTRUMENT PANELS

Westerbeke offers two types of control panels as optional equipment for the W 35B, the W 38B, and the W 42B engines. Read the following instructions that apply to the panel you purchased with your engine.

Captains Panel

General

The manually-operated Captains Panel is equipped with a Key Switch, an RPM gauge, a PREHEAT and START button, and an instrument test button along with a low oil pressure/high water temperature alarm. The RPM gauge is illuminated when the key switch is turned ON and remains illuminated while the engine is in operation. The key switch and the three buttons serve the following functions:

1. Key Switch: The Key Switch provides power only to the instrument panel cluster. Refer to the "STOPPING PROCEDURE" section of this manual, page 41.

2. PREHEAT: The PREHEAT button energizes the alternator's regulator, the engine's glow plugs, and bypasses the engine's oil pressure alarm switch. In addition, this button energizes the START button.

3. START: The START button, when pressed, energizes the starter's solenoid which cranks the engine. This button will not operate electrically unless the PREHEAT button is pressed and held at the same time.

4. Test Button: The Test Button, located above the Key Switch, tests the alternator, the oil pressure, and the water temperature control circuits. When this button is pressed, the alternator, the oil pressure, and the water temperature indicator lights illuminate in addition to sounding the alarm.

5. Alarm: The alarm is located above the test button and will sound if the engine's oil pressure falls below 15 psi. In this event, the alarm will emit a *pulsating* signal. The alarm will also sound if the water temperature in the fresh water cooling circuit rises to 210° F. In this event, the alarm will emit *continuous* signal.

*6. Water Temperature Gauge: This gauge is graduated in degrees Fahrenheit and is illuminated while the Key Switch is turned ON. The engine's normal operating temperature is 170 - 190° F (77 - 88°C).

*7. Oil Pressure Gauge: This gauge is graduated in pounds per square inch (PSI) and is illuminated while the Key Switch is turned ON. The engine's normal operating oil pressure ranges between 30 - 60 PSI.

*NOTE: When the engine is manually shut down, and the engine's Key Switch is turned OFF, the water temperature gauge will continue to register the last temperature reading indicated by the gauge before electrical power was turned OFF. The temperature gauge will once again register the engine's true temperature once electrical power is restored to the gauge. The oil pressure gauge will fall to zero when the engine is manually shut down.

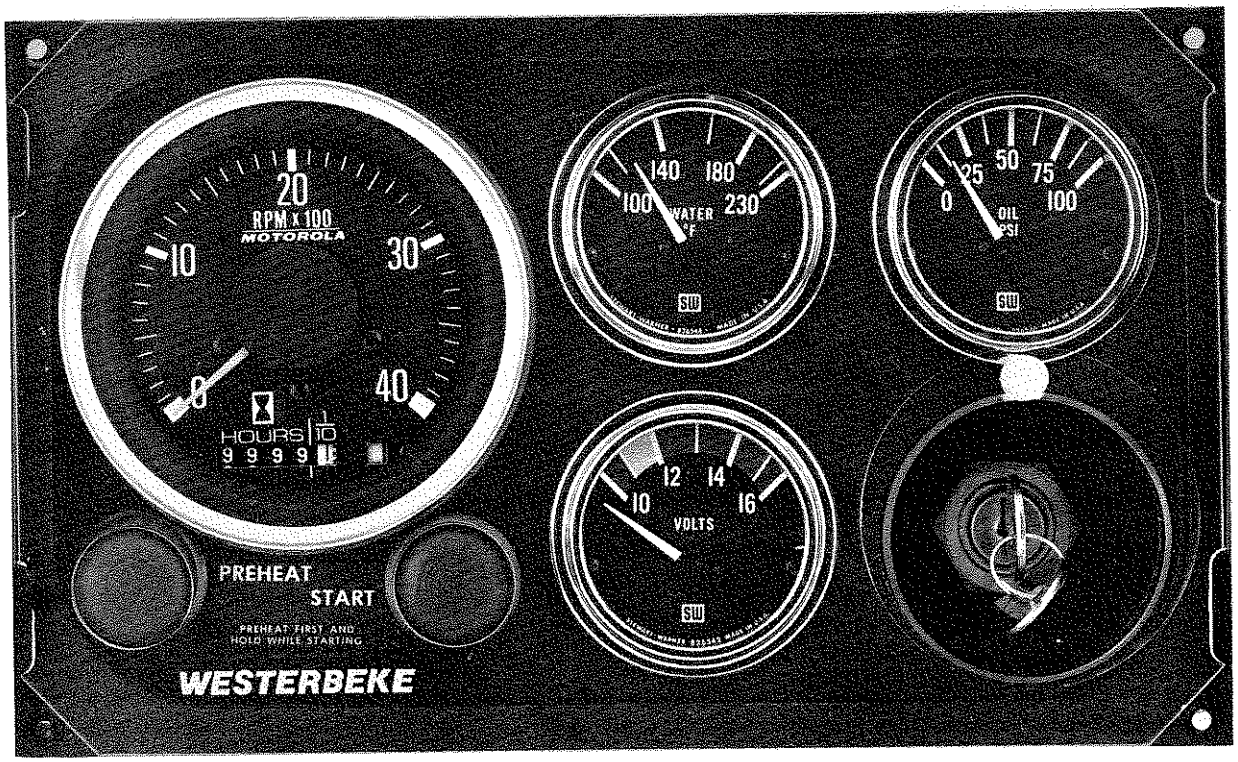

Admirals Panel

General

The manually-controlled Admirals Panel is equipped with a Key Switch and an RPM gauge with an ELAPSED TIME meter which measures the engine's running time in HOURS and in 1/10 hours. The panel also includes a water temperature gauge which indicates water temperature in degrees Fahrenheit (WATER ° F), an oil pressure gauge which measures the engine's oil pressure in pounds per square inch (OIL PSI), and a DC control circuit voltage gauge which measures the system's voltage (VOLTS). All gauges are illuminated when the key switch is turned ON and remain illuminated while the engine is in operation. The panel also contains two rubber-booted push buttons, one for PREHEAT and one for START.

1. Key Switch: The Key Switch provides power only to the instrument cluster. Refer to the "STOPPING PROCEDURE" section of this manual, page 41.

2. PREHEAT: The PREHEAT button activates the alternator's exciter, the engine's glow plugs, and bypasses the engine's protective oil pressure switch. In addition, this button is energizes the START button.

3. START: The START button, when pressed, energizes the starter's solenoid which cranks the engine. This button will not operate electrically unless the PREHEAT button is pressed and held at the same time.

NOTE: An alarm buzzer is supplied with every Admiral Panel. The installer is responsible for electrically connecting the buzzer to the four-pin connection on the engine's electrical harness. The installer is also responsible for installing the buzzer in a dry location so that it will be audible to the operator should it sound while the engine is running. The buzzer will sound when the ignition key is turned ON and should silence when the engine has started and when the engine's oil pressure rises above 15 psi.

*5. Water Temperature Gauge: This gauge is graduated in degrees Fahrenheit and is illuminated while the Key Switch is turned ON. The engine's normal operating temperature is 170 - 190° F (77 - 88°C).

*6. Oil Pressure Gauge: This gauge is graduated in pounds per square inch (PSI) and is illuminated while the Key Switch is turned ON. The engine's normal operating oil pressure ranges between 30 - 60 PSI.

*NOTE: When the engine is manually shut down, and the engine's Key Switch is turned OFF, the water temperature gauge will continue to register the last temperature reading indicated by the gauge before electrical power was turned OFF. The temperature gauge will once again register the engine's true temperature once electrical power is restored to the gauge. The oil pressure gauge will fall to zero when the engine is manually shut down.

STARTING PROCEDURE

1. Place the transmission in the NEUTRAL position and advance the throttle to its full open position for a cold engine, and partially open for a warm engine.

2. Turn the Key Switch to the ON position (2 o'clock). Make sure the push/pull stop lever has been returned to the RUN position.

3. Depress and hold the PREHEAT switch. Preheat according to the following chart:

Atmospheric Temperature	Preheating Time
+ 41° F (+ 5° C) or higher	Approx. 10 sec.
+ 41° F (+ 5° C) to + 23° F (- 5° C)	Approx. 20 sec.
+ 23° F (- 5° C) or lower	Approx. 30 sec.
Limit of continuous use	30 seconds before cranking

Proper glow plug function is indicated by a voltmeter drop when the PREHEAT switch is depressed. This drop will be slight but discernible. If no voltage drop is noted, it may indicate defective glow plugs or a faulty preheat circuit (check for loose connections).

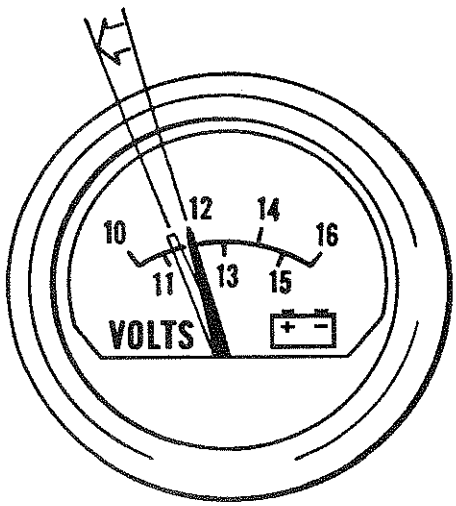

While holding the PREHEAT button depressed, depress the START button. The starter motor will run, thereby cranking the engine. As soon as the engine runs, release the START button and PREHEAT button. Check your instrumentation for proper engine operation. Make sure sea water discharges with the exhaust discharge.

Should the engine not start when the START button is depressed for 10 to 12 seconds, release both buttons and wait 30 seconds; repeat the previous procedure. Never run the starter motor for more than 30 seconds at a time.

CAUTION

Prolonged cranking intervals without the engine starting can result in filling the engine-mounted exhaust system with sea water coolant. This may happen because the sea water pump is pumping sea water through the sea water cooling system during cranking. This sea water can enter the engine's cylinder's by way of the exhaust manifold once the exhaust system fills. Prevent this from happening by closing the sea water supply through-hull shut-off, drain the exhaust muffler, and correct the cause for the excessive engine cranking needed to obtain a start. Engine damage resulting from this type of sea water entry is not a warrantable issue; the owner/operator should keep this in mind.

Once the engine starts, run it at idle for a few minutes to warm up the engine and check instruments for proper oil pressure and battery charging voltage. Never attempt to engage the starter while the engine is running.

NOTE: Some unstable running may occur in a cold engine, but this condition should smooth out as the operating temperature of 130 - 150° F (55 - 66° C) is reached.

STOPPING PROCEDURES

A manual pull type stop control (tee handle or knob) is provided by the installer in a location close to the engine's controls. Know the location of this control before attempting to start the engine. To stop the engine, pull out on this tee handle or knob fully and hold it out until the engine comes to a complete stop. Push back on this control to return it to the engine run position otherwise the engine will not restart.

With the engine stopped, turn the Key Switch to the OFF position (12 o'clock). If the Key Switch is left ON, the battery will discharge. The alarm buzzer will sound in the Admirals Panel but not in the Captains Panel should the Key Switch be left ON. The best method of preventing the battery from discharge is to remove the key from the Key Switch after stopping the engine.

CAUTION

> **DO NOT** attempt to shutdown the engine by turning the Key Switch OFF. The Key Switch only provides power to the instrument panel: the engine will continue running even if the Key Switch is turned OFF.

(An optional key shut-off package is available, however. This option allows the operator to shut-off the engine by turning the Key Switch OFF which turns OFF an electrically run Fuel Run Solenoid. This electrical shut-off option is installed at the factory upon the specific request/order of the purchaser.)

Engine Break-In Procedures

Although your engine has experienced a minimum of one hour of test operations to make sure accurate assembly procedures were followed and that the engine operated properly, a break-in time is required. The service life of your engine is dependent upon how the engine is operated and serviced during its initial hours of use.

Your new engine requires approximately 50 hours of initial conditioning operation to break in each moving part in order to maximize the performance and service life of the engine. Perform this conditioning carefully, keeping in mind the following:

1. Start the engine according to the "STARTING PROCEDURE" section found on page 39; run the engine at fast idle while checking that all systems (sea water pump, oil pressure, battery charging) are functioning.

2. Allow the engine to warm up (preferably by running at fast idle) until the water temperature gauge moves into the 130-140° F range.

3. While using the vessel, run the engine at varying engine speeds for the first 25 hours.

4. Avoid rapid acceleration, especially with a cold engine.

5. Use caution not to overload the engine. The presence of a gray or black exhaust, and the inability of the engine to reach its full rated speed, are signs of an overload (that is, operating the engine with a propeller that is too large).

6. During the next 25 hours, the engine may be operated at varying engine speeds, with short runs at full rated speed. Avoid idling the engine for prolonged periods of time.

Breaking-in a new engine basically involves seating the piston rings to the cylinder walls. This cannot be accomplished by long periods of running at Idle, nor by early running at full speed.

Idle running may glaze the cylinder walls, resulting in excessive oil consumption and smoky operation. Excessive speed or heavy overloading, especially with a cold engine, may cause scoring of the cylinder walls, producing similar results.

As indicated above, operate the engine in moderation during the 50-hour break-in period. (On one hand don't baby the engine, but on the other hand, however, don't abuse it.)

Starting Under Normal Conditions

Follow the procedure below for normal starting of the engine:

1. Check the engine and transmission lubricant levels and fill, if necessary.

2. Make sure there is sufficient fuel on board. Keep fuel tank(s) as full as possible. Check the fuel filters and water separators for the presence of contaminants and/or water. Drain and clean them as needed.

3. Check the coolant level in the plastic recovery tank. Add coolant solution as needed.

   NOTE: Excessive loss of coolant from the plastic recovery tank indicates a cooling system leak. Check the entire cooling system and pressurize the system to locate the leak. In cases of excessive coolant loss, the system must be refilled as outlined under the "PREPARATION FOR STARTING" section of this manual, page 33.

4. Check for oil and fuel leaks, particularly if signs of such leaks are found on the bottom of the engine or below the engine.

Start the engine in accordance with the "STARTING PROCEDURE" instructions found on page 39, and allow the engine's operating temperature to reach 140 - 150° F before operating the engine underway.

Starting Under Cold Conditions

Under extremely cold temperatures, the following conditions can occur. Follow the instructions listed below when operating your engine in cold weather.

LUBRICATING OIL TURNS VISCOUS - Make certain that the lubricating oil used conforms with the ratings for the prevailing atmospheric temperature. Refer to the "LUBRICATION SYSTEM" section of this manual, page 60 for an atmospheric/oil viscosity specification table.

VOLTAGE ACROSS THE BATTERY TERMINALS DROPS - Make certain that the battery is fully charged to minimize voltage drop across the battery terminals.

THE TEMPERATURE OF THE INTAKE AIR IS LOW AND THE COMPRESSION TEMPERATURE DOES NOT RISE ENOUGH - Allow the glow plugs to operate sufficiently to aid in starting during the preheat period whenever the temperature of the intake air is low and when the compression temperature does not rise enough. Refer to the preheat chart found in the "STARTING PROCEDURE" section, page 39.

FUEL SYSTEM

Diesel Fuel

Use No. 2 diesel fuel with a cetane rating of 45 or higher. Never use kerosene or home heating oil since these fuels do not have the same lubricating properties as No. 2 diesel fuel.

In cold weather particularly, water vapor is produced by condensation when air is present in the fuel tank. Keep fuel tank(s) full and completely free of dirt and water.

Fuel Filters

A primary fuel filter of the water entrapment type must be installed between the fuel tank and the engine. A primary fuel filter, shown here, is available from your local Westerbeke representative or your boatbuilder. This filter, adapted for boatbuilder use, comes complete with fittings for either hose or metal tubing. Mount it in an accessible place, inspect it often and drain off water accumulation frequently.

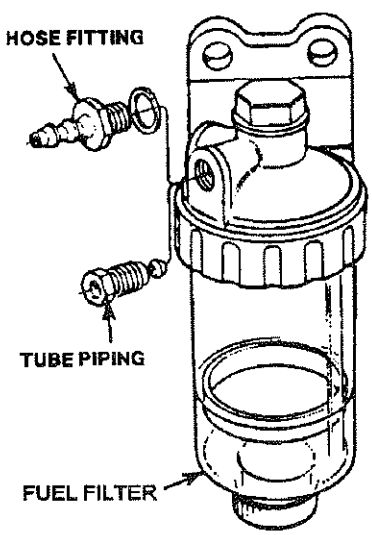

INSTALLATION INSTRUCTIONS

1. BOLT SEDIMENT/WATER TRAP SECURELY TO AN ACCESSIBLE STRUCTURE SO POSITIONED THAT A RECEPTICLE TO CATCH DRAINAGE CAN BE PLACED UNDER IT.
2. IF FUEL IS TO BE PIPED WITH COPPER, OR BUNDY TUBING, USE NUTS AND FERRULES PROVIDED. BE SURE THE TUBING PROJECTS 1/4 INCH THROUGH THE FERRULE BEFORE TIGHTENING THE NUT.
3. IF FUEL IS TO BE PIPED WITH HOSE, USE THE TWO BRASS BARBED FITTINGS AND WASHERS SUPPLIED. BE CERTAIN THAT THE HOSE SELECTED HAS DIAGONAL BRAID INSERTED (TO CLING ON THE BARB), THAT IT IS NEOPRENE LINED, AND THAT IT IS USCG APPROVED.
4. IF WATER IS PRESENT IN THE FUEL, IT WILL COLLECT SLOWLY IN THE BOTTOM OF THE SEDIMENTER. WHEN THE RED FLOAT RING REACHES THE DRAIN LINE ON THE PLASTIC BOWL, LOOSEN THE BOTTOM DRAIN PLUG UNTIL ALL WATER RUNS OUT.
5. TIGHTEN DRAIN PLUG SECURELY SO NO AIR CAN ENTER THE SYSTEM.
6. ENERGIZE THE FUEL PUMP TO REFILL THE BOWL.

If a water trap type filter is not installed between the fuel tank and the engine-mounted fuel system, any water in the fuel system will tend to lay in the bottom of the electric lift pump. Internal metal parts of the lift pump will rust. Particles will pass on to filters and eventually to the injection pump and injectors with damaging results and the possibility of expensive repairs. Remember, water damage to the fuel system is not covered under the Westerbeke warranty.

In addition, any gasoline in the fuel system will damage the engine's fuel injection pump assembly and injectors, as gasoline does not have the same lubricating qualities as diesel fuel.

Although most boatbuilders supply a water trap/filter, some do not. Westerbeke offers a sedimentary/water trap/filter as an optional extra at moderate cost. The filter is supplied with fittings for either hose or metal tubing fuel lines.

Priming the Fuel System

The Westerbeke self-bleeding fuel system is semiautomatic in operation. The self-bleeding feature of the fuel system allows for easy servicing of the fuel filters. Simply remove the and replace the filter elements (take care in catching any fuel that may drain out of the fuel filtering assemblies) as described in the "Replacing the Fuel Filter Elements" section below. Energize the PREHEAT switch and allow the electric fuel pump to operate for 20 to 30 seconds to prime and bleed air from the system. (No fittings should be opened.) Then proceed to start the engine as you normally would. If the engine does not start, stop and wait a few moments, and then repeat the bleed procedure as indicated above. When the PREHEAT switch is depressed, the preheat elements (the glow plugs) are energized, so take care not to over heat them.

CAUTION

Prolonged cranking intervals without the engine starting can result in filling the engine-mounted exhaust system with sea water coolant. This may happen because the sea water pump is pumping sea water through the sea water cooling system during cranking. This sea water can enter the engine's cylinders by way of the exhaust manifold once the exhaust system fills. Prevent this from happening by closing the sea water supply through-hull shut-off, drain the exhaust muffler, and correct the cause for the excessive engine cranking needed to obtain a start. Engine damage resulting from this type of sea water entry is not a warrantable issue; the owner/operator should keep this in mind.

Replacing the Fuel Filter Elements

While it is unlikely that the operator will be forced to service the system at sea, the possibility does exist. Therefore, it is recommended that banjo washers, injector seat washers, electric lift pump filter and gasket, fuel filter and gasket be carried on board at all times. Select the parts for your engine from the Parts List and purchase spares from your local Westerbeke Dealer or Distributor. For example, hardware kit #33093 includes replacement elements with gaskets (items #6, 8, 20, 21). If a leak should develop at a fuel banjo or sealing washer location that cannot be remedied by a slight tightening of the filter cup retainer, replace the filter along with the O-rings supplied with the new filter.

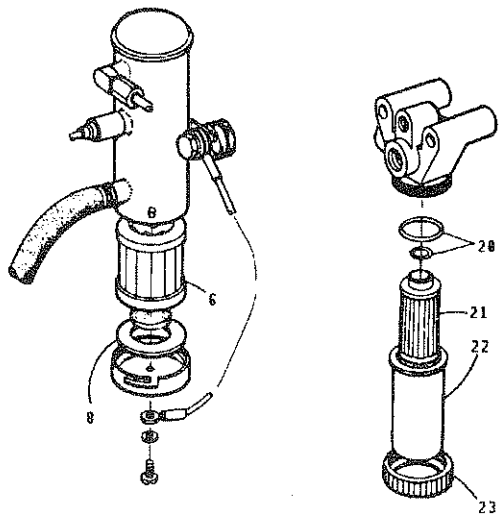

After the first 50 hours of operation, loosen retainer ring # 23 and discard filter element # 21. Clean bowl # 22 and install a new filter using a new # 20 gasket. *Be careful to catch any fuel that may spill from within these fuel filter assemblies.* This same service is required of the # 6 filter element in the electric fuel lift pump. Similarly, install a new # 6 filter element along with a new # 8 gasket. The base of the electric fuel pump is removed with the aid of an open end wrench. Twist the base off the pump's locking tabs and reinstall the base by twisting it back on the locking tabs. Place the wrench on the hex nut cast into the base.

After the first 50-hour change, the change period may be increased to 200 hours or once per season.

Fuel Injection Pump

The illustration below shows the W 35B THREE's fuel system. The W 38B FOUR and W 42B FOUR's fuel system differ in that they have an additional fuel injector and injector pump plunger. The fuel injection pump, located to the right, is one of the most important components of the diesel engine and, therefore, calls for the utmost caution in handling. Furthermore, the fuel injection pump has been thoroughly bench-tested and should not be tampered with.

Idle speed and timing adjustment are the only adjustments the servicing dealer can perform on the injection pump. Other types of adjustments or repairs must be performed by a qualified injection service shop.

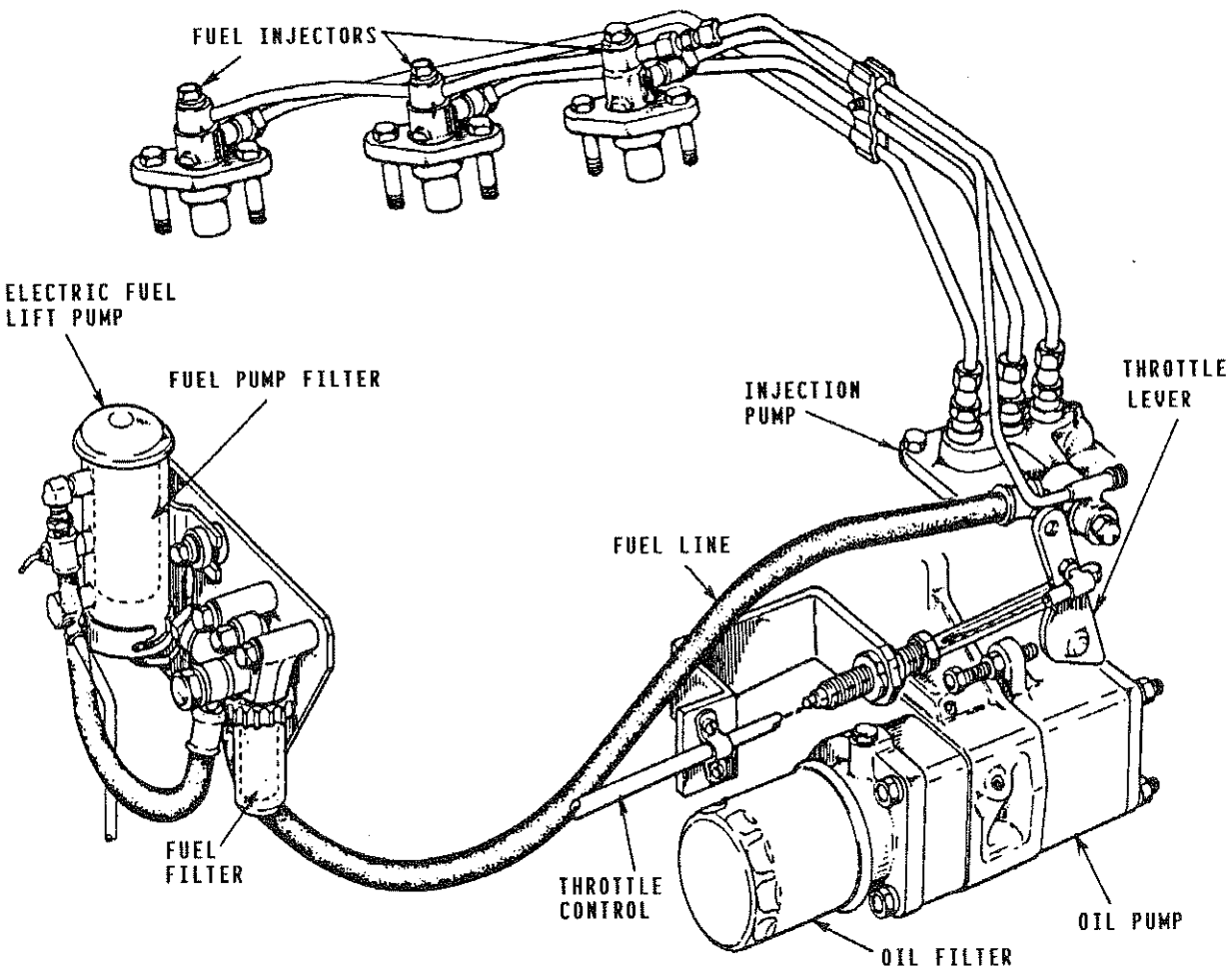

Fuel Injection System

To obtain long and satisfactory service from the injection pump, always use fuel which is free from impurities and maintain a good filtration and water separation system between the fuel tank and engine. Service this system regularly: the injection pump it saves will be your own.

ELECTRICAL SYSTEM

Engine 12-Volt DC Control Circuit

The Westerbeke 35B, 38B and 42B propulsion engines have a 12-Volt DC electrical control circuit, as shown on the wiring diagrams which follow on pages 48 to 51. Refer to these diagrams when troubleshooting or servicing electrical components on the engine.

CAUTION

To avoid damage to the battery charging circuit, never shut off the engine battery switch while the engine is running.

Shut off the engine battery switch, however, to avoid electrical shorts when working on the engine electrical circuit.

Battery Specification

The minimum recommended capacity of the battery used in the engine's 12-Volt DC control circuit is 90 - 125 Ampere-hours (minimum).

CAUTION

When quick-charging the battery with an external charger, be sure to disconnect the battery cables from the battery. Leaving the charging circuit connected while quick-charging will damage the alternator's diodes.

Alternator

CAUTION

When testing the alternator circuit (charging circuit), do not use a high-voltage tester such as a megger; damaged diodes could result.

During high-speed operation of the engine, do not disconnect the positive terminal of the battery from the **B** terminal of the alternator, nor disconnect the negative terminal of the battery from the ground.

When cleaning the engine with a steam cleaner, be careful to keep steam away from the alternator.

Refer to pages 48 to 51 for the two electrical system wiring schematics (one is used for the Captains panel and the other for the Admirals Panel).

The charging system consists of an alternator with an internal voltage regulator, an engine-mounted circuit breaker, a battery and connecting wires.

Because of the use of IC's (integrated circuits), the electronic voltage regulator is very compact and is built into the rear bracket of the alternator.

Charging Voltage Test

If you suspect that the alternator is not producing enough voltage to charge the engine's battery, perform the following voltage test.

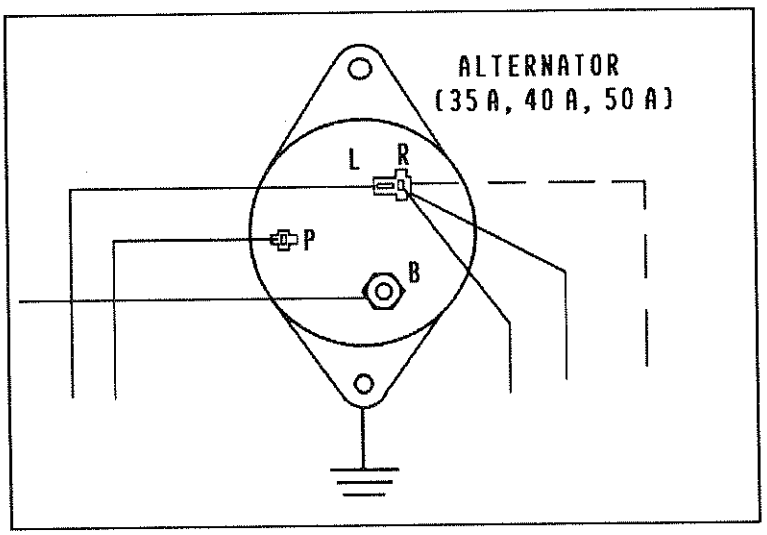

Interconnections for Charging Voltage Test

1. Using a voltmeter, connect the voltmeter's red wire clip to the **B** output terminal on the alternator. Refer to the schematic shown above.

2. Connect the other wire clip to a ground on the engine.

3. Start the engine and increase the engine's speed to 2000 rpm. Now record the reading given by the voltmeter.

The voltage reading for a properly operating alternator should be between 13.5 to 14.5 volts. If your alternator is over or under charging, have it replaced or rebuilt by a reliable service shop.

> Note: Before removing the alternator for repair, make sure 12-Volts excitation is present at the **R** terminal should the above test show only battery voltage at the **B** output terminal.

Captains Panel DC Control Circuit Wiring Diagram #36467
page 1 of 2

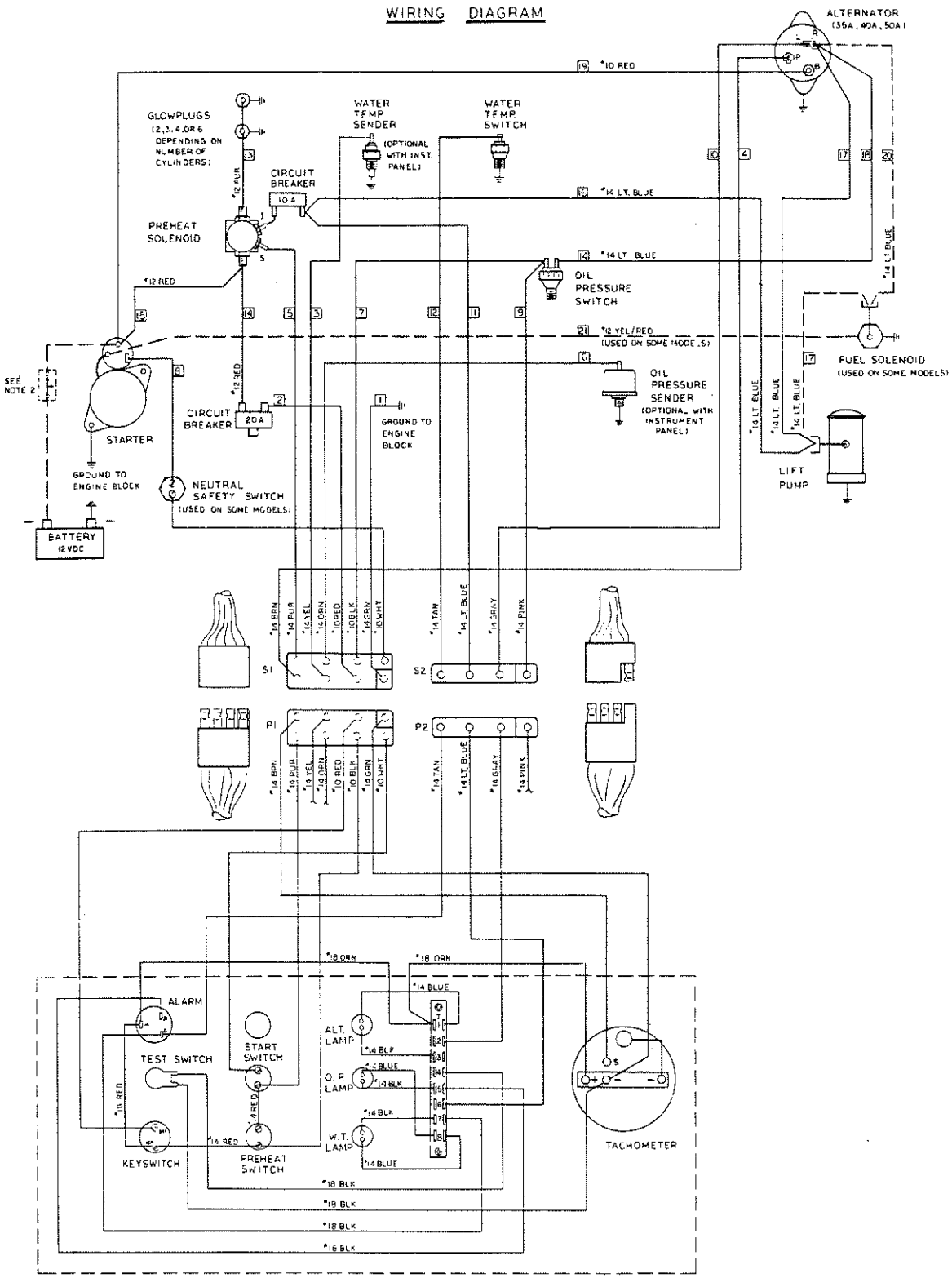

Captains Panel DC Control Circuit Wiring Diagram #36467
page 2 of 2

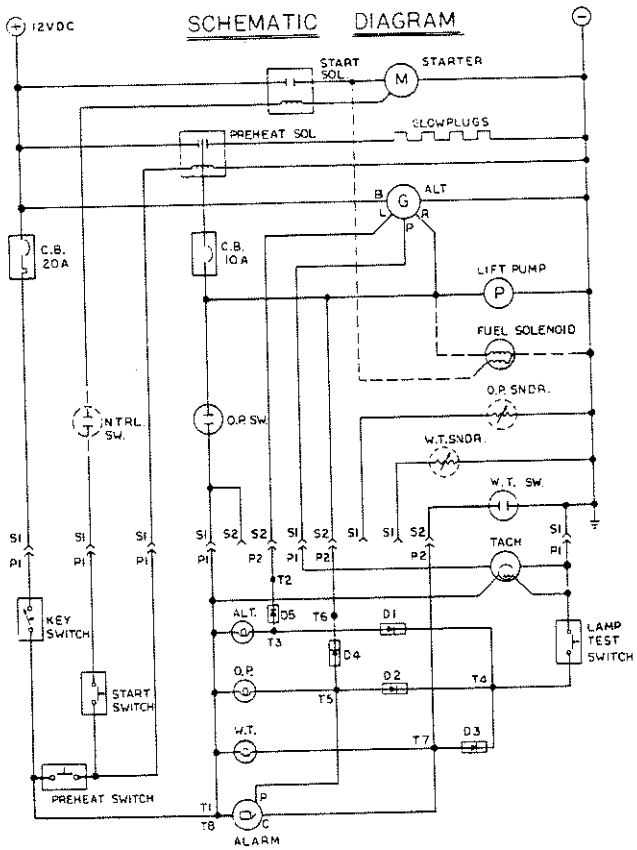

START: 1. TURN KEY TO ON POSITION. THE ALARM WILL SOUND, OIL PRESSURE AND BATTERY CHARGE INDICATORS WILL LIGHT.

2. PUSH PREHEAT SWITCH FOR 15 TO 60 SECONDS AS REQUIRED, ALARM WILL STOP.

3. WHILE CONTINUING TO PUSH PREHEAT SWITCH, PUSH THE START SWITCH ALSO. WHEN THE ENGINE STARTS RELEASE THE START SWITCH ONLY.

4. WHEN THE OIL PRESSURE INDICATOR LAMP GOES OUT RELEASE THE PREHEAT SWITCH.

STOP: TURN THE KEY TO THE OFF POSITION.

NOTES:

1. THIS PRODUCT IS PROTECTED BY A MANUAL RESET CIRCUIT BREAKER LOCATED NEAR THE STARTER. EXCESSIVE CURRENT DRAIN WILL CAUSE THE BREAKER TO TRIP AND THE ENGINE WILL SHUT DOWN. THE BUILDER/OWNER MUST BE SURE THAT THE INSTRUMENT PANEL, WIRING AND ENGINE ARE INSTALLED TO PREVENT CONTACT BETWEEN ELECTRICAL DEVICES AND SALTWATER.

2. AN ON-OFF SWITCH SHOULD BE INSTALLED BETWEEN THE BATTERY AND STARTER TO DISCONNECT THE BATTERY IN AN EMERGENCY AND WHEN LEAVING THE BOAT. A SWITCH WITH A CONTINUOUS RATING OF 175 AMPS AT 12VDC WILL SERVE THIS FUNCTION. THIS SWITCH SHOULD NOT BE USED TO MAKE OR BREAK THE CIRCUIT.

3. PINK WIRE AT PLUG 2 IS UNUSED AND SHOULD BE INSULATED.

Admirals Panel DC Control Circuit Wiring Diagram #36844
page 1 of 2

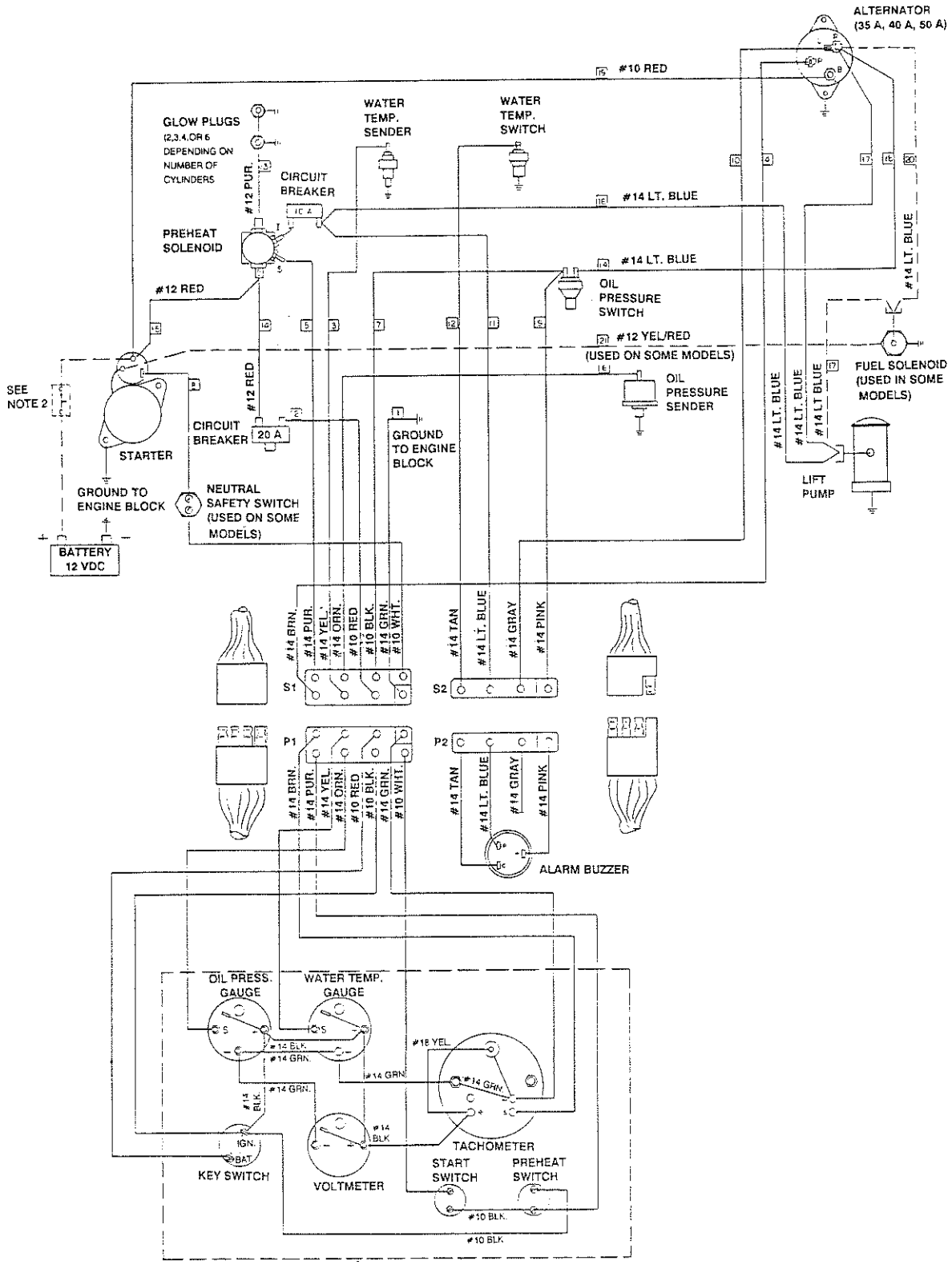

Admirals Panel DC Control Circuit Wiring Diagram #36844

page 2 of 2

SCHEMATIC DIAGRAM

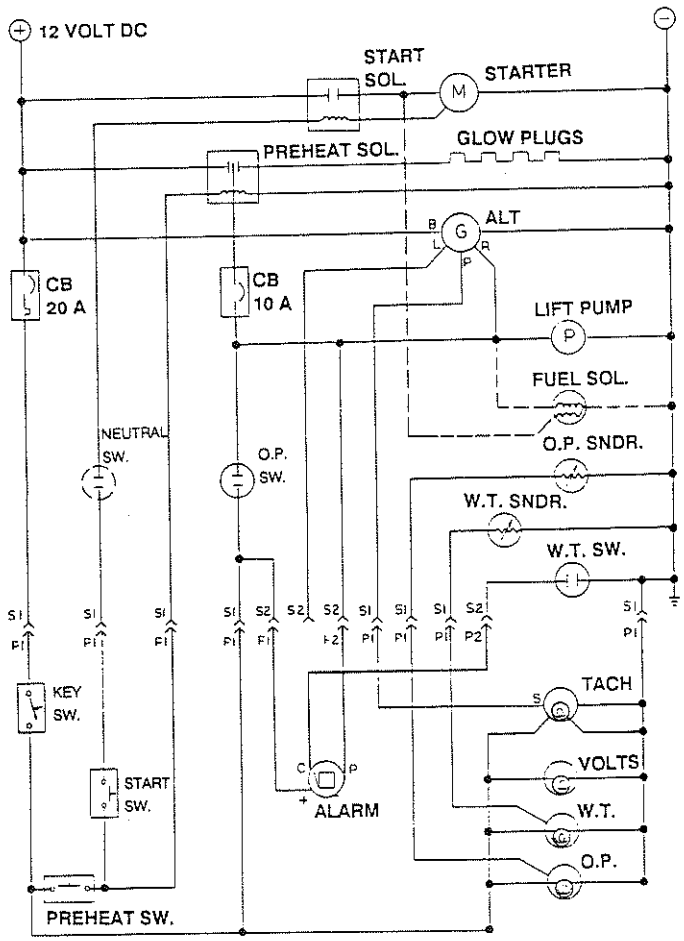

NOTE:

1. THIS PRODUCT IS PROTECTED BY A MANUAL RESET CIRCUIT BREAKER LOCATED NEAR THE STARTER. EXCESSIVE CURRENT DRAIN WILL CAUSE THE BREAKER TO TRIP AND THE ENGINE WILL SHUT DOWN. THE BUILDER/OWNER MUST BE SURE THAT THE INSTRUMENT PANEL, WIRING, AND ENGINE ARE INSTALLED TO PREVENT CONTACT BETWEEN ELECTRICAL DEVICES AND SALT WATER.

2. AN ON-OFF SWITCH SHOULD BE INSTALLED BETWEEN THE BATTERY AND STARTER TO DISCONNECT THE BATTERY IN AN EMERGENCY,AND WHEN LEAVING THE BOAT. A SWITCH WITH A CONTINUOUS RATING OF 175 AMPS AT 12 VOLTS DC WILL SERVE THIS FUNCTION. THIS SWITCH SHOULD NOT BE USED TO MAKE OR BREAK THE CIRCUIT.

3. THE GRAY WIRE AT PLUG #2 IS UNUSED AND SHOULD BE INSULATED.

COOLING SYSTEM

Description

Westerbeke marine diesel engines are designed and equipped for fresh water cooling. Heat produced in the engine by combustion and friction is transferred to fresh water which circulates throughout the engine. This circulating fresh water cools the engine block and its internal moving parts. The heat is transferred externally from the fresh water to sea water by means of a heat exchanger, similar in function to an automotive radiator. Sea water flows through the tubes of the heat exchanger while fresh water flows around the tubes; engine heat transferred to the fresh water is conducted through the tube walls to the sea water which is then pumped into the exhaust system where finally it is discharged overboard. In other words, the engine is cooled by fresh water, the fresh water is cooled by sea water, and the sea water carries the transferred heat over the side through the exhaust system. The fresh water and sea water circuits are independent of each other. Using only fresh water within the engine allows the cooling water passages to stay clean and free from harmful deposits. The two independent circuits and their components are discussed in the following paragraphs.

Fresh Water Circuit

NOTE: Refer to paragraphs **A** and **B** in this section for the recommended antifreeze and water mixture to be used as the fresh water coolant, and for information on filling the fresh water system.

Fresh water is pumped through the engine by a belt-driven circulating pump, absorbing heat from the engine. The fresh water coolant circulates through the engine's block absorbing heat, then passes through the thermostat into the exhaust manifold, to the heat exchanger where it is cooled, and then is returned to the engine block through the suction side of the fresh water circulating pump. When the engine is started cold, external fresh water flow is prevented by the closed thermostat (although some fresh water flow is bypassed around the thermostat to prevent exhaust manifold from overheating). As the engine warms up, the thermostat gradually opens, allowing full flow of the engine's fresh water coolant to flow unrestricted to the external portion of the cooling system.

A. Fresh Water Coolant (Antifreeze) Mixture.

A freshwater and antifreeze mixture should be used year-round in the cooling system. Water, when it freezes, expands sufficiently to split the heat exchanger and crack the engine block. A water/antifreeze mixture of proper concentration will prevent freezing (see page 53 for an antifreeze/water mixture chart).

Use soft water with few impurities, such as tap water (potable water) or rainwater. Never use hard or foul water. Use of hard water or water containing impurities will lead to the collection of scale in the engine and heat exchanger which will reduce the cooling system's efficiency.

Antifreeze of poor quality or without rust inhibitors will cause corrosion within the cooling system. Always use antifreeze which is compatible with aluminum cooling system components and is made by a reliable manufacturer. Never mix different brands of antifreeze.

Make sure that the cooling system of the engine is well cleaned before adding antifreeze. Recommended antifreeze for year round use is ZEREX or PRESTONE with rust inhibitors.

In order to control the concentration of the mixture, mix the antifreeze and freshwater thoroughly before adding it to the cooling system.

ANTIFREEZE CONCENTRATION DATA

Antifreeze Concentration	%	13	23	30	35	45	50	60
Freezing Temperature	° F	23	14	5	- 4	- 22	- 40	- 58
	(° C)	(- 5)	(-10)	(-15)	(- 20)	(- 30)	(- 40)	(- 50)

NOTE: An antifreeze concentration should be selected on the basis of a temperature which is about 10° F (5° C) lower than the actual atmospheric temperature expected.

B. Filling the Fresh Water System

A coolant recovery tank kit is supplied with each Westerbeke diesel engine. The purpose of this recovery tank is to allow for engine coolant expansion and contraction, during engine operation, without the loss of coolant and without introducing air into the cooling system.

This coolant recovery tank should be installed at, or above, engine manifold level, in a location where it can be easily monitored and where coolant can be easily added if needed (see the figure below). A stainless steel mounting bracket is supplied with each kit along with a 30-inch length of clear plastic hose and clamps to connect the hose between the engine's manifold fitting to the hose spud on the base of the recovery tank.

FUNCTION OF MANIFOLD PRESSURE CAP

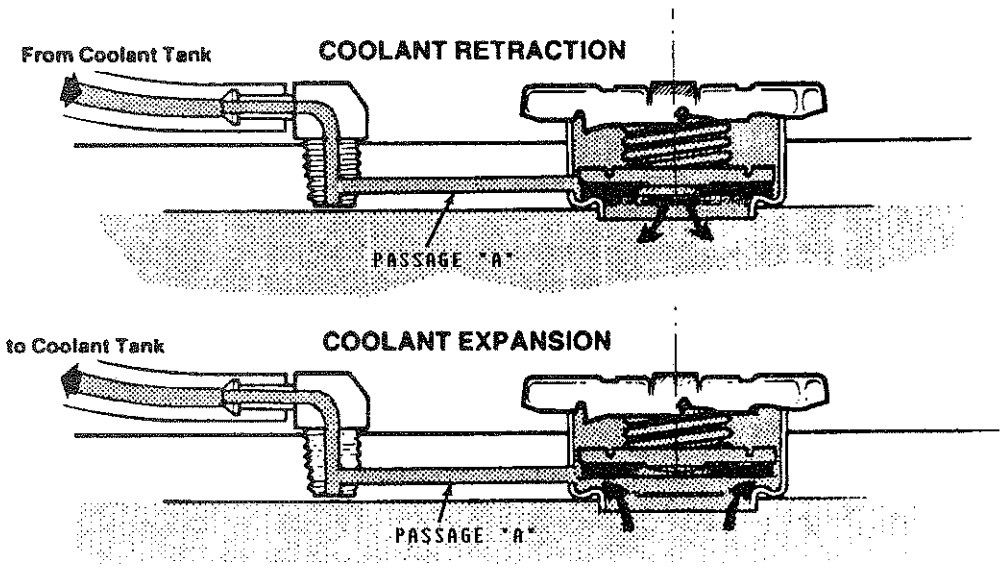

Coolant from the engine, when heated during engine operation, will expand, lifting the spring-loaded manifold pressure cap, and enter the recovery tank by way of the hose connecting the recovery tank to the manifold.

When the engine is shut down and cools, a small check valve in the pressure cap is opened by the contraction of the engine coolant, allowing some of the coolant in the recovery tank to be drawn back into the engine's cooling system, free of air and without loss. Periodically check that the passage (A) between the 90° fitting on the manifold and the filler neck in the manifold is clear so coolant can flow in either direction.

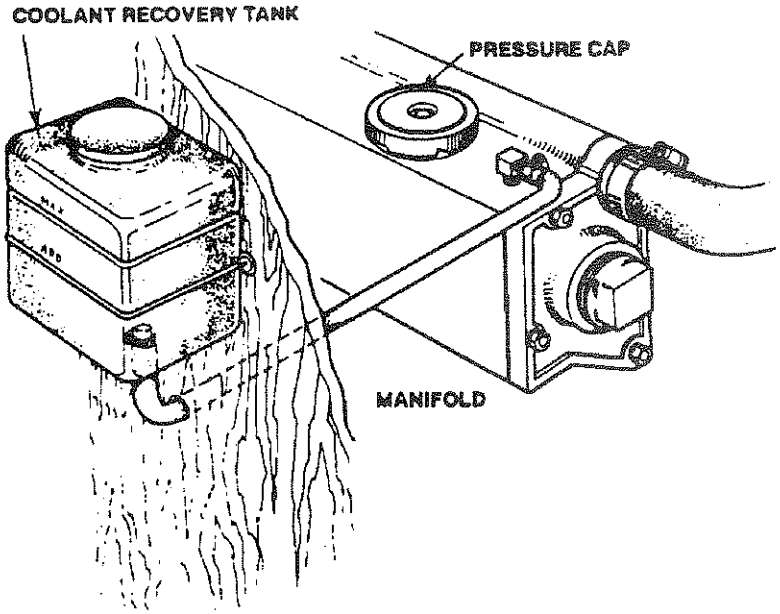

Coolant Recovery Tank, Recommended Installation

Fill the fresh water system as follows:

1. Remove the pressure cap from the manifold.

2. Pour a clean, antifreeze mixture into the manifold and allow enough time for the coolant to fill the fresh water cooling system.

3. Start the engine and allow it to come up to its operating temperature. Monitor the coolant in the manifold and add antifreeze coolant as air is expelled. Once all air is expelled from the system, fill the manifold to the filler neck and install the pressure cap.

4. Remove the plastic cap from the plastic coolant recovery tank and fill the tank with coolant halfway between the **ADD** mark and the **MAX** mark. Replace the plastic cap.

5. Run the engine and observe the coolant's expansion flow into the plastic recovery tank.

6. Check for leaks between the pressure cap/filler neck and then plastic recovery tank. Stop the engine and allow it to cool. Coolant should be drawn back into the cooling system as the engine's temperature comes down.

7. Add coolant to the recovery tank, as required, to top off the fresh water coolant system.

Thermostat

Generally, thermostats are of two types. One is simply a choking device which opens and closes as the engine's temperature rises and falls. The second type has a bypass mechanism. Usually this is a disc on the bottom of the thermostat which moves downward to close off an internal bypass passage within the head. Since 1980, each type of thermostat has a hole punched through it. The hole is a bypass to prevent the exhaust manifold from overheating during the engine's warm-up. Replacement thermostats must have this design characteristic.

Sea Water Circuit

The sea water flow is created by a belt-driven, positive displacement, neoprene impeller pump. The pump draws sea water directly from the ocean through the sea cock and sea water strainer and passes the water to the heat exchanger's sea water inlet. The sea water passes through the heat exchanger's tubes, from which heat from the fresh water system is absorbed, and then the sea water is discharged from the cooling system overboard through the water-injected wet exhaust system. Be sure to clean zinc debris from the area inside of the heat exchanger where the zinc anode is positioned.

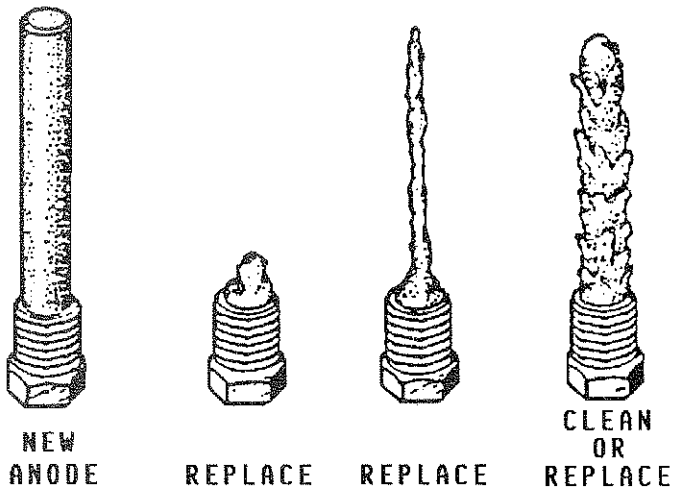

Zinc Anode Conditions

A zinc anode, or pencil, is located in the sea water cooling circuit within the heat exchanger. The purpose of the zinc anode is to sacrifice itself to electrolysis action taking place in the sea water cooling circuit, thereby reducing the effects of electrolysis on other components of the system. The condition of the zinc anode should be checked monthly and the anode cleaned or replaced as required. Spare anodes should be carried on board.

Sea Water Pump

The sea water pump is a self-priming, gear-driven rotary pump with a non-ferrous housing and a neoprene impeller. The impeller has flexible vanes which wipe against a curved cam plate within the impeller housing, producing the pumping action. On no account should this pump be run dry. There should always be a spare impeller and impeller cover gasket aboard (an impeller kit). Sea water failures occur when lubricant (sea water) is not present. Such failures are not warrantable and the operator's are cautioned to make sure sea water flow is present at start-up.

Alternator and Water Pump Drive Belt Tension

WARNING

Never attempt to adjust the drive belt's tension while the engine is in operation.

CAUTION

Excessive alternator and water pump drive belt tension can cause rapid wear of the belt and reduce the service life of the fresh water pump and alternator shaft bearings. Excessive slack or the presence of oil on the belt can cause belt slipping, resulting in high operating temperature, as well as insufficient alternator output.

The alternator and water pump drive belt(s) is/are properly adjusted if the belt can be deflected no less than 3/8 inch and no more than 1/2 inch (10 mm, 12 mm) as the belt is depressed with the thumb at the midpoint between the two pulleys on the longest span of the belt. (See the figure below.) A spare drive belt should be carried on board.

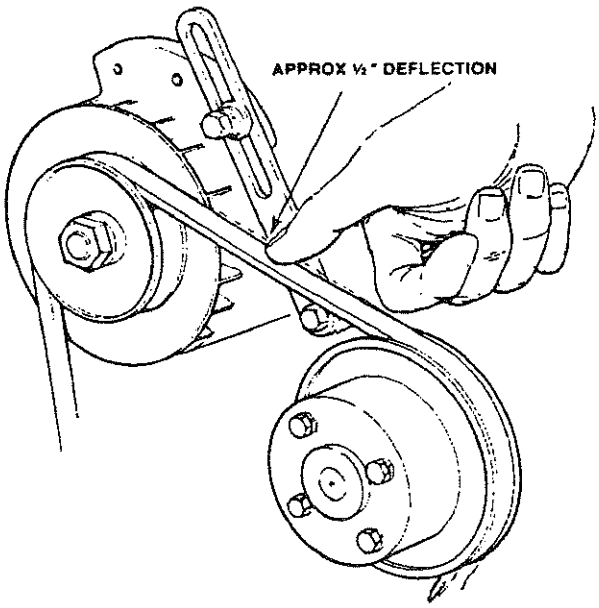

Alternator and Water Pump Belt Tension

Illustrated below is a typical Westerbeke engine's cooling system. Both fresh water and sea water flow through their independent cooling circuits. Refer to your engine's Parts List for part numbers and part descriptions if you need to order cooling system parts for your engine.

NOTE: When the remote expansion tank #24177 is used, the plastic coolant recovery tank should be removed and discarded and its connection point on the exhaust manifold plugged with a 1/8 NPT fitting.

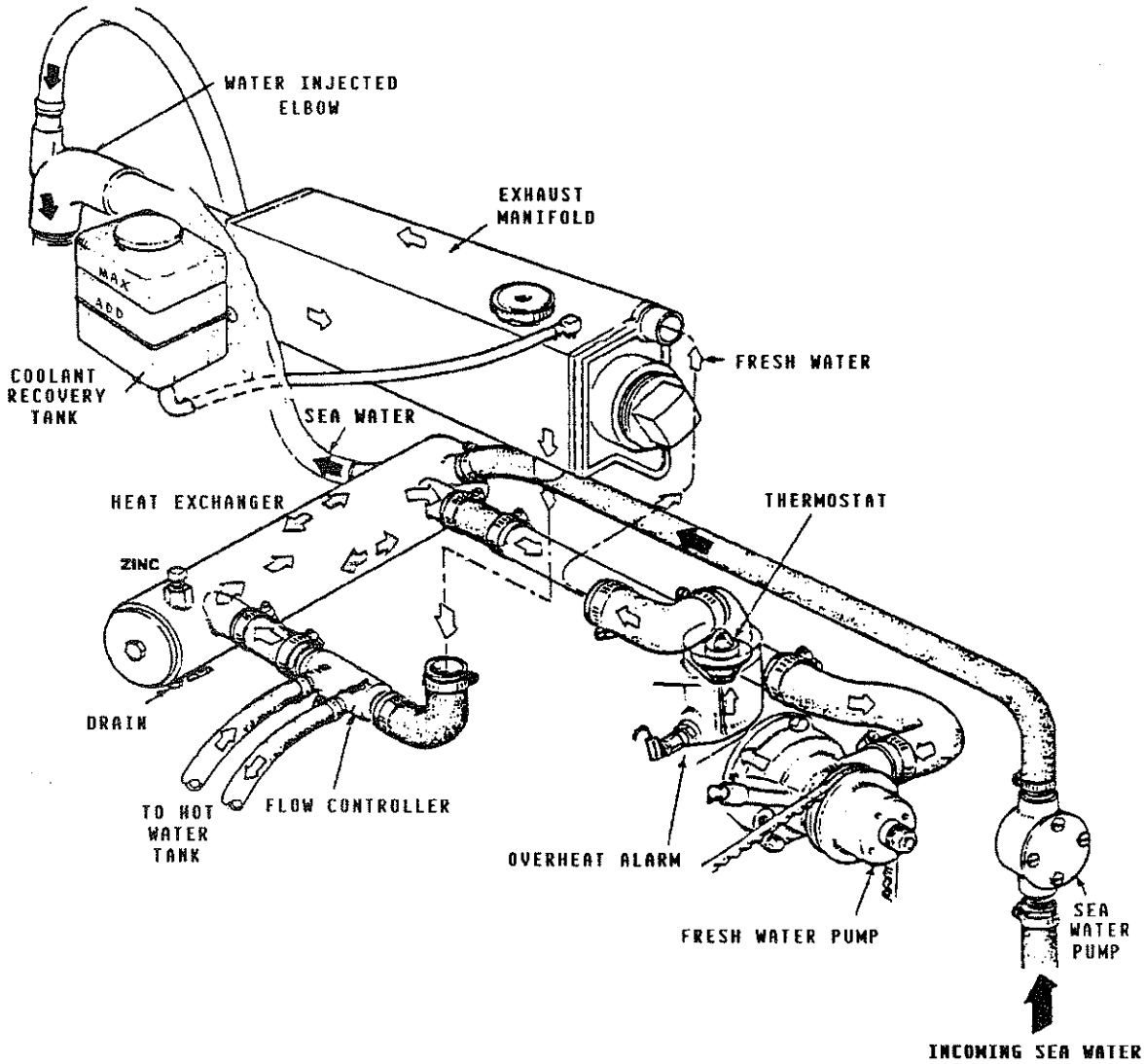

Typical Cooling System

Domestic Hot Water

All engine covered in this manual are equipped with a domestic hot water connection. If the owner/operator wishes to connect a hot water heater, remove the bypass hose and connect a heater as described in the instructions presented below.

General: With the bypass hose (Part # 30962) removed, there remain two connecting points **A** and **B** for hoses to run to and from the water heater. These connections assure a flow of hot water through the heater at all times but do not effect the flow of coolant through the engine.

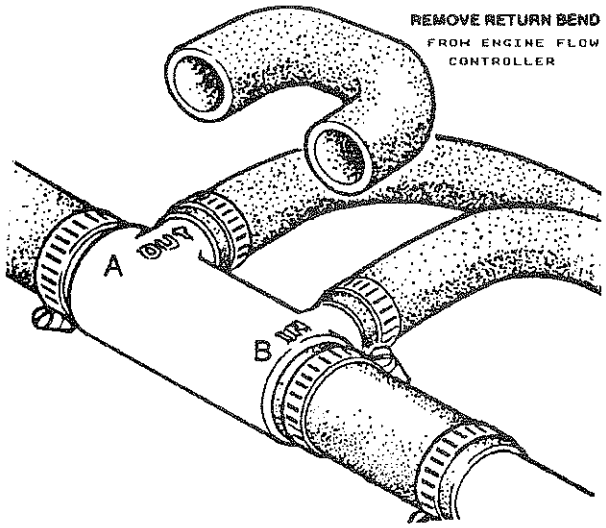

Flow Controller

Installation: The heater should be mounted conveniently either in a high or low position in relation to the engine so that the connecting hoses from the heater to the engine can run in a reasonably direct line without any loops which might trap air. Connection point **A** on the Flow Control housing should connect to the lower of the two connections on the water heater while the upper connection on the heater returns to connection **B**, nearest to the heat exchanger.

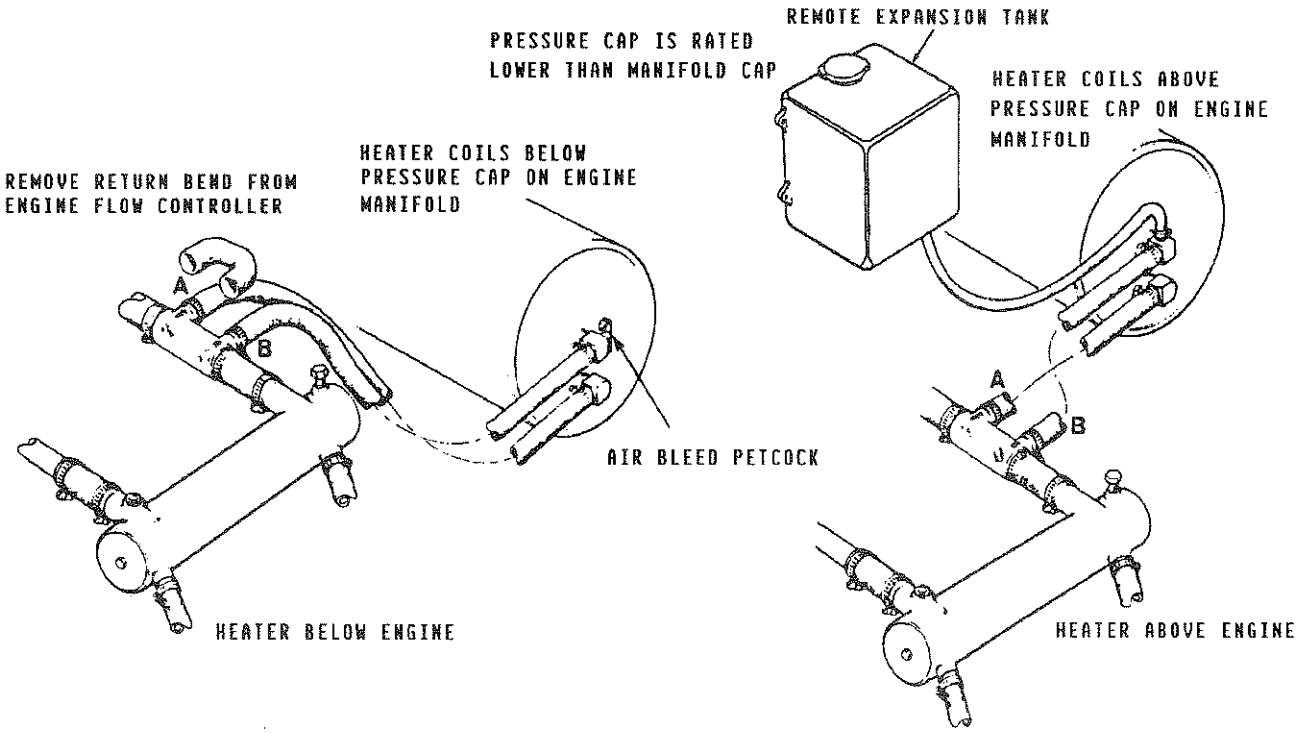

The illustrations shown above are Flow Control designs that have been adapted to operate with the single pass manifolds installed on the W 35B, the W 38B, and the W 42B engines.

Hoses should rise continuously from their low point at the heater to the engine so that trapped air will rise naturally from the heater to the engine. If trapped air is able rise to the heater, then an air bleed petcock must be installed at the higher fitting on the heater for bleeding air while filling the system. Avoid loops in hose runs which will trap air.

> Note: If any portion of the heating circuit rises above the engine's own pressure cap, then a pressurized (aluminum) remote expansion tank *must* be installed in the circuit to become the highest point. The remote expansion tank's part number is 24177. Install the remote expansion tank in a convenient location such as in a sail locker so the fresh water coolant level can easily be checked.

The cap on the engine mounted expansion tank should not be opened once the remote system is installed and filled.

The hose connection from the heater to the remote expansion tank should be routed and supported so as to rise continuously from the heater to the tank, enabling any air in the system to rise.

Refer to the illustrations on the previous page.

LUBRICATION SYSTEM

Engine Oil

For engine lubrication, use lubricating oil designated for diesel service. These oils are classified according to the API specifications into service grades CA, CB, CC and CD. The use of CC or higher (CD) grades, made by well-known manufacturers is recommended. The oil selected should be used thereafter.

Engine Oil Viscosity (SAE Number)

Use an oil having a viscosity best suited to the atmospheric temperature. Use of an all-season oil SAE 10W-30 with minimum viscosity change under different temperatures is suggested.

Atmospheric Temperature	Viscosity
68° F (20° C) or higher	SAE 30 or 10W-30
41° F (5° C) - 68° F (20° C)	SAE 20 or 10W-30
41° F(5° C) - or lower	SAE 10W-30

NOTE: Do not use an engine lubricating oil with an SAE number greater than 30 in the engine.

Oil Pressure

The engine's oil pressure, during operation, is indicated by the oil pressure gauge on the Admirals Panel (see page 37).

During normal operation, the oil pressure will range between 35 and 60 psi. At idle speed, the oil pressure will range between 20 and 35 psi. At the time of cranking, the oil pressure will rise proportionately with speed.

NOTE: A newly started, cold engine can have an oil pressure reading upwards of 60 psi. A warmed engine can have an oil pressure reading as low as 35 psi. These readings will vary depending upon the speed at which the engine is running.

Engine Oil Change (to include filter)

1. Draining the Oil Sump

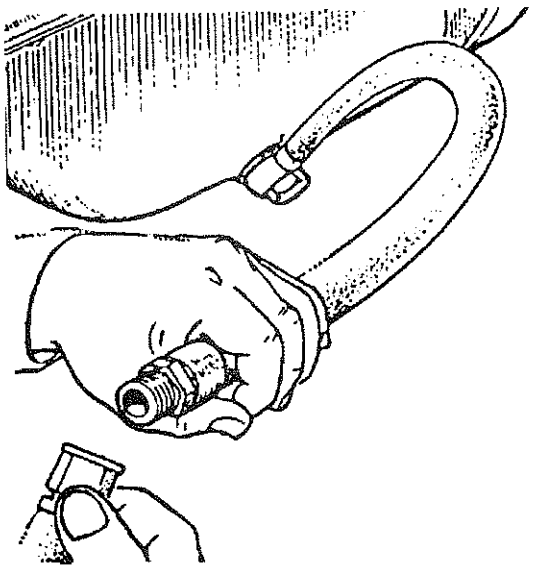

Remove the oil drain hose from its attachment bracket and lower it into a container and allow the oil to drain, or attach a pump to the end of the drain hose and pump the old oil out. Make sure the oil drain hose is properly secured in its holder after all of the old oil has been drained.

Always observe the old oil as it is removed. A yellow/gray emulsion indicates the presence of water in the oil. Although this condition is rare, it does require prompt attention to prevent serious damage. Call a competent mechanic should water be present in the oil. Sea water present in the oil can be the result of a fault in the exhaust system attached to the engine and/or a siphoning through the sea water cooling circuit into the exhaust, filling it up into the engine (refer to the installation illustrations on page 26).

2. Replacement of the Oil Filter

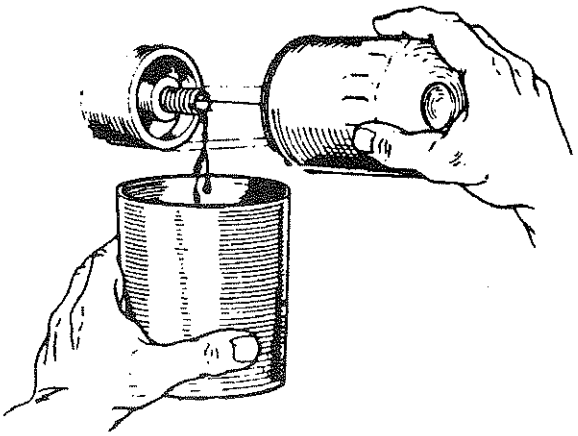

When removing the used oil filter, you may find it helpful and cleaner to punch a hole in the upper and lower portion of the old filter to drain the oil from it into a container before removing it. This helps to lessen spillage. A small style automotive filter wrench should be helpful in removing the old oil filter. Place some paper towels and a plastic bag around the filter when unscrewing it to catch any oil left in the filter. (Oil or any other fluid on the engine reduces the engine's cooling ability. Please keep your engine clean.) Inspect the old oil filter as it is removed to make sure that the rubber sealing gasket came off with the old oil filter. If this rubber sealing gasket remains sealed against the engine block, gently remove it. The replaceable cartridge-type oil filter requires no cleaning inside, so it may be properly disposed of.

When installing the new oil filter element, wipe the filter gasket's sealing surface on the engine block free of oil and apply a thin coat of clean engine oil to the rubber gasket on the oil filter. Screw the filter onto the threaded oil filter stub, and then tighten the filter firmly by hand.

NOTE: Generic filters are not recommended, as the material standards or diameters of important items on generic parts might be entirely different from genuine parts. Immediately after an oil filter change and oil fill, run the engine to make sure the oil pressure is normal and that there are no oil leaks around the new oil filter.

3. Filling the Oil Sump

Add fresh oil through the oil filler cap on the valve cover (refer to the photographs on pages 6 and 7 for the W 35B, pages 8 and 9 for the W 38B, and pages 10 and 11 for the W 42B for the location of the oil filler cap and lube oil dipstick). After refilling the oil, run the engine for a few moments while checking the engine's oil pressure. Make sure there is no leakage around the new oil filter or from the oil drain system, and then stop the engine. Then check the quantity of oil with the lube oil dipstick. Fill to, but not over, the high mark on the dipstick, should the engine require additional oil.

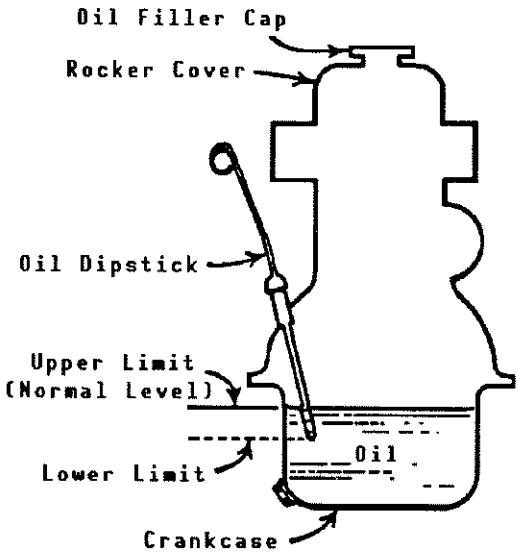

JS TRANSMISSION
(Standard)

General

The transmission's gear ratio is 2.47 to 1. The JS transmission is made of a lightweight, high-strength, corrosion-resistant aluminum alloy suitable for the marine environment. This manual transmission rotates opposite to the engine when in forward gear. The JS transmits its power with case-hardened helical gears and, in reverse, an intermediate gear. The reversing process is carried out by a servo double disc system. For safety reasons, the transmission is **NOT** filled with lubricating oil for shipment. Before leaving the factory, however, each transmission is thoroughly tested with oil in the transmission. This testing, among other things, provides all internal parts with a coating of oil. This oil acts as a preservative, providing reliable protection against corrosion for at least one year if the transmission is properly stored.

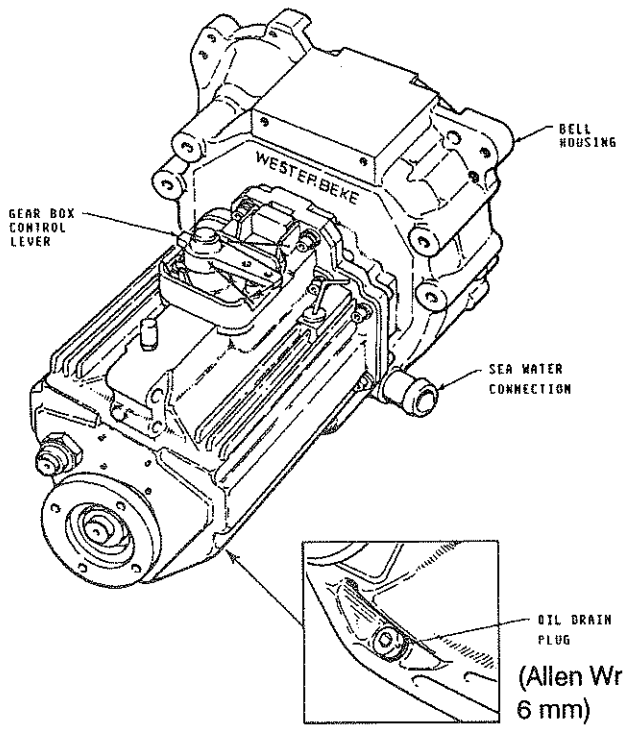

(Allen Wrench size is 6 mm)

Lubrication

The JS transmission is an immersion-lubricated type. Fill the transmission up to or near the top of the machined notch cut on the dipstick with SAE 20 W/20 or SAE 30 weight engine oil exclusively. Multigrade oils are not to be used in this transmission. **DO NOT** mix grades of oil! Lubricating oils may have an API specification of CC, CD, SC, SD, or SE.

The oil capacity for the JS transmission is approximately 1.0 quart (1.0 liter). Check the oil level daily after the engine has been warmed and stopped. The oil level should be maintained at the top of the machined flat on the dipstick when the dipstick is completely inserted into the transmission housing. Make sure the two O-ring gaskets on the dipstick are in good shape. These O-rings will help keep the dipstick in place. Change the transmission oil after the first 30 hours of engine operation and thereafter every 250 hours (or once per year, minimum). The JS has a 6 mm Allen wrench drain plug for draining the old oil. To make sure most of the old oil will drained from the transmission, run the engine in NEUTRAL for approximately 10 to 15 minutes so the oil may warm and flow better from the transmission. This oil may also be removed by inserting a small tube through the dipstick opening (where the oil is added) and attaching a pump onto the tube so the oil may be sucked out. The operating oil temperature must not exceed 250° F (120° C).

Alignment

Misalignment between the transmission's coupling and the propeller shaft's coupling can create serious problems. Make sure the alignment procedures outlined in the "Propeller Shaft Coupling," the " Propeller, " and the " Alignment of the Engine" sections of this manual are followed, pages 24 and 25.

Controls

The only controls required to operate the transmission is a single lever remote control cable. The cable should be attached to the gear box lever using the cable bracket supplied with the unit. Both the gear box lever and the remote control lever must be in the NEUTRAL position when the cable is attached to the gear box lever. This allows the remote cable an equal throw distance to shift the gear box into FORWARD or into REVERSE from the NEUTRAL position without running out of cable. Allow approximately 1 1/2 inches of cable throw from the NEUTRAL position on the transmission's gear box lever to the each of the two drive positions.

NOTE: If the throw distance (or travel) of the remote cable is too short, the gear box lever cannot fully engage the transmission into FORWARD or REVERSE. In this situation, the transmission's internal clutches will wear prematurely and the transmission may not properly engage, will over heat, and eventually fail.

NOTE: Excessive throw distance in the remote control lever is not detrimental to the transmission. Note that the position of the remote control lever should align with the NEUTRAL marking on its bracket when the transmission is really in NEUTRAL.

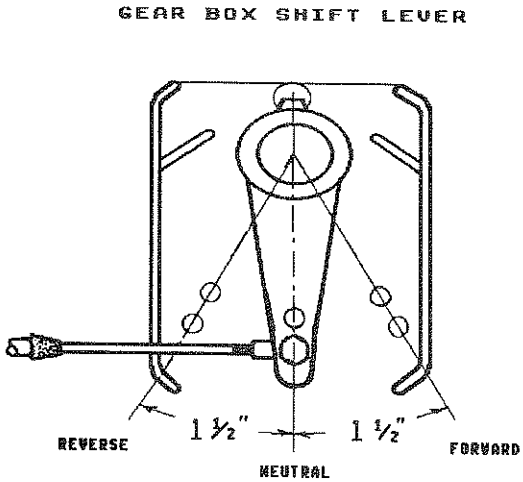

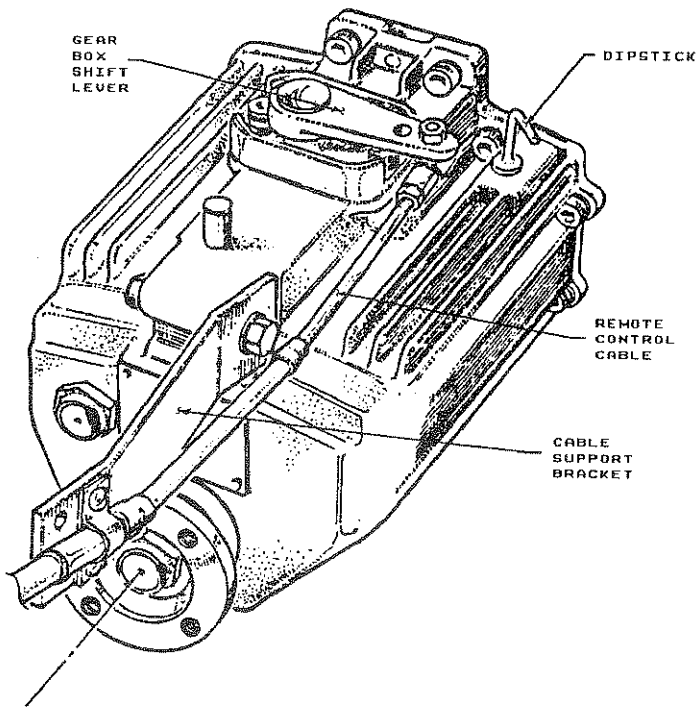

Shifting

To shift the transmission from NEUTRAL into FORWARD, exert a *heavy push* to the remote control lever. A gentle throw may not carry enough force to actually shift the transmission's internal gears. A gentle throw is signalled by the transmission not engaging into the desired drive. Make sure the remote control lever is lubricated at lease once each operating season. Shift the transmission while the engine is running at 1000 rpm or below.

CAUTION

NEVER remove or loosen the two-bolt gear box lever cover from transmission. The position of this plate and the actuating lever inside of the transmission has been finely adjusted at the factory to ensure equal throw distance of internal mechanisms. Loosening of this cover's capscrews voids the transmission's warranty.

Sailing Operation

The JS transmission should be left in NEUTRAL while sailing. Leaving the transmission in NEUTRAL while sailing alleviates unnecessary drag on the vessel because the propeller is able to freewheel (spin). However, to lock the propeller shaft and to prevent it from rotating, place the transmission into FORWARD gear.

Service

If any seal on the transmission shows signs of leaking, have the transmission looked at by a qualified Westerbeke Dealer. This problem, especially concerning the rear seal, is often attributed to an improper alignment of the transmission's coupling and the propeller shaft's coupling. Refer to the "Alignment of the Engine" section of this manual, page 24.

Never loosen the gear box lever cover screws, except in the course of qualified servicing; this upsets critical adjustments.

Disassembly of the transmission in the field is not recommended. If an overhaul or repair is needed, the work should be done by Westerbeke or an authorized Westerbeke service center.

Cooling

The JS transmission is sea water-cooled. Sea water enters the transmission through a stainless steel inlet pipe located at the base of the bell housing. This water helps to cool the transmission's lubricating oil.

OPTIONAL TRANSMISSIONS

HBW 100, 150, 150V Transmissions

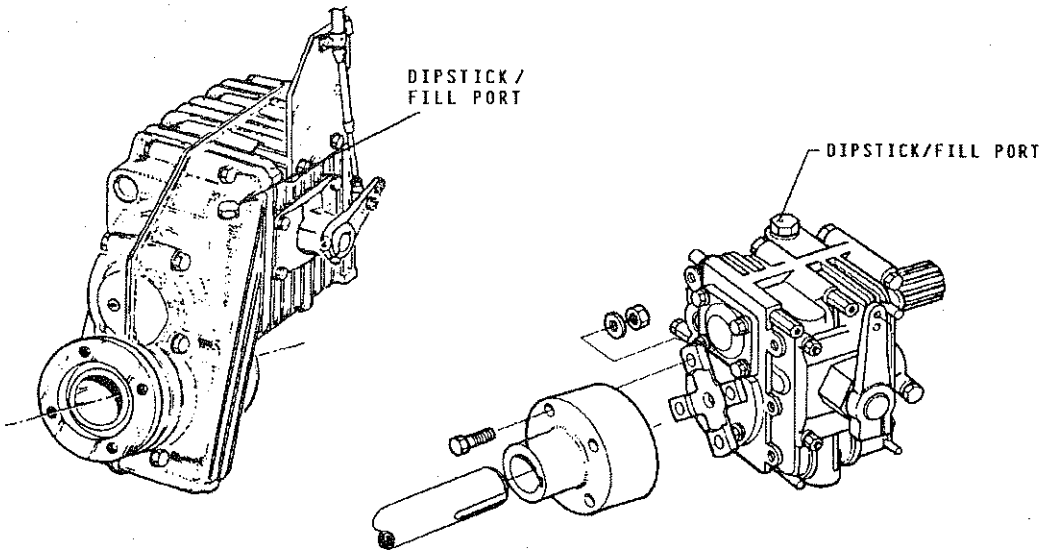

HBW 150V HBW 100 and 150

All HBW models turn right hand propellers.
All HBW models have their own oil sumps and dipsticks.
All HBW models use ATF lubricant.
All HBW models should be shifted into gear in one swift motion - not allowed to slip in slowly.

Control Of Gearbox

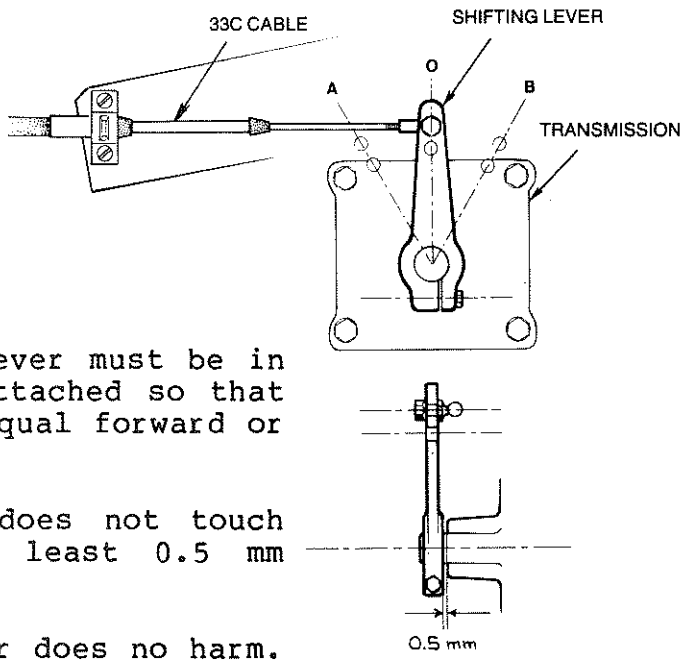

Control of Gearbox

1. The gearbox is suitable for single lever remote control using 33C cable.

2. The cable should attach at right angles to the actuating lever using the cable bracket supplied.

3. Both gear box lever and remote lever must be in neutral position when cable is attached so that travel of gearbox lever will be equal forward or reverse.

4. Check that actuating lever hub does not touch cover plate hub. Maintain at least 0.5 mm (0.002") clearance.

5. Over travel of the actuating lever does no harm. However, if the travel is too short to give full engagement, premature wear, excessive heat generation and gear failure may result.

6. The position of the cover plate underneath the actuating lever is factory adjusted to ensure equal lever travel from neutral to A and B. DO NOT LOOSEN THE CAPSCREWS HOLDING THIS ASSEMBLY. Doing this voids transmission warranty.

7. Fill gearbox with automatic transmission fluid to the level indicated by the dipstick mark. (See the illustration to the right.)

8. Note that to check oil level, the dipstick drops on the housing. It does <u>not</u> screw in.

9. The HBW gear box can be free-wheeled in Neutral. To stop propeller shaft rotation while under sail, place the gear into Reverse.

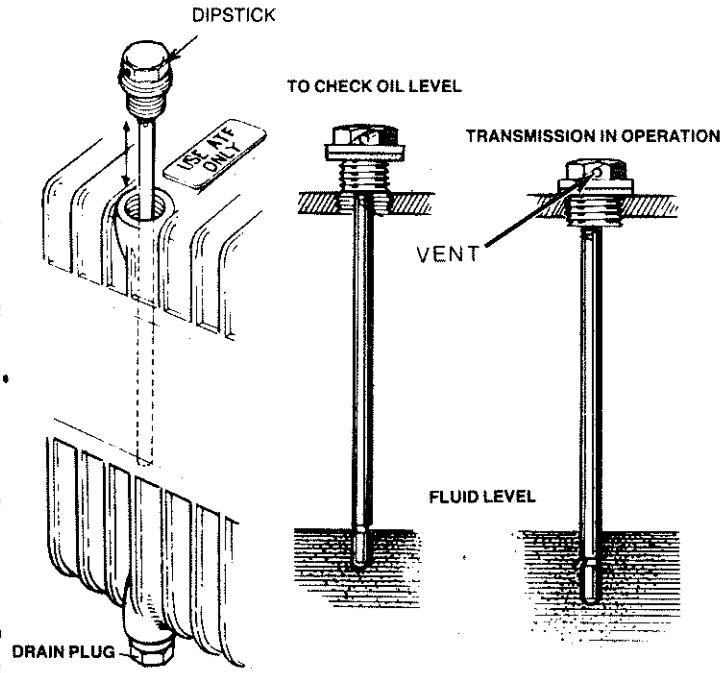

Dipstick Oil Levels

NOTE: The transmission is vented through a small hole in the dipstick. Keep this vent cleared.

Each engine model can be fitted with any of the transmissions listed below.

Transmission	Gear Ratios		
HBW 100	1.5:1	2:1	2.5:1
HBW 150	1.5:1	2:1	2.5:1
HBW 150V	1.5:1	2:1	2.5:1

These transmissions each have their own oil sumps and dipsticks. The HBW transmission uses Automatic Transmission Fluid (ATF) type A or Dextron II.

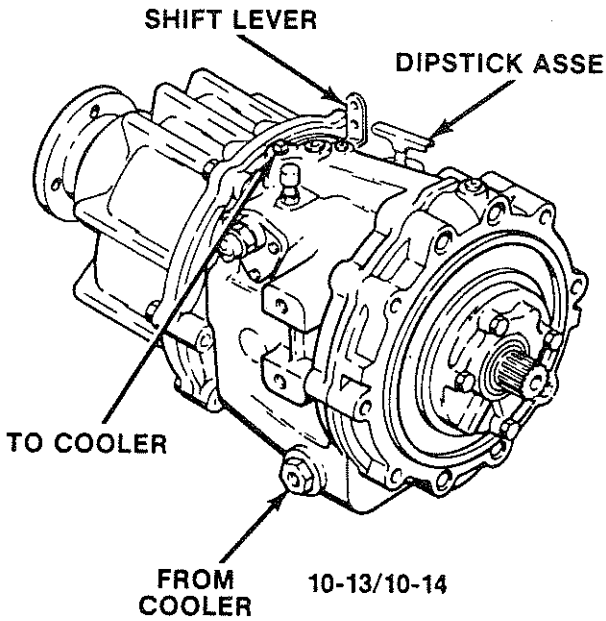

10-13/10-14

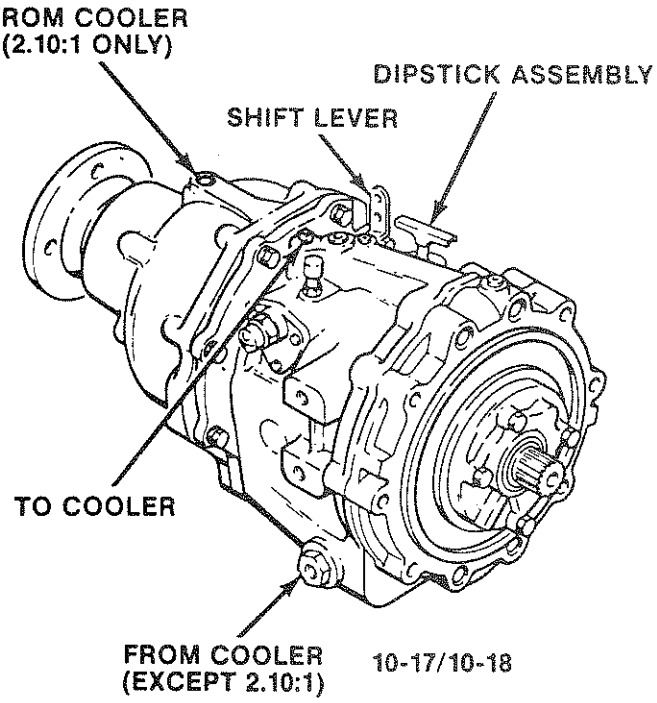

10-17/10-18

1. CONTROL LEVER POSITION

The position of the control lever on transmission when in forward should be shifted to the point where it covers the letter "F" on the case casting, and is located in its proper position by the poppet ball. The Warranty is cancelled if the shift lever poppet spring and/or ball is permanently removed, or if the the control lever is changed in any manner, or repositioned, or if linkage between remote control and transmission shift lever does not have sufficient travel in both directions. This does not apply to transmissions equipped with Warner Gear electrical shift control.

2. LUBRICATION

The properties of the oil used in the transmission are extremely important to the proper function of the hydraulic system. Therefore, it is extremely important that the recommended oil, automatic transmission fluid (ATF), Type A or Dexron II be used.

NOTE: Be sure the cooler is properly installed when required and the transmission contains oil before cranking or starting the engine.

Filling and Checking the Hydraulic System

The oil level should be maintained at the full mark on the dipstick. Check oil level prior to starting engine. Check daily before starting engine. The hydraulic circuit includes the transmission, oil cooler, cooler lines and any gauge lines connected to the circuit. The complete hydraulic circuit must be filled when filling the transmission and this requires purging the system of air before the oil level check can be made. The air will be purged from the system if the oil level is maintained above the pump suction opening while the engine is running at approximately 1500 RPM. The presence of air bubbles on the dipstick indicates that the system has not been purged of air.

New applications or a problem installation should be checked to make sure the oil does not drain back into the transmission from the cooler and cooler lines. Check the oil level for this drain back check only, immediately after the engine has been shut off and again after the engine has been stopped for more than one hour (overnight is excellent). A noticeable increase in the oil level after this waiting period indicates that the oil is draining from the cooler and cooler lines. The external plumbing should be changed to prevent any drain back.

Starting the Engine

Move the shift lever to the center position where the spring-loaded ball enters the chamfered hole in the side of the shift lever and properly locates lever in neutral position before starting engine.

Shifting

Shifts from any selector position to any other selector position may be made at any time and in any order if the engine speed is below 1000 RPM; however, it is recommended that all shifts be made at the lowest feasible engine speed. Move the shift lever to the extreme forward position where the spring loaded ball enters the chamfered hole in the side of the shift lever and properly locates lever in forward position.

Move transmission shift lever to the extreme rearward position where the spring-loaded ball enters the chamfered hole in the side of the shift lever and properly locates it in the reverse position.

Freewheeling

Under sail with the propeller turning, or at trolling speeds with one of two engines shut down, the design of the gear maintains adequate cooling and lubrication. Attempting to place the gear into forward or reverse while under sail to stop propeller shaft rotation will have no effect. To stop propeller shaft rotation while under sail, a mechanical shaft brake would be needed.

Cooling Problems

Water passages inside of the cooler will sometimes become clogged, and this will reduce cooling capacity and cause overpressuring. Back flushing of the cooler will sometimes help to flush the foreign material from the cooler passages. The cooler and hose should be thoroughly flushed or replaced in the event a failure has occurred. Metallic particles from the failure tend to collect in the case of the cooler and gradually flow back into the lube system. Replace oil cooler to prevent contamination of the new transmission.

Water hoses may collapse and reduce or completely shut off all flow to the cooler. Collapsed hoses are usually caused by aging of the hoses or improper hose installation. Hose installation should be made with no sharp bends. Hoses should be routed so there is no possibility for engine shifting to cause hoses to pull loose or become pinched. A visual inspection of hoses while under way will sometimes allow detection of faulty hoses.

Reduction or complete loss of water flow can be caused by a faulty water pump. A rubber water pump impeller will sometimes fail and after such a failure the cooler passages may be restricted by the particles of rubber from the failed impeller. Water pump cavitation may be caused by improper or faulty plumbing or an air leak on the inlet side of the pump. The water pump may not prime itself or may lose its prime when inlet plumbing is not properly installed.

It is possible for cross leaks to occur inside the cooler, permitting oil to flow into the water or water flow into the oil. Checking transmission fluid levels at each day's use will help spot such a happening, undetectable loss of fluid and/or emulsified fluid.

Annual Checks

1. PROPELLER AND OUTPUT SHAFT ALIGNMENT: This check should also be made any time the propeller strikes a heavy object and after any accident where the boat is stopped suddenly. Shaft alignment should also be checked after the boat has been lifted by a hoist or moved on a trailer.

2. SHIFT LEVER POSITIONING: The selector controls must position the shift lever exactly in F, N and R selection positions with the ball poppet centered in the shift lever hole for each position.

3. BOLT TORQUE: Check all bolts for tightness.

4. COOLER CONNECTIONS: Check water lines, oil lines and connections for leakage. Make sure lines are securely fastened to prevent shifting.

5. CHANGING OIL: A seasonal oil change is recommended in pleasure boats. Work boats require more frequent changes. Change oil any time the oil becomes contaminated, changes color or becomes rancid smelling. Automatic transmission fluids (ATF), Type A is recommended for use.

Daily Checks

1. Check transmission oil level.

2. Check for any signs of oil leakage in the bellhousing, at gasket sealing surfaces or at the output shaft oil seal.

3. A quick visual check of the general condition of the equipment may cause faulty equipment to be detected.

4. Listen for any unusual noises and investigate to determine the cause of any such noises.

   Note: Low engine idle speed can produce drive damper chatter.

Winter Checks

Drain water from transmission oil cooler. This will prevent freezing in cooler climates, and prevent harmful deposits from collecting.

General Checks

1. Check coupling alignment each time a transmission is replaced in the boat.

2. Check shift linkage adjustment to ensure that the transmission shift lever is positioned so that the spring loaded ball enters the chamfered hole in the side of the shift lever.

3. Connect an oil cooler into the cooler circuit before cranking or starting the engine. Various cooler circuits have been used and the correct cooler connections should be found from service literature prior to makeing the cooler installation.

4. Use a cooler or sufficient size to ensure proper cooling.

5. Check engine rotation and transmission pump setting and the propeller rotation prior to assembling the transmission to engine.

6. Check oil pressue and temperature when transmission function indicates that a problem exist.

7. Use the recommended fluid for filling the transmission.

8. Fill the transmission prior to starting the engine.

9. Check oil level immediately after the engine has been shut off.

10. Use a clean container for handling transmission fluid.

11. Replace cooler and lines after a transmission failure, prior to installing a new or rebuilt transmission.

12. Check fluid level at operating temperature.

Flange Alignment - Direct Coupled Models

Install the propeller shaft flange on to the propeller shaft and tighten the two clamping bolts on the split hub (none on RV-10D). A self-locking set screw is provided for the propeller shaft flange. Spot drill the propeller shaft and then securely tighten the set screw. Many good installations are ruined by improper shaft flange alignment. Accurate alignment will ensure a smooth operating drive train and eliminate many problems that arise due to misalignment. Final alignment should not be attempted until the boat has been allowed to "settle" in the water. After the engine has been installed, adjust the mounts per manufacturer's instructions until the pilot diameters of the gear shaft flange and the propeller shaft flange engage freely. Butt the flange faces together. Without rotating either flange, check with a feeler gauge in at least four places as shown in the illustration. If the maximum feeler gauge that can slip between the flange faces at any point is .003", the unit is properly aligned. If a thicker gauge can be inserted at any point, the engine must be readjusted until proper alignment is obtained. Turn the propeller shaft flange 1/4 of a turn without moving the gear shaft change. Try inserting the .003" feeler gauge as described above. The gap will not change if the propeller shaft is straight. If it increases, the shaft or flange is bent and must be removed and straightened. Rotate the propeller shaft flange in two more 1/4 turn increments and repeat the procedure. The pilot diameters must be rechecked to ensure that they still engage freely. Secure the two flanges together with the heat treated bolts and special high collared lockwashers supplied.

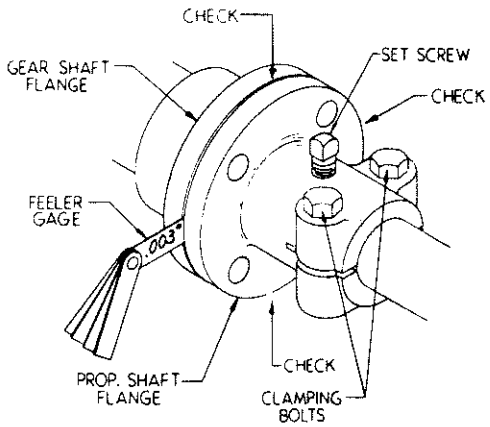

FLANGE ALIGNMENT

Engine Alignment - Independent Models

The engine must be adjusted so that the alignment of the flexible joint is within 3°. An accurate steel rule should be used for this purpose as shown in the illustration. On short installations using a flexible joint assembly, the faces of the flexible joint must be parallel within 1/8". Measure this in at least four places around the diameter without rotating the assembly. With long installations using the #36 tubular drive shaft (also on all RV-10D's) the distance from the #33A spool adapter to the bores in the universal joint which is welded to the tubular shaft must be measured on both sides of the joint. Rotate the shaft exactly 1/4 of a turn and measure to the same joint. The four distances must be equal within 1/8". (Do not measure

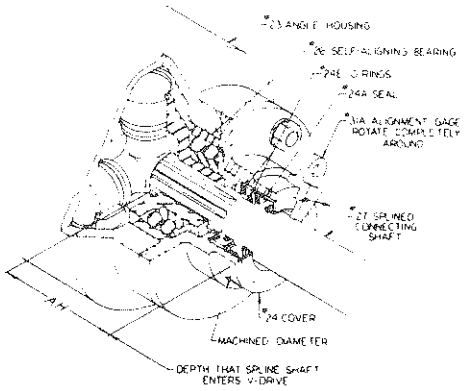

to the joint end that is on the spool adapter. This distance will not vary with misalignment since the joint is bolted and cannot move.) Put the #31A alignment gauge on the machined diameter of the #24 cover and slide it completely around. It will indicate how the engine must be moved to center the spline shaft in the oil seal. Re-measure the joints to see if they are still parallel within 1/8". It is important that both alignments be checked thoroughly. It is possible for the spline shaft to be perfectly centered and the flexible joint to be out more than 3°. Premature failure of the #26 self-aligning bearing and seals may occur due to misalignment. The zerk fitting (located on the cross of the universal joint) should be greased with a light alemite lubricant. The above procedure should be repeated after the boat has been placed in operation. It is possible for the engine to slightly shift and settle, especially if it has rubber mounts.

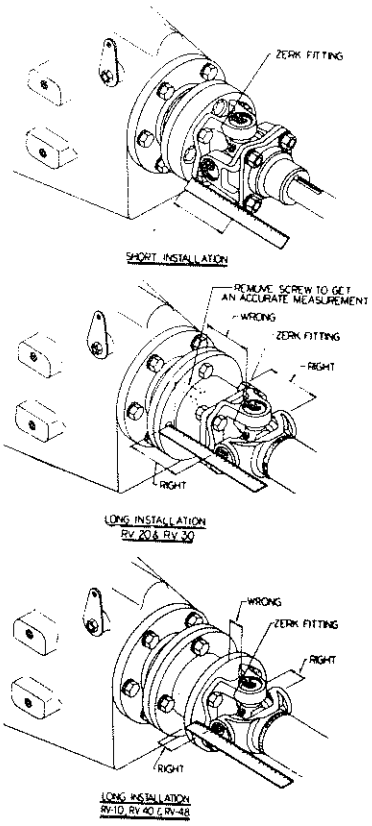

Flange Alignment - Independent Models

Install the propeller shaft flange on to the propeller shaft and tighten the two clamping bolts on the split hub (none on RV-10). A self-locking set screw is provided for the propeller shaft flange. Spot drill the propeller shaft and securely tighten the set screws.

All V-drives are supplied with 3-way adjustable mounting brackets (2-way on the RV-10 and RV-20) as standard equipment. The brackets must face downward as shown in the illustration to properly absorb propeller thrust. The mounting plates can be removed and reversed to fit wider engine bed centers. Before installing the V-drive, loosen all the nuts on the mounting brackets and check to see that the studs are in the center of the slots. Re-tighten the nuts. Place the V-drive on the engine bed, lining it up "by eye" to the propeller shaft flange as closely as possible. Firmly bolt it down through the holes provided in the mounting plates. Loosen the locking nuts on the adjusting screws. Slightly loosen the nuts on the mounting brackets just enough to be able to move the V-drive.

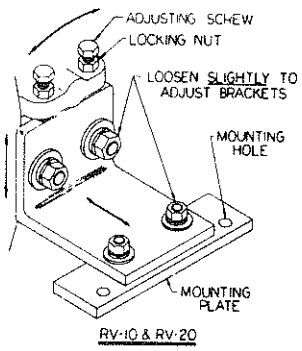

Many good installations are ruined by improper propeller shaft flange alignment. Accurate alignment will ensure a smooth operating drive train and eliminate many problems that arise due to misalign-

ment. Final alignment should not be attempted until the boat has been allowed to "settle" in the water. Adjust the V-drive until the pilot diameters of the gear shaft flange and the propeller shaft flange engage freely. Butt the flange faces together. Without rotating either flange, check with a feeler gauge in at least four places as shown in the illustration. If the maximum feeler gauge that can slip between the flange faces at any point is .003", the unit is properly aligned. If a thicker gauge can be inserted at any point, the V-drive must be readjusted until proper alignment is obtained. Turn the propeller shaft flange 1/4 of a turn without moving the gear shaft flange. Try inserting the .003" feeler gauge as described above. The gap will not change if the propeller shaft is straight. If it increases, the shaft or flange is bent and must be removed and straightened. Rotate the propeller shaft flange in two more 1/4 turn increments and repeat the procedure. The pilot diameters must be rechecked to ensure that they still engage freely. Tighten the nuts on the mounting brackets and the locking nuts on the adjusting screws. Remove the set screws from the brackets (none on RV-10 or RV-20), spot drill and securely tighten. Recheck the flange alignment to make sure the V-drive did not move out of alignment. Secure the two flanges together with the heat treated bolts and special high collared lockwashers supplied.

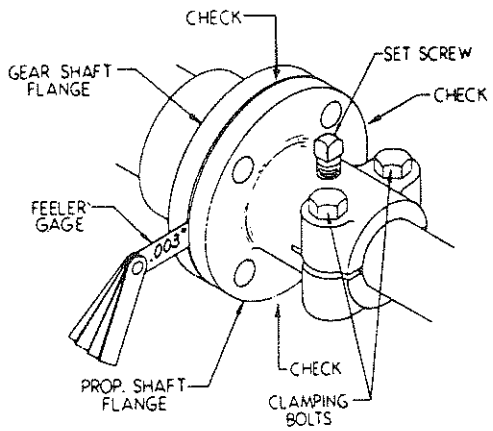

FLANGE ALIGNMENT

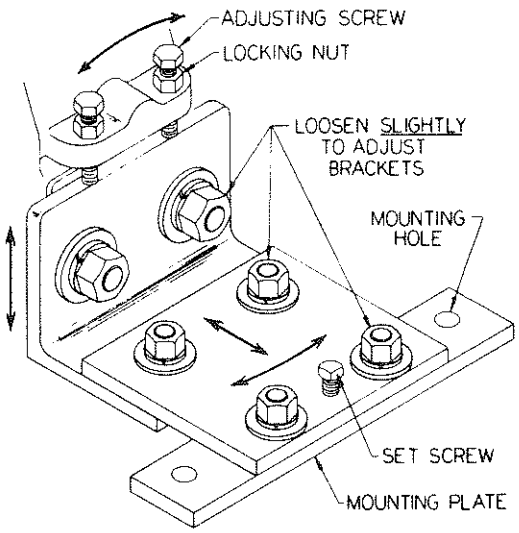

RV-30, RV-40 & RV-48

Water and Switch Connections

Hook up the water lines to the two pipe connections on the V-drive (intake and exhaust lines are interchangeable). Generally, one line from the seacock to the V-drive and another from the V-drive to the intake of the engine water circulating pump are utilized. In some cases, scuppers through the hull are connected to and from the V-drive to provide independent water-cooling and are actuated by the movement of the water. With closed cooling systems, the V-drive should be incorporated into the system between the cooler and the suction side of the water pump. Proper operating temperatures are from 140° to 180°F, although safe operating temperatures may be as high as 210°F. On the models equipped with an oil circulating pump, the #49 oil

pressure drop switch and the 12 volt #49A warning light should be hooked up per the wiring diagram. The switch may be grounded to any part of the V-drive or engine (either terminal may be used for the ground).

Oil Fill

Pull out the #21 oil level gauge. Unscrew the #12 breather cap and fill the V-drive with SAE #30 motor oil through the #12A breather elbow. On the RV-10 only, the oil may be added by removing the plug in the #6D top cover. See table below for approximate oil capacities. The amount varies with the angle of installation. The oil level should be checked with the oil level gauge fully inserted in the unit. The proper level is between the "H" and "L" marks on the gauge. Add a 2 ounce tube of Molykote (molybdenum disulfide), which is supplied with each V-drive for extra lubrication and break-in. It provides protection against scoring or galling of gears, bearings and other moving parts. Additional Molykote after break-in is not required. Reinstall the breather cap. The oil level should be rechecked after the unit has been run and allowed to sit for about a minute. Add oil if necessary.

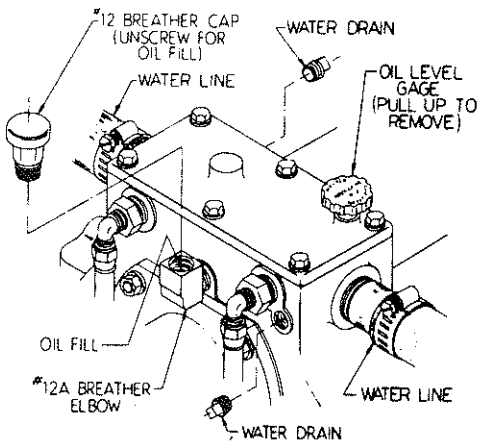

	RV-10	RV-20	RV-30	RV-40	RV-48
Oil capacity (Approx.)	1 pint	2 pints	3 pints	4 pints	4 pints

Dealer Preparation

The propeller shaft and engine alignment must be checked and corrected, if necessary, before the boat is delivered. Final alignment should not be attempted until the boat is allowed to "settle" in the water. The oil level must be checked and oil added if required. While the boat is being run, the water connections should be checked for leaks. The oil pressure drop switch and warning light (if the V drive is equipped with an oil circulating pump) should be checked for proper operation. Do not transport the boat with the propeller shaft coupling connected. Damage to the shaft, shaft log and V-drive can result.

Operation

A pressure drop warning light is mounted on the instrument panel on V-drives equipped with an oil circulating pump. The warning light will stay on until the boat gets under way and the engine speed increases to sufficient RPM for the pump to maintain pressure. This normally occurs at approximately 1200 RPM, but the actual speed may vary by as much as 400 RPM. Extended cruising at low RPM, such as when trolling, is not harmful to the V-drive, even though the warning light may stay lit. Normal operation is between 6 to 12 PSI. The light will go on when the oil pressure drops below 2 PSI. Loss of oil and/or insufficient oil level are the major causes of pressure drop. The oil level should immediately be restored, and while running the boat, the unit should be checked for leaks. If the oil level is normal and the light stays lit when the boat reaches normal cruising speed, the wiring should be checked for loose and/or corroded connections. If the wiring is correct and the light remains lit, the #49 pressure drop switch, which is mounted on the side of the V-drive (see illustration), should be checked for proper operation. The switch can easily be removed and an accurate oil pressure gauge installed in its place. If the pressure is normal, the switch should be replaced. If the pressure is below normal, the oil lines should be checked for blockage. The pump should be inspected and replaced if necessary. The pump is standard on the RV-48 and an optional feature on other models (not available on the RV-10).

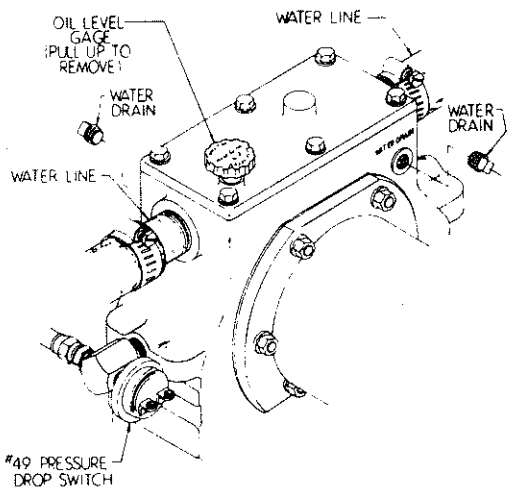

The oil level should be checked several times during the season, especially on V-drives whitout pumps (see OIL FILL).

A clatter or rattle in the V-drive at low RPM is due to the overriding of the propeller during the compression stroke of the engine. Although annoying, it is not harmful. It may be reduced by adjusting the idle speed and/or tuning up the engine for smoother operation.

Maintenance

1. OIL CHANGE AND JOINT LUBE

After the first 100 hours of operation and every season and/or 500 hours thereafter, the oil should be changed. Run the boat to warm up the V-drive to operating temperature. Turn off the engine. Remove the plug in the #6B bottom cover that is opposite the #43S oil strainer. Reinstall after draining. Disconnect the oil hose leading from the #43S strainer (leave the elbow on the strainer). Unscrew the strainer and clean the outside surface. Reinstall the strainer and reconnect the oil hose. Unscrew the two #22 magnetic plugs that are located on diagonally opposite corners of the #1C main housing.

The plugs can be checked to see if they are magnetic only after removal. Touch the inside face with a metallic object, such as a screwdriver. Clean them and reinstall. Usually, there are four plugs in the bottom part of the main housing. Only two of these are magnetic. The other two need not be removed (see illustration). Refill with SAE 30 motor oil to the proper level (see INSTALLATION - OIL FILL). The Zerk fitting on the external universal joint should be greased with a light alemite lubricant (see ENGINE ALIGNMENT).

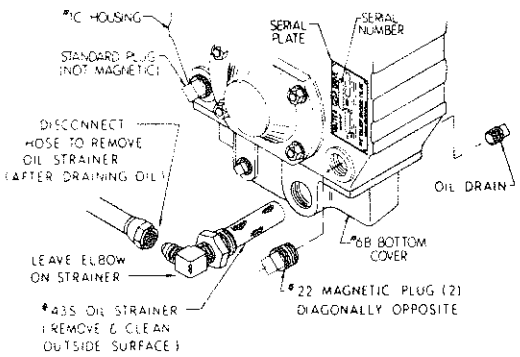

2. WATER DRAIN

For protection from freezing during winter lay-up, remove the small pipe plugs (located diagonally opposite) on the front and back of the housing marked "Water Drain" (see illutration). On the RV-10 only, one of the water lines going into the #6 water-cooled bottom cover must be disconnected to drain the water.

3. FLANGE AND ENGINE REALIGNMENT

When the boat is launched after being in drydock, the line-up of the V-drive to the propeller shaft flange and the engine to the V-drive should be rechecked and corrected if necessary. Some engines with rubber mounts may sag and must be raised with adjustments or shims for proper alignment (see "Flange Alignment" and "Engine Alignment").

ENGINE TROUBLESHOOTING

Introduction

The tables which follow indicate troubleshooting procedures based upon certain problem indicators, the probable causes of the problems, and the recommendations to overcome these problems.

Note that the engine's control system (electrical system) is protected by a 20-Ampere manual reset circuit breaker located on the rear lifting bracket.

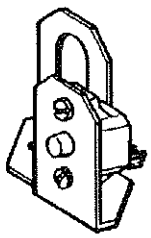

Problem	Probable Cause	Verification/Remedy
Key switch ON but no panel or test function.	1. Battery OFF.	1. Turn Battery ON.
	2. 20 Amp circuit breaker is tripped.	2. Reset the breaker by pushing in the button.
	3. Loose battery cable connection.	3. Check the + connection to the starter and the - connection to the ground stud on the bell housing.
PREHEAT switch is depressed: no preheat solenoid activation: no electric fuel pump or alternator excitation.	1. Faulty solenoid, connections or switch.	1. Connection for 12 volts at **S** terminal of the solenoid is. faulty.
		1. Check the preheat switch.
	2. Faulty connection or tripped 10 Amp breaker on the I terminal on the preheat solenoid.	2. Check for 12 volts at the 10 Amp breaker. Check for 12 volts at fuel lift pump and at the **R** terminal on the alternator when the preheat button is pushed.

Problem	Probable Cause	Verification/Remedy
START switch is depressed: no starter engagement.	1. Connection to starter solenoid faulty.	1. Check connection **S** at the starter solenoid for 12 volts with the switch depressed.
	2. Faulty START switch.	2. Check switch with an ohmmeter.
	3. Faulty solenoid.	3. Twelve volts is present at the **S** terminal of the starter solenoid.
	4. Loose battery connection.	4. Check battery connections at both the + and - ground.
	5. Low batteries.	5. Check battery charge state. Low voltage at the solenoid's **S** terminal with no activation.
Engine cranks, but does not start.	1. Shut-off valve at fuel tank.	1. Return shut-off valve to its ON position. Now bleed the fuel system.
	2. Faulty fueling system.	2. Check for fuel to engine.
	3. Air is in the fuel system.	3. Bleed the fuel system. Locate the leak and correct it.
	4. Fuel pump is not operating.	4. Check pump operation. Check for 12-Volts at pump.
	5. Fuel filters are clogged.	5. Clean/replace filters.
Failure to stop.	1. Mechanical Run linkage is disconnected.	1. Stop engine by manually moving the RUN linkage to STOP. That failing, shut OFF fuel and air.

Problem	Probable Cause	Verification/Remedy
Engine Stops.	1. Fuel starvation. Fuel shut-off is turned OFF.	1. Check to see that the shut-off valve at the fuel tank is ON.
	2. Fuel pump is inoperative.	2. Inspect the fuel pump for 12 volt and to see if it is pumping.
	3. Water is in the fuel.	3. Pump water out of the bottom of the fuel tank(s), change the fuel filters, and bleed the fuel system.
	4. Exhaust system is restricted.	4. Check exhaust system for some type of blockage such as carbon buildup at the exhaust elbow. Check for a fault in the muffler. Check for a collapsed exhaust hose.
Battery runs down.	1. Alternator output is low.	1. Check drive belt tension. Perform an output check with a voltmeter at the B+ terminal on the alternator.
	2. Faulty alternator. the alternator when not operating.	2. Voltage leak through
	3. Bad battery connections.	3. Connections are corroded or loose at the battery or/and at the engine.

MAINTENANCE AND ADJUSTMENTS

Introduction

This section contains a scheduled preventive maintenance program and several adjustment procedures the owner/operator can perform without the benefit of sophisticated and expensive tools and instruments.

Preventive Maintenance

Perform the preventive maintenance in accordance with the schedules listed in the following paragraphs. Adherence to these schedules will ensure the equipment is maintained in the best possible condition and that it will perform to expectations. Those items marked by an asterisk (*) are recommended to be performed by an authorized dealer or distributor.

Daily (before each use)

1. Check the oil sump level. Maintain the oil level at or near upper level mark on dipstick.

2. Check the coolant level in the plastic recovery tank. Maintain this level at or above the level marked **ADD**.

3. Check the transmission's lubricant level, and add additional lubricant as needed.

4. Visually inspect the unit; check for loose belts, chafed or broken wires, loose brackets and fittings, damaged hoses, loose clamps, and other equipment not properly secured. This check should include the propeller shaft coupling to the transmission's output flange.

5. Check the fuel supply. Fill tank(s) with a good grade of No. 2 diesel fuel, if required.

6. Check the primary filter/water separator. Drain and service as required. (A primary filter/water separator is optional, but strongly recommended.)

7. Check the engine's gauges or lights for proper oil pressure, operating temperature, and starting battery charging voltage once the engine is operating.

8. Check the alternator's output gauge (if installed) for proper DC voltage.

9. Check to make sure the propeller shaft is securely connected to the transmission coupling.

Monthly

Check the condition of the zinc anode in the heat exchanger's sea water circuit. Clean or replace the anode, as required. Keep the area inside the heat exchanger clean of zinc anode debris.

Servicing After Initial 50 Hours of Operation

1. Change the engine's lubrication oil and oil filter.

2. Replace the fuel filter element in the electric fuel lift pump and in the engine-mounted secondary fuel filter. Change the fuel filter element and clean the optional filter/water sedimentor, if a separator has been installed, and if the model type permits cleaning.

*3. Torque the cylinder head bolts.

*4. Adjust valve clearances.

5. Adjust the alternator and water pump drive belt tension, if required.

6. Lubricate the throttle, the RUN linkage cable, and the transmission's remote control cable.

7. Change the transmission's oil.

8. Adjusts the engine's idle speed as needed.

9. Check to make sure the propeller shaft is securely connected to the transmission coupling.

Servicing After Every 100 Hours of Operation

1. Change the engine's lubrication oil and oil filter.

2. Adjust the alternator and water pump drive belt tension, if required.

3. Check the transmission fluid or oil level.

Servicing After Every 250 Hours of Operation

1. Replace the fuel filter elements in the electric fuel lift pump and in the engine-mounted secondary fuel filter.

2. Change the transmission's oil.

Servicing After Every 500 Hours of Operation

*1. Torque the cylinder head bolts.

*2. Adjust the valve clearances.

3. Drain, flush, and refill the fresh water cooling system. The illustration on pages 6 to 11 show the heat exchanger and the zinc anode location. The drain plug for the fresh water system is next to the zinc anode.

*4. Check the condition of the starter motor drive pinion; lubricate the pinion.

5. Check the resistance of the glow plugs. (.4 to .6 ohms)

6. Check the sea water pump for internal wear. Examine the pump's cover, cam, and internal housing. Replace worn parts as needed. Check for leaks and repair as needed.

NOTE: Items highlighted by an asterisk (*) should be performed by a competent mechanic.

Servicing After Every 800 Hours of Operation

*1. Remove and check fuel injectors.

Injector spray pressure:

1991 psi + 140 psi
(140 kg/cm^2 + 10 kg/cm^2)

Eliminate undesirable injection conditions including after dripping.

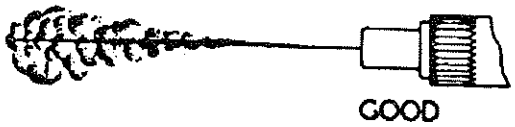

*2. Check the engine's compression pressure. Remove each glow plug and check each cylinder's compression pressure. The engine's cranking speed is at 280 rpm.

Standard	Minimum
455 psi (32 kg/cm^2)	369.7 psi (26 kg/cm^2)

(Maximum difference between cylinders: 35.5 psi (2.5 kg/cm^2)

*3. Check the battery-charging alternator for proper operation.

*4. Check the tightness of bolts, nuts, and clamps.

Servicing After Every 1000 Hours of Operation

1. Remove, clean, and pressure test the primary heat exchanger. (A local automotive radiator shop should be able to clean and test the heat exchanger.)

NOTE: Operating in silty and/or tropical waters may require that a heat exchanger cleaning be performed more often than every 1000 hours.

*2. Check the injection pump's timing.

Torquing Cylinder Head Bolts (W 35B THREE Engine)

Tighten the cylinder head bolts according to the sequence shown in the illustration shown to the right. Make sure the engine is cold when this is done. Before applying the specified torque to the bolt, loosen it 1/4 to 1/2 of a turn and then apply the torque. Follow this procedure according to the numbered sequence shown in the illustration to the right.

Bolts # 4,5,6,7,8,9,10 and 11 are tightened between 79.5 to 86.8 lb-ft (11 to 12 kg-m).

Bolts # 1,2 and 3 are tightened between 50.6 to 57.8 lb-ft (7 to 8 kg-m).

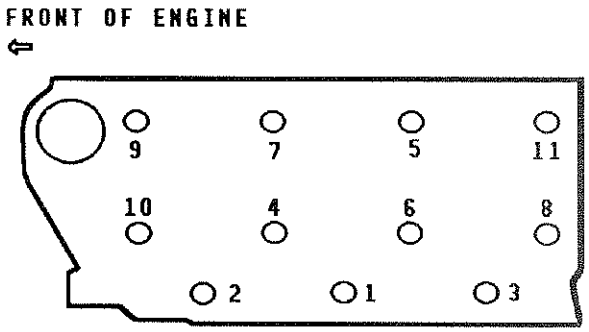

Torquing Cylinder Head Bolts (W 38B FOUR and W 42B FOUR Engine)

Tighten the cylinder head bolts according to the sequence shown in the illustration shown to the right. Make sure the engine is cold when this is done. Before applying the specified torque to the bolt, loosen it 1/4 to 1/2 of a turn and then apply the torque. Follow this procedure according to the numbered sequence shown in the illustration to the right.

Bolts # 4,5,6,7,8,9,10 and 11 are tightened between 79.5 to 86.8 lb-ft (11 to 12 kg-m).

Bolts # 1,2 and 3 are tightened between 50.6 to 57.8 lb-ft (7 to 8 kg-m).

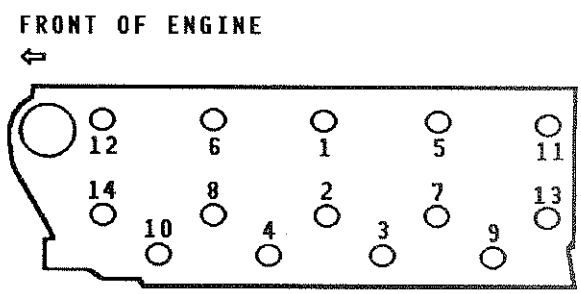

Valve Clearance Adjustment (W 35B THREE Engine)

CAUTION

Adjust the valve clearance when the engine is cold. Valves are adjusted by cylinder in the firing order of the engine.

Tighten the cylinder head bolts to the specified torque before adjusting the valves. (See page 85.)

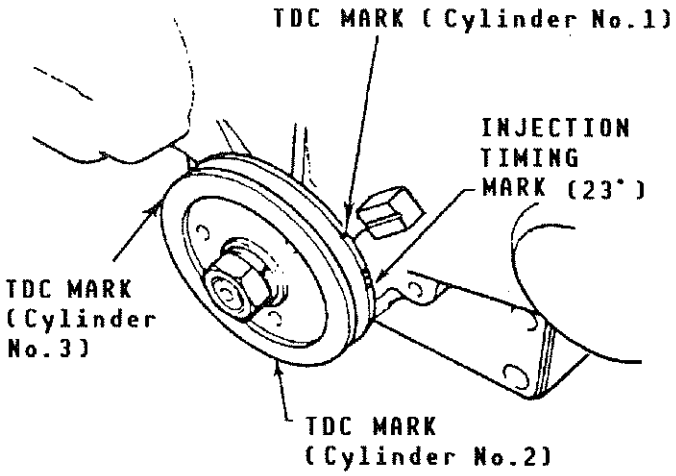

1. Pull off the air breather pipe from the rocker cover, and take off the rocker cover bolts and the rocker cover.

2. Adjust the valve clearances at TDC (Top Dead Center) for each cylinder when they are on their compression stroke (see below). Remember the engine's firing order is 1-3-2. You may find that turning the engine's crankshaft is more easily accomplished when the engine's glow plugs are removed before the crankshaft is rotated.

   A. Align the timing mark on the gear case with the timing mark on the crankshaft pulley indicated for cylinder No. 1 (the one next to the three injection timing marks). In this position, the No. 1 cylinder is at its top Timing Mark while dead center on its compression stroke. Check both intake and exhaust valve clearances for this cylinder. If the valves have no specified clearance, adjust by means of the adjusting screws. Remember to align the timing marks properly; if not, the valve may be pushed up by the piston, depending on the position of the cam lobe. Be sure to check the valves for this cylinder - they both should be closed.

   B. Next the No. 3 cylinder: Turn the crankshaft clockwise 240° so the TDC mark for the No. 3 cylinder, on the front crankshaft pulley, is approximately at the position shown in the illustration above. Now adjust the intake and exhaust valves for cylinder No. 3. Be sure to check the valves for this cylinder - they both should be closed.

   C. Last is the No. 2 cylinder: Turn the crankshaft clockwise another 240° to position the TDC mark on the crankshaft pulley approximately at the position shown in the illustration shown above. Now adjust the intake and exhaust valves for cylinder No. 2. Be sure to check the valves for this cylinder - they both should be closed.

ADJUST VALVES TO 0.010 INCHES (0.25 MM)

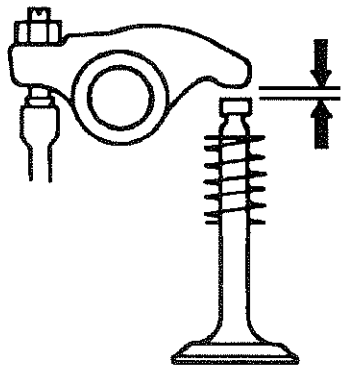

Adjust each valve's clearance by inserting a 0.010 inch (0.25 mm) feeler gauge between the rocker arm and the valve stem.

Valve Clearance Adjustment (W 38B FOUR and W 42B FOUR Engines)

CAUTION

Adjust the valve clearance when the engine is cold.

Tighten the cylinder head bolts to the specified torque before adjusting the valves. (See page 85.)

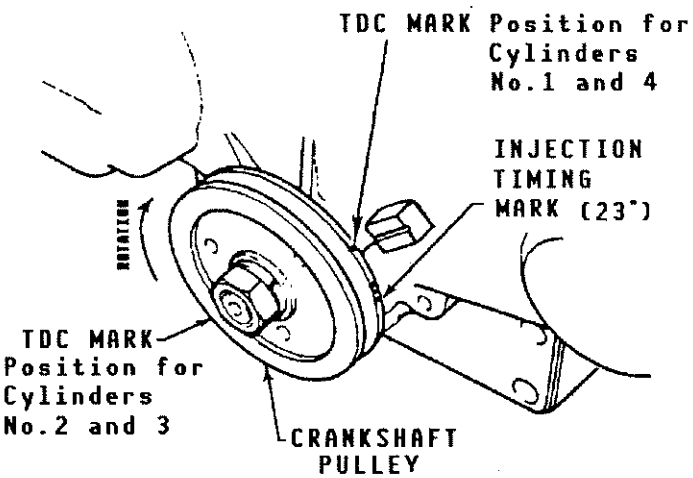

1. Pull off the air breather pipe from the rocker cover, and take off the rocker cover bolts and the rocker cover.

2. Adjust the valve clearances at TDC (Top Dead Center) for each cylinder when they are on their compression stroke. Remember the engine's firing order is 1-3-4-2. The engine's valves must be adjusted in this order while the valves are closed. You may find that turning the engine's crankshaft is more easily accomplished when the engine's glow plugs are removed before the crankshaft is rotated.

   A. Rotate the engine in the normal direction of rotation placing the No. 1 cylinder at the top of its compression stroke. The TDC mark on the crankshaft pulley should be in line with the pointer on the front of the gear case cover, and the valves for the No. 1 cylinder should be closed. Now adjust the intake and exhaust valves for cylinder No. 1.

   B. After adjusting the valves for cylinder No. 1, rotate the front crankshaft pulley clockwise 180° so the TDC mark on the pulley is positioned approximately in the position shown in the illustration shown above for cylinder No. 3. Now adjust the intake and exhaust valves for cylinder No. 3.

   C. Rotate the crankshaft pulley clockwise another 180° and adjust the valve clearances for the intake and exhaust valves for cylinder No. 4.

   D. Rotate the crankshaft pulley clockwise another 180° and adjust the valve clearances for the intake and exhaust valves for cylinder No. 2.

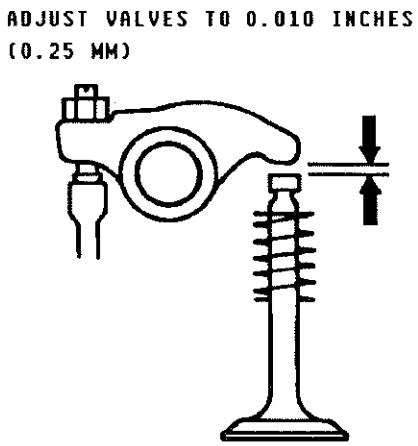

Adjust each valve's clearance by inserting a 0.010 inch (0.25 mm) feeler gauge between the rocker arm and the valve stem.

Injection Pump Timing Adjustment (Spill Timing)

If your engine's fuel injection timing is not properly adjusted, the engine will not operate properly and will be difficult to start. Have the injection pump delivery rate checked by a well-established fuel injection shop. Adjust the injection timing as follows:

> NOTE: The fuel shut-off lever must be in the **RUN** position while making the adjustment or no fuel will flow from the fuel injection pump.

Refer to the illustration below when servicing the fuel injection pump. First remove the high-pressure fuel line from between the No. 1 injector and the No. 1 fuel delivery valve holder. Remove the No. 1 fuel delivery valve holder and remove the delivery valve spring beneath the holder. Reinstall only the delivery valve holder and re-attach the high pressure fuel line to the delivery holder. Attach it so that the end that would connect to the fuel injector is pointing away from the engine. Fuel will flow from this line during the timing check.

Rotate the engine's crankshaft in its normal direction of rotation to position piston No. 1 at the beginning of its compression stroke

Move the throttle lever to its full open position and operate the electric lift pump. Slowly rotate the crankshaft clockwise (as viewed from the front), catching the fuel from the No. 1 fuel line, until the instant the fuel completely stops flowing (no drips). At this instant, the 23° BTDC timing mark on the crankshaft pulley should be directly aligned with the timing indicator on the front of the gear case (refer to the illustrations on pages 86 and 87).

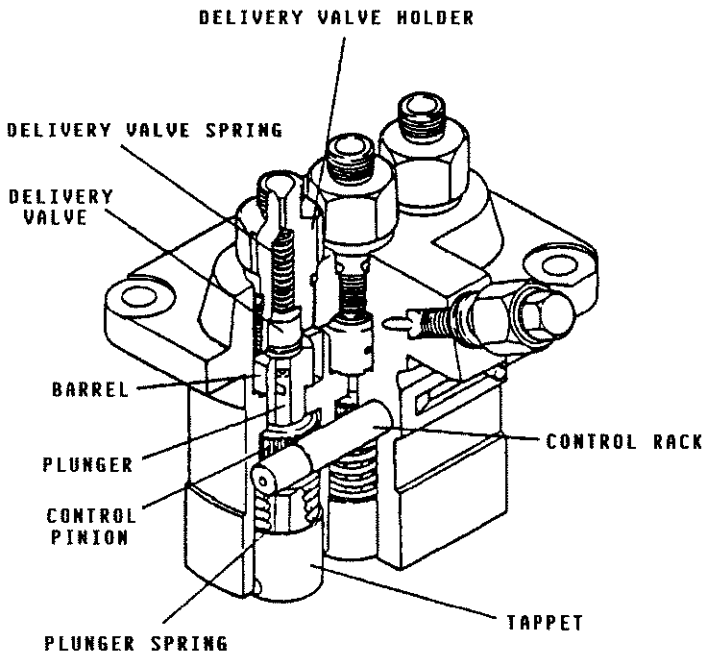

If the specified injection timing (23° BTDC) cannot be attained, adjust the timing by increasing or decreasing the thickness of shim material under the injection pump's mounting flange to change the injection timing point. Changing the shim thickness by 0.004 inch (0.01mm) changes the injection timing by approximately one degree. To advance the timing, decrease the shim thickness, as required. To retard the timing, increase the shim thickness, as required. Refer to your engine's Parts List for shim part numbers.

LAY-UP AND RECOMMISSIONING

General

Many owners rely on their boatyards to prepare their craft, including engines and generators, for lay-up during the off-season or for long periods of inactivity. Others prefer to accomplish lay-up preparation themselves.

The procedures which follow will allow you to perform your own lay-up and recommissioning, or to use as a check list if others do the procedures.

These procedures should afford your engine protection during a lay-up and also help familiarize you with the maintenance needs of your engine.

If you have any questions regarding lay-up procedures, call your local servicing dealer; he will be more than willing to provide assistance.

Propeller Shaft Coupling

The transmission and propeller half couplings should always be opened up and the bolts removed whenever the boat is hauled out of the water or moved from land to water, and during storage in a cradle. The flexibility of the boat often puts a severe strain on the propeller shaft or coupling, or both, while the boat is taken out or put in the water. In some cases, the shaft has actually been bent by these strains. This does not apply to small boats that are hauled out of the water when not in use, unless they have been dry for a considerable period of time.

Fresh Water Cooling System

A 50-50 solution of antifreeze and fresh water is recommended for use in the fresh water cooling system at all times. This solution may require a higher concentration of antifreeze, depending on the area's winter climate. Check the solution to make sure the antifreeze protection is adequate.

Should more antifreeze be needed, drain an appropriate amount from the engine block and add a more concentrated mixture. Operate the engine to ensure a complete circulation and mixture of the antifreeze concentration throughout the cooling system. Now recheck the antifreeze solution's strength.

Engine Lubrication System

With the engine warm, drain all the lubricating oil from the oil sump. Remove and replace the oil filter. (Place some paper towels and a plastic bag around the filter to catch the oil during its removal.)

When installing the new oil filter, be sure to apply a small amount of oil on the rubber sealing gasket at the base of the filter. Fill the sump with the correct amount of oil for your engine. (Refer to the"SYSTEM SPECIFICATIONS" section of this manual, page 13 for the W 35B, page 16 for the W 38B, and page 19 for the W 42B.) Use an oil with an API specification of CC or CD. Run the engine and check for proper oil pressure and make sure there are no leaks.

CAUTION

Do not leave the engine's old lubricating oil in the sump over the lay-up period. Lubricating oil and combustion deposits combine to produce harmful chemicals which can reduce the life of your engine's internal parts.

Transmission Lubrication System

Fill the transmission completely full of the same oil that was use during its operating season. DO NOT mix grades of oil. Filling the transmission immerses the transmission's internal components in oil which protects them against corrosion during the lay-up period.

Fuel System

Top off your fuel tanks with No. 2 diesel fuel. Fuel additives should be added at this time to control algae and condition the fuel. Care should be taken that the additives used are compatible with the primary filter/water separator used in the system. Change the element in your primary fuel filter/water separator, if the fuel system contains one, and clean the separator sediment bowl.

Change the fuel filter elements on the engine and bleed the fuel system, as needed. Start the engine and allow it to run for 5 - 10 minutes to make sure no air is left in the fuel system. Check for any leaks that may have been created in the fuel system during this servicing, correcting them as needed.

Sea Water Circuit

Close the through-hull sea cock. Remove the sea water intake hose from the sea cock. Place the end of this hose into a 5-gallon bucket of clean fresh water. Before starting the engine, check the zinc anode found in the primary heat exchanger on the engine and clean or replace it as required, and also clean any zinc debris from inside the heat exchanger where the zinc anode is located. Clean the sea strainer, if one is installed in the inside of the hull.

Start the engine and allow the sea water pump to draw fresh water through the system. When the bucket is empty, stop the engine and refill the bucket with an antifreeze solution slightly stronger than needed for winter freeze protection in your area.

Start the engine and allow all of this mixture to be drawn through the sea water system. Once the bucket is empty, stop the engine. This antifreeze mixture should protect the sea water circuit from freezing during the winter lay-up, as well as providing corrosion protection.

Remove the impeller from your sea water pump (some antifreeze mixture will accompany it, so catch it in a bucket). Examine the impeller. Acquire a replacement, if needed, and a cover gasket. Do not replace the impeller (into the pump) until recommissioning, but replace the cover and gasket.

Intake Manifold and Through-Hull Exhaust

Place a clean cloth, lightly soaked in lubricating oil, in the opening of the intake manifold to block the opening. Do not shove the cloth out of sight. (If it is not visible at recommissioning, and an attempt is made to start the engine, you may need the assistance of a servicing dealer.) Make a note to remove the cloth prior to start-up. The through-hull exhaust part can be blocked in the same manner.

Starter Motor

Lubrication and cleaning of the starter drive pinion is advisable, if access to the starter permits its easy removal. Make sure the battery connections are shut off before attempting to remove the starter. Take care in properly replacing any electrical connections removed from the starter.

Cylinder Lubrication

It is not necessary to remove the fuel injectors from the cylinder head to squirt light lubricating oil into the cylinders for the few months of normal lay-up. However, if you anticipate a longer lay-up period (12 months or more), we recommended that this procedure be performed. The light oil in the cylinders will prevent the pistons rings from sticking to the cylinder walls. Make sure you have replacements for the injector and return line sealing washers.

Spares

Lay-up time provides a good opportunity to inspect your Westerbeke engine to see if external items such as drive belts or coolant hoses need replacement. Check your basic spares kit and order items not on hand, or replace those items used during the lay-up, such as filters and zinc anodes.

Batteries

If batteries are to be left on board during the lay-up period, make sure they are fully charged, and will remain that way, to prevent them from freezing. If there exists any doubt that the batteries will not remain fully charged, or that they will be subjected to severe environmental conditions, remove the batteries and store them in a warmer, more compatible environment.

Recommissioning

The recommissioning of your Westerbeke engine after a seasonal lay-up generally follows the same procedures as those presented in the "PREPARATIONS FOR STARTING" section, page 33, regarding preparation for starting and normal starts. However, some of the lay-up procedures will need to be counteracted before starting the engine.

1. Remove the oil-soaked cloths from the intake manifold and from the through-hull exhaust port.

2. Remove the sea water pump cover and gasket and discard the old gasket. Install the sea water pump impeller removed during lay-up (or a replacement, if required). Install the sea water pump cover with a new cover gasket.

3. Drain the transmission of all oil. Fill the transmission to the proper level with the correct type of oil specified in your engine's "SYSTEM SPECIFICATIONS" section of this manual.

WARNING

Wear rubber gloves, a rubber apron, and eye protection when servicing batteries.

Lead acid batteries emit hydrogen, a highly-explosive gas, which can be ignited by electrical arcing or a lighted cigarette, cigar, or pipe. Do not smoke or allow an open flame near the battery being serviced. Shut off all electrical equipment in the vicinity to prevent electrical arcing during servicing.

3. Reinstall the batteries that were removed during the lay-up, and reconnect the battery cables, making sure the terminals are clean and that the connections are tight. Check to make sure that the batteries are fully-charged.

4. Check the condition of the zinc anode in the sea water circuit and clean or replace the anode as needed. Note that it is not necessary to flush the antifreeze/fresh water solution from the sea water coolant system. When the engine is put into operation, the system will self-flush in a short period of time with no adverse affects.

5. Start the engine in accordance with procedures in the "PREPARATIONS FOR STARTING" section of this manual, page 33.

TABLE OF STANDARD HARDWARE TIGHTENING TORQUES

Unless stated otherwise for a specific assembly, use the following torque values when tightening standard hardware.

	Pitch	lb-ft	kg-m
Grade 4T			
6mm bolt head/nut	1	2.9 - 5.1	0.4 - 0.7
8mm bolt head/nut	1.25	7.2 - 11.6	1.0 - 1.6
10mm bolt head/nut	1.25	13.7 - 22.4	1.9 - 3.1
10mm bolt head/nut	1.5	13.0 - 21.7	1.8 - 3.0
12mm bolt head/nut	1.25 (ISO)	25.3 - 39.8	3.5 - 5.5
12mm bolt head/nut	1.5	25.3 - 39.8	3.5 - 5.5
12mm bolt head/nut	1.75	21.7 - 36.2	3.0 - 5.0
13mm bolt head/nut	1.5	32.5 - 50.6	4.5 - 7.0
14mm bolt head/nut	1.5	36.2 - 57.9	5.0 - 8.0
14mm bolt head/nut	2	34.0 - 55.7	4.7 - 7.7
16mm bolt head/nut	1.5	54.2 - 79.6	7.5 -11.0
16mm bolt head/nut	2	51.4 - 76.7	7.1 -10.6
Grade 6T			
6mm bolt head/nut	1	4.3 - 6.5	0.6 - 0.9
8mm bolt head/nut	1.25	10.8 - 15.9	1.5 - 2.2
l0mm bolt head/nut	1.25	21.7 - 32.5	3.0 - 4.5
10mm bolt head/nut	1.5	19.5 - 30.4	2.7 - 4.2
12mm bolt head/nut	1.25 (ISO)	36.2 - 57.9	5.0 - 8.0
12mm bolt head/nut	1.5	36.2 - 50.6	5.0 - 7.0
12mm bolt head/nut	1.75	34.7 - 49.2	4.8 - 6.8
Grade 7T, 8T and 8.8			
6mm bolt head/nut	1	5.8 - 8.7	0.8 - 1.2
8mm bolt head/nut	1.25	14.5 - 21.7	2.0 - 3.0
10mm bolt head/nut	1.25	28.9 - 39.8	4.0 - 5.5
10mm bolt head/nut	1.5	26.8 - 37.6	3.7 - 5.2
12mm bolt head/nut	1.25 (ISO)	54.2 - 75.9	7.5 -10.5
12mm bolt head/nut	1.5	50.6 - 65.1	7.0 - 9.0
12mm bolt head/nut	1.75	43.4 - 61.5	6.0 - 8.5
13mm bolt head/nut	1.5	57.9 - 86.8	8.0 -12.0
14mm bolt head/nut	1.5	72.3 -108.5	10.0 -15.0
14mm bolt head/nut	2	68.7 -101.3	9.5 - 14.0
16mm bolt head/nut	1.5	108.5 - 166.4	15.0 - 23.0
16mm bolt head/nut	2	101.3 - 159.1	14.0 - 22.0
Grade 5 capscrew			
1/4 UNC		9 - 11	1.2 - 1.5
1/4 UNF		11 - 13	1.5 - 1.8
5/16 UNC		18 - 20	2.5 - 2.8
5/16 UNF		21 - 23	2.9 - 3.2
3/8 UNC		28 - 33	3.7 - 4.6
3/8 UNF		30 - 35	4.1 - 4.8
7/16 UNC		44 - 49	6.1 - 6.8
7/16 UNF		50 - 55	6.9 - 7.6
1/2 UNC		68 - 73	9.4 -10.1
1/2 UNF		73 - 80	10.1 -11.1

TORQUE SPECIFICATIONS

		Lb-ft	Kg-m
Cylinder head bolt	(M10)	50.7 - 57.9	7.0 - 8.0
	(M12)	79.6 - 86.8	11.0 - 120

(See the " **Torquing Cylinder Head Bolts**" section of this manual on page 85.)

Crankshaft pulley nut	108.5 - 180.8	20.0 - 25.0
Main bearing cap bolt	36.2 - 43.4	5.0 - 5.5
Connecting rod cap nut	23.1 - 25.3	3.2 - 3.5
Flywheel bolt - with separate washers	83.2 - 90.4	11.5 - 12.5
Flywheel bolt - washer attached	95.0 - 100.0	13.0 - 14.0
Oil pan drain plug	36.2 - 43.4	5.0 - 6.0
Oil filter	8.0 - 9.4 (or tighten firmly by hand)	1.1 - 1.3
Delivery valve holder (injection pump)	28.9 - 36.2	4.0 - 5.0
Nozzle mounting bolt	10.8 - 14.5	1.5 - 2.0
Nozzle holder and retaining nut	43.4 - 57.9	6.0 - 8.0
Glow plug	10.8 - 14.5	1.5 - 2.0

* NOTE: M8 indicates Metric, 8 mm thread diameter

SPARE PARTS

Since a possibility exists in which the engine may need to be serviced at sea or while in a port other than your home port, certain spare parts should be kept on board to help minimize delays in your voyage. Please refer to your engine's Parts List for part numbers when ordering spare parts.

Listed below are those spare parts that should be carried on board at all times.

1. An Impeller Kit
2. A Fuel System hardware Kit
3. An Electric Fuel Lift Pump Filter and a Secondary Fuel Filter.
4. An Alternator/Sea Water Pump Belt
5. Hose Clamps
6. A Spare Oil Filter with a Spare Quart of Diesel Service Engine Oil along with a Quart of Transmission Oil and a Gallon of Premixed Antifreeze.

Other parts, whose life expectancy cannot be accurately predetermined, should be carried on board (in addition to those listed above) especially if the vessel is to be taken on long ocean voyages. These parts are listed below.

1. Fuel Injectors
2. Glow Plugs
3. Cooling System Hoses
4. An Alternator
5. A Starter
6. A 20 Amp DC Circuit Breaker
7. An Electric Fuel Lift Pump
8. A Sea Water Pump or a Major Overhaul Kit (the pump's part number is found on the cover of the pump).
9. Battery Terminal Connectors

The spare parts listed directly above are those we *recommend* be carried on board during long ocean voyages. You may wish to ask other boat owners who have similar crafts and who have completed long ocean voyages as to what spare parts they carried on board and what parts were needed at specific times of the voyage. From the list provided directly above and from these inquiries, you can determine what spare parts may be needed. In addition, if you are planning a long ocean voyage, consult your local Westerbeke dealer for a listing of the Westerbeke dealers located on your route.

INDEX

A

Adjustment, Injection Pump Timing 88
ADJUSTMENTS, MAINTENANCE AND 82
Adjustment, Valve Clearance (W 35B THREE Engine) 86
Adjustment, Valve Clearance (W 38B FOUR and W 42B FOUR Engines) 87
Admirals Panel 37
Admirals Panel Control Circuit DC Wiring Diagram # 36844 ..... 50 and 51
Alignment of the Engine (Installation Checks) 24
Alternator 46
Alternator and Water Pump Drive Belt Tension 55
ANTIFREEZE CONCENTRATION DATA 53
Automatic Alarm System 31

B

Batteries (Lay-up and Recommissioning) 91
Battery Specification 46
Belt Tension, Alternator and Water Pump Drive 55
Bolts, Engine (Installation Checks) 23
Bolts, Torquing Cylinder Head (W 35B THREE Engine) 85
Bolts, Torquing Cylinder Head (W 38B FOUR and W 42B FOUR Engines) 85
Break-in Procedures, Engine 41

C

CAUTIONS

SHIPPING ENGINE WITHOUT ENGINE OIL 21
LIFTING SLINGS 22
TIGHTENING THE EXHAUST ELBOW CLAMP 29
THROUGH-HULL FITTINGS 30
PROLONGED ENGINE CRANKING 39
SHUTTING DOWN THE ENGINE 41
PROLONGED ENGINE CRANKING 44
BATTERY CIRCUIT 46
QUICK-CHARGING THE BATTERIES 46
TESTING THE ALTERNATOR 46
EXCESSIVE BELT TENSION 55
TRANSMISSION GEAR BOX LEVER COVER BOLTS 65
ADJUSTING VALVE CLEARANCES 86
ADJUSTING VALVE CLEARANCES 87
LEAVING OLD ENGINE OIL IN SUMP OVER LAY-UP 90

Captains Panel 35
Captains Panel Control Circuit DC Wiring Diagram # 36467 ..... 48 and 49
Change, Engine Oil, (to include filter) 61
Charging Voltage Test 47
CHECKS, INSTALLATION 21

Circuit, Fresh Water 52
Circuit, Sea Water 55
Clearance Adjustment, Valve (W 35B THREE Engine) 86
Clearance Adjustment, Valve (W 38B FOUR and W 42B FOUR Engines) 87
Connecting Pressure Sensing Devices to Oil Galleries (Installation Checks) 30
CONTENTS, TABLE OF 3
Cooling (JS Transmission) 65
COOLING SYSTEM 52
Cooling System (Installation Checks) 30
Controls (JS Transmission) 64
Coupling, Propeller Shaft (Installation Checks) 24
Coupling, Propeller Shaft (Lay-up and Recommissioning) 89
Cylinder Head Bolts, Torquing (W 35B THREE Engine) 85
Cylinder Head Bolts, Torquing (W 38B FOUR and W 42B FOUR Engines) 85
Cylinder Lubrication (Lay-up and Recommissioning) 91

D

DC Wiring Diagram # 36844, Admirals Panel Control Circuit ..... 50 and 51
DC Wiring Diagram # 36467, Captains Panel Control Circuit ..... 48 and 49
DESCRIPTION OF INSTRUMENT PANELS 35
Description of Starting System 34
Diesel Engine, Understanding the 5
Diesel Fuel 43
DISCLAIMER, IMPORTANT PRODUCT SOFTWARE 1
Domestic Hot Water 58
Drain Hose, Oil (Installation Checks) 30

E

ELECTRICAL SYSTEM 46
Electrical System (Installation Checks) 32
Engine, Alignment of the (Installation Checks) 24
Engine Bolts (Installation Checks) 23
Engine Break-in Procedures 41
Engine, Diesel, Understanding the 5
Engine, Foundation for the (Installation Checks) 23
Engine Lubrication System (Lay-up and Recommissioning) 89
Engine Oil 60
Engine Oil Change (to include filter) 61
Engine Oil Viscosity (SAE Number) 60
ENGINE TROUBLESHOOTING 79
Equipment, Inspection of 2
Exhaust Back-Pressure (Installation Checks) 27
Exhaust Elbow Installation (Installation Checks) 29
Exhaust System (Installation Checks) 26
Exhaust System Failures (Installation Checks) 28

F

FORWARD....2
Foundation for the Engine (Installation Checks)....23
Fresh Water Circuit....52
Fresh Water Cooling System (Lay-up and Recommissioning)....89
Fuel, Diesel....43
Fuel Filters....43
Fuel Filter Elements, Replacing....44
Fuel Injection Pump....45
Fuel System (Installation Checks)....31
Fuel System (Lay-up and Recommissioning)....90
Fuel System, Priming the....44
FUEL SYSTEM....43

G

GENERAL....5
GENERAL SPECIFICATIONS W 35B....12
GENERAL SPECIFICATIONS W 38B....15
GENERAL SPECIFICATIONS W 42B....18

H

HARDWARE TIGHTENING TORQUES, TABLE OF STANDARD....93
Head Bolts, Torquing Cylinder (W 35B THREE Engine)....85
Head Bolts, Torquing Cylinder (W 38B FOUR and W 42B FOUR Engines)....85
Hose, Oil Drain (Installation Checks)....30
Hot Water, Domestic....58
Hydraulic Transmissions, Warner....68

I

IMPORTANT PRODUCT SOFTWARE DISCLAIMER....1
INDEX....96
Injection Pump, Fuel....45
Injection Pump Timing Adjustment....88
Inspection of Equipment....2
INSTALLATION CHECKS....21
INSTRUMENT PANELS, DESCRIPTION OF....35
Intake Manifold and Through-Hull Exhaust (Lay-up and Recommissioning)....91
Intake System, Sea Water (Installation Checks)....31

J

JS Transmission....63

L

LAY-UP AND RECOMMISSIONING 89
Lifting, Rigging and (Installation Checks) 22
Location (Installation Checks) 21
Lubrication (JS Transmission) 63
LUBRICATION SYSTEM 60

M

MAINTENANCE AND ADJUSTMENTS 69
Motor, Starter (Lay-up and Recommissioning) 91

O

Oil Change (to include filter), Engine 61
Oil Drain Hose (Installation Checks) 30
Oil, Engine 60
Oil, Engine, Viscosity (SAE Number) 60
Oil Galleries, Connecting Pressure Sensing Devices to (Installation Checks) 30
Oil Pressure 60
OPTIONAL TRANSMISSIONS 66
Ordering Parts 5

P

Panel, Admirals 37
Panel, Captains 35
PANELS, DESCRIPTION OF INSTRUMENT 35
Parts, Ordering 5
PARTS, SPARE 95
PREPARATION FOR STARTING 33
Pressure, Oil 60
Pressure Sensing Devices to Oil Galleries, Connecting (Installation Checks) 30
Priming the Fuel System 44
PROCEDURE, STARTING 39
PROCEDURE, STOPPING 41
PRODUCT SOFTWARE DISCLAIMER, IMPORTANT 1
Propeller (Installation Checks) 24
Propeller Shaft Coupling (Installation Checks) 24
Propeller Shaft Coupling (Lay-up and Recommissioning) 89
Pump, Fuel Injection 45
Pump, Sea Water 55
Pump Timing Adjustment, Injection 88

R

Recommissioning (Lay-up and Recommissioning) 91
Replacing the Fuel Filter Elements....44
Rigging and Lifting (Installation Checks) 22

S

Sailing Operation (JS Transmission) 65
Service (JS Transmission)....65
Sea Water Circuit....55
Sea Water Circuit (Lay-up and Recommissioning) 90
Sea Water Pump....55
Sea Water Intake System (Installation Checks)....31
Shaft Coupling, Propeller (Installation Checks)....24
Shaft Coupling, Propeller (Lay-up and Recommissioning)....89
Shifting (JS Transmission)....65
SOFTWARE DISCLAIMER, IMPORTANT, PRODUCT 1
Spares (Lay-up and Recommissioning) 91
SPARE PARTS 95
Starter Motor (Lay-up and Recommissioning) 91
STARTING, PREPARATION FOR....33
STARTING PROCEDURE 39
Starting System, Description of....34
Starting Under Cold Conditions 42
Starting Under Normal Conditions....42
STOPPING PROCEDURE 41
SYSTEM SPECIFICATIONS W 35B 13
SYSTEM SPECIFICATIONS W 38B 16
SYSTEM SPECIFICATIONS W 42B 19

T

TABLE OF CONTENTS....3
TABLE OF STANDARD HARDWARE TIGHTENING TORQUES 93
Test, Charging Voltage 47
Timing Adjustment, Injection Pump....88
Thermostat....54
TORQUE SPECIFICATIONS....94
Torquing Cylinder Head Bolts (W 35B THREE Engine) 85
Torquing Cylinder Head Bolts (W 38B FOUR and W 42B FOUR Engines)....85
Transmission Lubrication System (Lay-up and Recommissioning) 90
TRANSMISSIONS, OPTIONAL....66
Transmissions, Warner Hydraulic 68
TROUBLESHOOTING, ENGINE 79

U

Under Cold Conditions, Starting 42
Under Normal Conditions, Starting 42
Understanding the Diesel Engine 5

V

Valve Clearance Adjustment (W 35B THREE Engine) 86
Valve Clearance Adjustment (W 38B FOUR and W 42B FOUR Engines) 87
V-Drives 73
Ventilation 32
Viscosity (SAE Number), Engine Oil 60
Voltage Test, Charging 47

W

WARNINGS

DIESEL FUMES 28
FLAMES NEAR BATTERIES 32
SERVICING BATTERIES 32
ADJUSTING DRIVE BELT TENSION 55
SERVICING BATTERIES 92

Walter V-Drives 73
Warner Hydraulic Transmissions 68
Water, Domestic Hot 58
Water, Fresh, Circuit 52
Water, Sea, Circuit 55
Water Intake System, Sea (Installation Checks) 31
Water Pump, Sea 55
Water Pump Belt Tension, Alternator and 55
Wiring Diagram # 36844, Admirals Panel Control Circuit DC ..... 50 and 51
Wiring Diagram # 36467, Captains Panel Control Circuit DC ..... 48 and 49

YOUR NOTES

YOUR NOTES

YOUR NOTES